PHILIPS

RC160V

RC160B

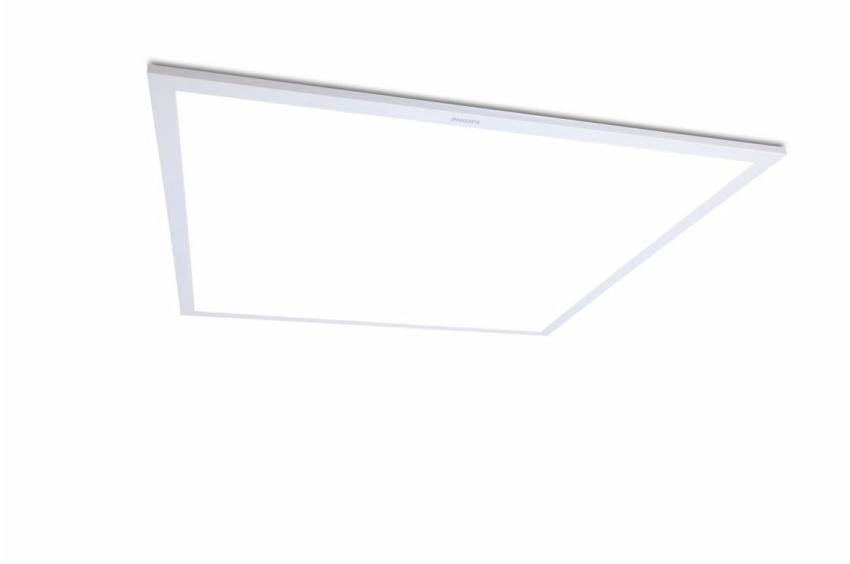

Slim and reliable

GreenPerform Panel RC160V is an edge lit slim panel with high efficacy in the market. It offers 3 typical dimensions: 600x600; 300x1200 and 600x1200mm to fit most of indoor applications. Its lower UGR offers better visual comfort as well. In addition, RC160V offers easy connection to control system to bring better energy saving.

Benefits

- High lm/w provides better energy saving
- Dali and Interact interfaces available for easy internet connection
- Lower UGR offer for WELL building certificate
- Multiple mountings to cater for various applications

Features

- System efficiency: max 130lm/W
- CRI 80 and 90 available with SDCM 4
- UGR19 / 16 available for certain types
- IP54 front/IP20 back available for certain types

Applications

- Open plan office
- Public indoor area
- Meeting/training room

Versions



GreenPerform panel



GreenPerform panel

GreenPerform panel

Dimensional drawing

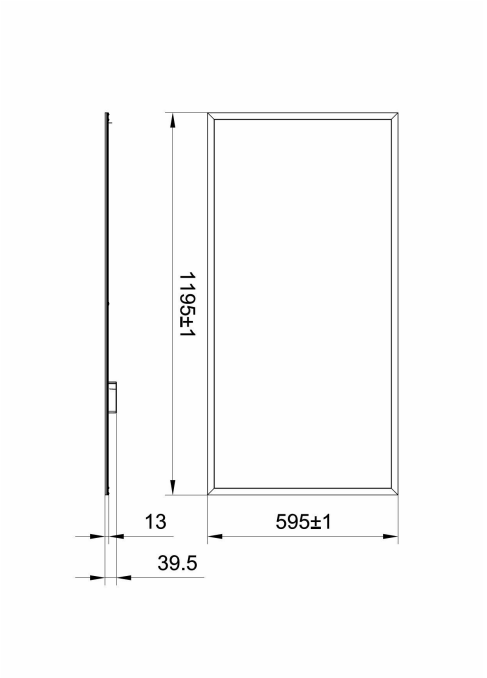

RC160V LED60/865 W60L120 PSU OC

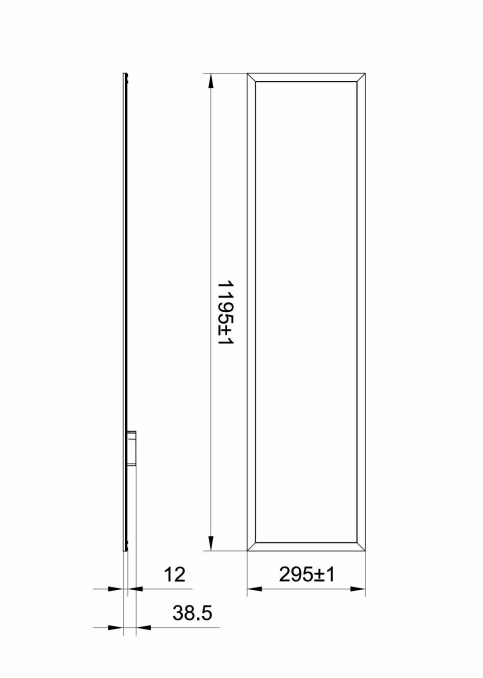

RC160V LED39/865 W30L120 PSU OC

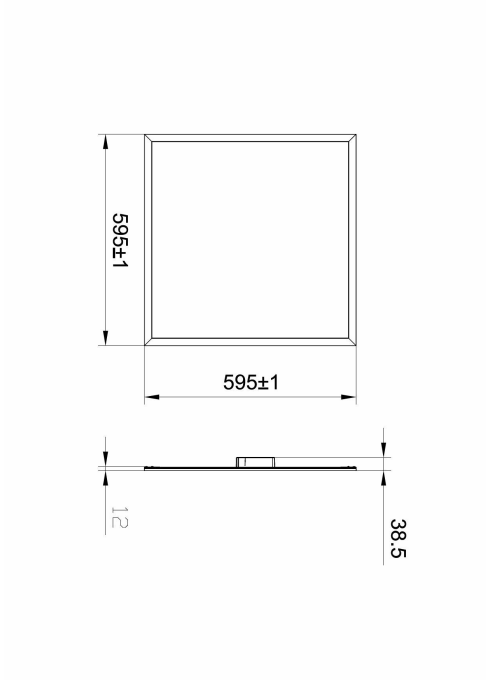

RC160X LED29/865 W60L60 WIA 16 CAU

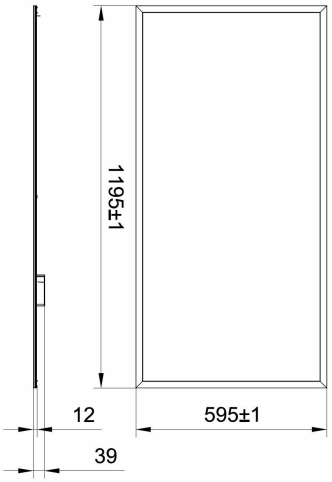

RC160V LED58/965 W60L120 PSD

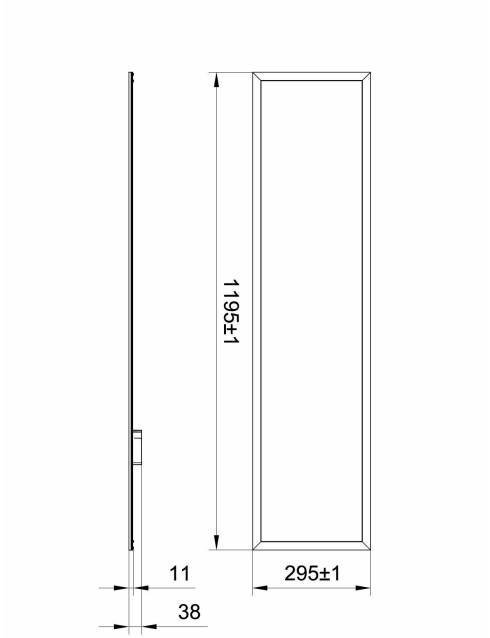

RC160V LED35/930 W30L120 PSU 54 CAU

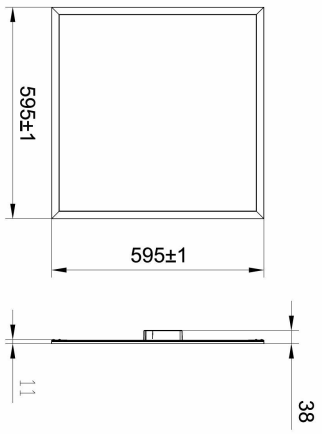

RC160V LED37/965 W60L60 PSU 54

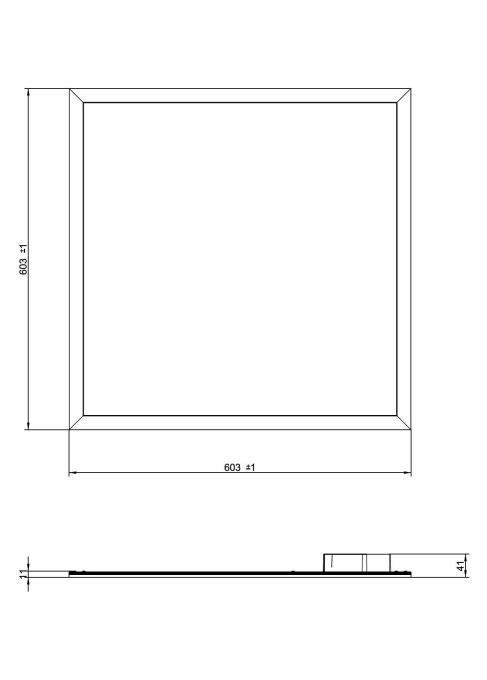

RC160V LED39/865 W603L603 PSU UVG

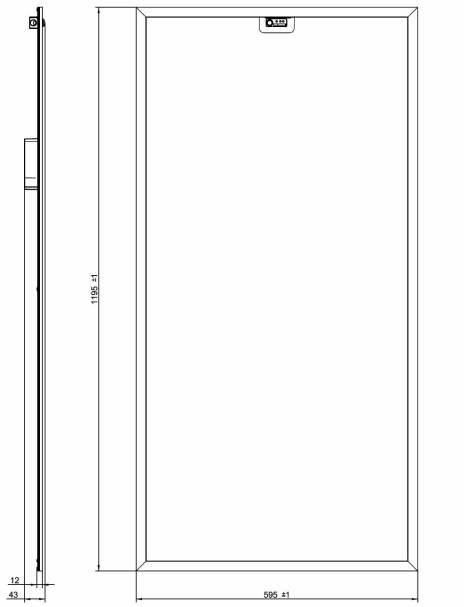

RC160X LED54/930 W60L120 SIA CAU

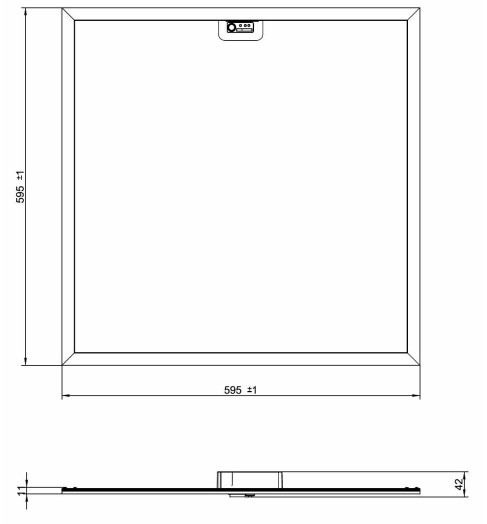

RC160X LED35/930 W60L60 SIA CAU

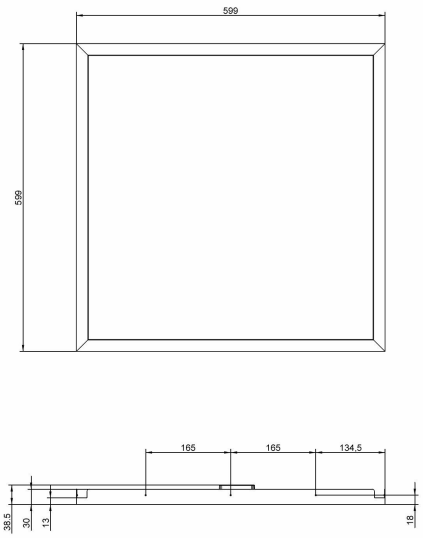

RC160V LED39/865 W60L60 PSU OC CPC

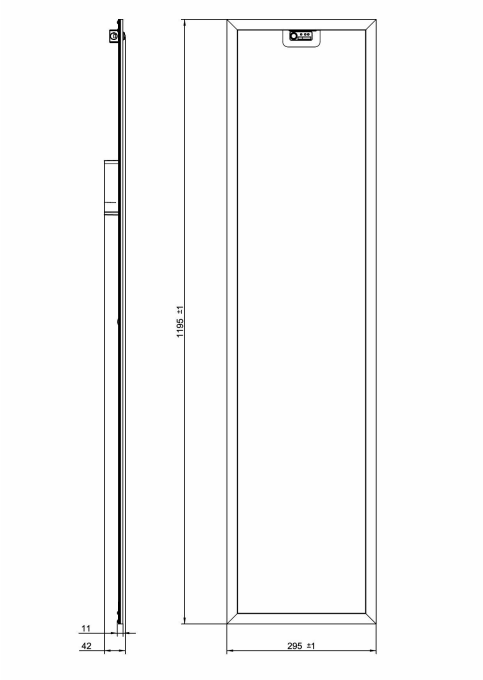

RC160X LED37/830 W30L120 SIA CAU

General Information

Number of gear units	1 unit
Gear	-
Driver included	Yes
Service tag	Yes

Light Technical

Optic type	Beam angle 100°

Operating and Electrical

Line Frequency	50 to 60 Hz
Suitable for random switching	Not applicable
Protection class IEC	Safety class II

Controls and Dimming

Maximum dim level	0% (digital)

Mechanical and Housing

Housing Color	White RAL 9003
Optical cover type	PS

Approval and Application

Glow-wire test	Temperature 650 °C, duration 30 s
Flammability mark	-
CE mark	Yes
ENEC mark	-
Ambient temperature range	-20 to +40 °C

Light Technical

Order Code	Full Product Name	Luminous Flux	Correlated Color Temperature (Nom)	Luminous Efficacy (rated) (Nom)	Color rendering index (CRI)	Number of light sources
911401524932	RC160X LED39/840 W30L120 SIA	3,900 lm	4000 K	130 lm/W	80	288
911401528432	RC160X LED37/830 W30L120 SIA CAU	3,700 lm	3000 K	122 lm/W	80	288
911401528632	RC160X LED39/865 W30L120 SIA CAU	3,900 lm	6500 K	130 lm/W	80	288
911401531647	RC160V LED37/830 W30L120 PSU	3,810 lm	3000 K	127 lm/W	≥80	-
911401531747	RC160V LED39/840 W30L120 PSU	4,050 lm	4000 K	135 lm/W	≥80	-
911401531847	RC160V LED39/865 W30L120 PSU	4,050 lm	6500 K	135 lm/W	≥80	-
911401532547	RC160V LED37/830 W30L120 PSU OC	3,810 lm	3000 K	127 lm/W	≥80	-
911401532647	RC160V LED39/840 W30L120 PSU OC	4,050 lm	4000 K	135 lm/W	≥80	-
911401532747	RC160V LED39/865 W30L120 PSU OC	4,050 lm	6500 K	135 lm/W	≥80	-
911401537047	RC160V LED37/830 W30L120 PSD	3,810 lm	3000 K	127 lm/W	≥80	-
911401537147	RC160V LED39/840 W30L120 PSD	4,050 lm	4000 K	135 lm/W	≥80	-
911401537247	RC160V LED39/865 W30L120 PSD	4,050 lm	6500 K	135 lm/W	≥80	-
911401543432	RC160X LED35/930 W30L120 SIA CAU	3,500 lm	3000 K	118 lm/W	80	288
911401543532	RC160X LED37/940 W30L120 SIA CAU	3,750 lm	4000 K	126 lm/W	80	288
911401543632	RC160X LED37/965 W30L120 SIA CAU	3,750 lm	6500 K	126 lm/W	80	288
911401550247	RC160V LED35/930 W30L120 PSU	3,620 lm	3000 K	120 lm/W	≥90	-
911401550347	RC160V LED37/940 W30L120 PSU	3,850 lm	4000 K	128 lm/W	≥90	-
911401550447	RC160V LED37/965 W30L120 PSU	3,850 lm	6500 K	128 lm/W	≥90	-
911401552047	RC160V LED35/930 W30L120 PSD	3,620 lm	3000 K	120 lm/W	≥90	-
911401552147	RC160V LED37/940 W30L120 PSD	3,850 lm	4000 K	128 lm/W	≥90	-
911401552247	RC160V LED37/965 W30L120 PSD	3,850 lm	6500 K	128 lm/W	≥90	-
911401552947	RC160X LED35/930 W30L120 WIA	3,620 lm	3000 K	120 lm/W	≥90	-
911401553047	RC160X LED37/940 W30L120 WIA	3,850 lm	4000 K	128 lm/W	≥90	-
911401553147	RC160X LED37/965 W30L120 WIA	3,850 lm	6500 K	128 lm/W	≥90	-
911401554447	RC160V LED35/930 W30L120 PSD CAU	3,620 lm	3000 K	120 lm/W	≥90	-
911401554547	RC160V LED37/940 W30L120 PSD CAU	3,850 lm	4000 K	128 lm/W	≥90	-
911401554647	RC160V LED37/965 W30L120 PSD CAU	3,850 lm	6500 K	128 lm/W	≥90	-
911401555347	RC160X LED35/930 W30L120 WIA CAU	3,620 lm	3000 K	120 lm/W	≥90	-
911401555447	RC160X LED37/940 W30L120 WIA CAU	3,850 lm	4000 K	128 lm/W	≥90	-
911401555547	RC160X LED37/965 W30L120 WIA CAU	3,850 lm	6500 K	128 lm/W	≥90	-
911401555947	RC160V LED35/930 W30L120 PSU 54 CAU	3,620 lm	3000 K	120 lm/W	≥90	-

Order Code	Full Product Name	Luminous Flux	Correlated Color Temperature (Nom)	Luminous Efficacy (rated) (Nom)	Color rendering index (CRI)	Number of light sources
911401556047	RC160V LED37/940 W30L120 PSU 54 CAU	3,850 lm	4000 K	128 lm/W	≥90	-
911401556147	RC160V LED37/965 W30L120 PSU 54 CAU	3,850 lm	6500 K	128 lm/W	≥90	-
911401557447	RC190V LED34/930 W30L120 PSD OC 54 CAU	3,530 lm	3000 K	117 lm/W	≥90	-
911401557547	RC190V LED34/935 W30L120 PSD OC 54 CAU	3,530 lm	3500 K	117 lm/W	≥90	-
911401557647	RC190V LED36/940 W30L120 PSD OC 54 CAU	3,750 lm	4000 K	125 lm/W	≥90	-
911401558147	RC160V LED38/8TW W30L120	3,970 lm	Tunable white 2700-5000 K	132 lm/W	≥80	-
911401558347	RC160V LED37/9TW W30L120	3,770 lm	Tunable white 2700-5000 K	125 lm/W	≥90	-
911401558547	RC160V LED37/9TW W30L120 54	3,770 lm	Tunable white 2700-5000 K	125 lm/W	≥90	-
911401558747	RC160V LED37/9TW W30L120 CAU	3,770 lm	Tunable white 2700-5000 K	125 lm/W	≥90	-
911401563147	RC190X LED36/940 W30L120 WIA OC CAU	3,750 lm	4000 K	125 lm/W	≥90	-
911401563447	SP160P LED37/940 W30L120 PSU	3,850 lm	4000 K	128 lm/W	≥90	-
911401563647	SP160P LED37/940 W30L120 PSU OC	3,850 lm	4000 K	128 lm/W	≥90	-
911401563847	SP160P LED37/940 W30L120 PSD	3,850 lm	4000 K	128 lm/W	≥90	-
911401564047	SP160P LED37/940 W30L120 PSD OC	3,850 lm	4000 K	128 lm/W	≥90	-
911401564247	SP160P LED37/940 W30L120 PSU CN	3,850 lm	4000 K	128 lm/W	≥90	-
911401564447	SP160P LED37/940 W30L120 PSU OC CN	3,850 lm	4000 K	128 lm/W	≥90	-
911401564647	SP160P LED37/940 W30L120 PSD CN	3,850 lm	4000 K	128 lm/W	≥90	-
911401564847	SP160P LED37/940 W30L120 PSD OC CN	3,850 lm	4000 K	128 lm/W	≥90	-
911401565047	RC160V LED39/840 W30L120 PSU CN	4,050 lm	4000 K	135 lm/W	≥80	-
911401565347	RC160V LED39/840 W30L120 PSU OC CN	4,050 lm	4000 K	135 lm/W	≥80	-
911401565647	RC160V LED39/840 W30L120 PSU 54 CN	4,050 lm	4000 K	135 lm/W	≥80	-
911401566147	RC160V LED39/840 W30L120 PSD CN	4,050 lm	4000 K	135 lm/W	≥80	-
911401566447	RC160X LED39/840 W30L120 WIA CN	4,050 lm	4000 K	135 lm/W	≥80	-
911401528732	RC160X LED57/830 W60L120 SIA CAU	5,700 lm	3000 K	123 lm/W	80	384
911401528932	RC160X LED60/865 W60L120 SIA CAU	6,000 lm	6500 K	131 lm/W	80	384
911401531947	RC160V LED57/830 W60L120 PSU	5,930 lm	3000 K	128 lm/W	≥80	-
911401532047	RC160V LED60/840 W60L120 PSU	6,310 lm	4000 K	137 lm/W	≥80	-
911401532147	RC160V LED60/865 W60L120 PSU	6,310 lm	6500 K	137 lm/W	≥80	-
911401532847	RC160V LED57/830 W60L120 PSU OC	5,930 lm	3000 K	128 lm/W	≥80	-
911401532947	RC160V LED60/840 W60L120 PSU OC	6,310 lm	4000 K	137 lm/W	≥80	-
911401533047	RC160V LED60/865 W60L120 PSU OC	6,310 lm	6500 K	137 lm/W	≥80	-
911401537347	RC160V LED57/830 W60L120 PSD	5,930 lm	3000 K	128 lm/W	≥80	-
911401537447	RC160V LED60/840 W60L120 PSD	6,310 lm	4000 K	137 lm/W	≥80	-
911401537547	RC160V LED60/865 W60L120 PSD	6,310 lm	6500 K	137 lm/W	≥80	-
911401543732	RC160X LED54/930 W60L120 SIA CAU	5,450 lm	3000 K	119 lm/W	80	384
911401543832	RC160X LED58/940 W60L120 SIA CAU	5,800 lm	4000 K	126 lm/W	80	384
911401543932	RC160X LED58/965 W60L120 SIA CAU	5,800 lm	6500 K	126 lm/W	80	384
911401550547	RC160V LED54/930 W60L120 PSU	5,630 lm	3000 K	122 lm/W	≥90	-

Order Code	Full Product Name	Luminous Flux	Correlated Color Temperature (Nom)	Luminous Efficacy (rated) (Nom)	Color rendering index (CRI)	Number of light sources
911401550647	RC160V LED58/940 W60L120 PSU	5,990 lm	4000 K	130 lm/W	≥90	-
911401550747	RC160V LED58/965 W60L120 PSU	5,990 lm	6500 K	130 lm/W	≥90	-
911401552347	RC160V LED54/930 W60L120 PSD	5,630 lm	3000 K	122 lm/W	≥90	-
911401552447	RC160V LED58/940 W60L120 PSD	5,990 lm	4000 K	130 lm/W	≥90	-
911401552547	RC160V LED58/965 W60L120 PSD	5,990 lm	6500 K	130 lm/W	≥90	-
911401554747	RC160V LED54/930 W60L120 PSD CAU	5,630 lm	3000 K	122 lm/W	≥90	-
911401554847	RC160V LED58/940 W60L120 PSD CAU	5,990 lm	4000 K	130 lm/W	≥90	-
911401554947	RC160V LED58/965 W60L120 PSD CAU	5,990 lm	6500 K	130 lm/W	≥90	-
911401556247	RC160V LED54/930 W60L120 PSU 54 CAU	5,630 lm	3000 K	122 lm/W	≥90	-
911401556347	RC160V LED58/940 W60L120 PSU 54 CAU	5,990 lm	4000 K	130 lm/W	≥90	-
911401556447	RC160V LED58/965 W60L120 PSU 54 CAU	5,990 lm	6500 K	130 lm/W	≥90	-
911401556547	RC160X LED48/930 W60L120 WIA	4,940 lm	3000 K	123 lm/W	≥90	-
911401556647	RC160X LED51/940 W60L120 WIA	5,250 lm	4000 K	131 lm/W	≥90	-
911401556747	RC160X LED51/965 W60L120 WIA	5,250 lm	6500 K	131 lm/W	≥90	-
911401556847	RC160X LED48/930 W60L120 WIA CAU	4,940 lm	3000 K	123 lm/W	≥90	-
911401556947	RC160X LED51/940 W60L120 WIA CAU	5,250 lm	4000 K	131 lm/W	≥90	-
911401557047	RC160X LED51/965 W60L120 WIA CAU	5,250 lm	6500 K	131 lm/W	≥90	-
911401557847	RC190V LED37/935 W60L120 PSD OC 54 CAU	3,770 lm	3500 K	125 lm/W	≥90	-
911401557947	RC190V LED40/940 W60L120 PSD OC 54 CAU	4,010 lm	4000 K	133 lm/W	≥90	-
911401563247	RC190X LED40/940 W60L120 WIA OC CAU	4,010 lm	4000 K	133 lm/W	≥90	-
911401565147	RC160V LED60/840 W60L120 PSU CN	6,310 lm	4000 K	137 lm/W	≥80	-
911401565747	RC160V LED60/840 W60L120 PSU 54 CN	6,310 lm	4000 K	137 lm/W	≥80	-
911401566247	RC160V LED60/840 W60L120 PSD CN	6,310 lm	4000 K	137 lm/W	≥80	-
911401509832	RC160V LED37/830 W60L60 PSU	3,700 lm	3000 K	122 lm/W	80	240
911401528132	RC160X LED37/830 W60L60 SIA CAU	3,700 lm	3000 K	122 lm/W	80	240
911401528332	RC160X LED39/865 W60L60 SIA CAU	3,900 lm	6500 K	130 lm/W	80	240
911401531347	RC160V LED37/830 W60L60 PSU	3,810 lm	3000 K	126 lm/W	≥90	-
911401531447	RC160V LED39/840 W60L60 PSU	4,050 lm	4000 K	135 lm/W	≥80	-
911401531547	RC160V LED39/865 W60L60 PSU	4,050 lm	6500 K	135 lm/W	≥80	-
911401532247	RC160V LED37/830 W60L60 PSU OC	3,810 lm	3000 K	126 lm/W	≥80	-
911401532347	RC160V LED39/840 W60L60 PSU OC	4,050 lm	4000 K	135 lm/W	≥80	-
911401532447	RC160V LED39/865 W60L60 PSU OC	4,050 lm	6500 K	135 lm/W	≥80	-
911401533147	RC160V LED27/830 W60L60 PSU 16	2,790 lm	3000 K	123 lm/W	≥80	-
911401533247	RC160V LED29/840 W60L60 PSU 16	2,970 lm	4000 K	131 lm/W	≥80	-
911401533347	RC160V LED29/865 W60L60 PSU 16	2,970 lm	6500 K	131 lm/W	≥80	-
911401534047	RC160V LED37/830 W60L60 PSU 54	3,810 lm	3000 K	126 lm/W	≥80	-
911401534147	RC160V LED39/840 W60L60 PSU 54	4,050 lm	4000 K	135 lm/W	≥80	-
911401534247	RC160V LED39/865 W60L60 PSU 54	4,050 lm	6500 K	135 lm/W	≥80	-
911401534947	RC160V LED37/830 W60L60 PSU OC 54	3,810 lm	3000 K	126 lm/W	≥80	-
911401535047	RC160V LED39/840 W60L60 PSU OC 54	4,050 lm	4000 K	135 lm/W	≥80	-
911401535147	RC160V LED39/865 W60L60 PSU OC 54	4,050 lm	6500 K	135 lm/W	≥80	-
911401535847	RC160V LED27/830 W60L60 PSU 16 54	2,790 lm	3000 K	123 lm/W	≥80	-

Order Code	Full Product Name	Luminous Flux	Correlated Color Temperature (Nom)	Luminous Efficacy (rated) (Nom)	Color rendering index (CRI)	Number of light sources
911401535947	RC160V LED29/840 W60L60 PSU 16 54	2,970 lm	4000 K	131 lm/W	≥80	-
911401536047	RC160V LED29/865 W60L60 PSU 16 54	2,970 lm	6500 K	131 lm/W	≥80	-
911401536747	RC160V LED37/830 W60L60 PSD	3,810 lm	3000 K	126 lm/W	≥80	-
911401536847	RC160V LED39/840 W60L60 PSD	4,050 lm	4000 K	135 lm/W	≥80	-
911401536947	RC160V LED39/865 W60L60 PSD	4,050 lm	6500 K	135 lm/W	≥80	-
911401537647	RC160V LED37/830 W60L60 PSD OC	3,810 lm	3000 K	126 lm/W	≥80	-
911401537747	RC160V LED39/840 W60L60 PSD OC	4,050 lm	4000 K	135 lm/W	≥80	-
911401537847	RC160V LED39/865 W60L60 PSD OC	4,050 lm	6500 K	135 lm/W	≥80	-
911401538547	RC160V LED27/830 W60L60 PSD 16	2,790 lm	3000 K	123 lm/W	≥80	-
911401538647	RC160V LED29/840 W60L60 PSD 16	2,970 lm	4000 K	131 lm/W	≥80	-
911401538747	RC160V LED29/865 W60L60 PSD 16	2,970 lm	6500 K	131 lm/W	≥80	-
911401539447	RC160X LED37/830 W60L60 WIA	3,810 lm	3000 K	126 lm/W	≥80	-
911401539547	RC160X LED39/840 W60L60 WIA	4,050 lm	4000 K	135 lm/W	≥80	-
911401539647	RC160X LED39/865 W60L60 WIA	4,050 lm	6500 K	135 lm/W	≥80	-
911401540047	RC160X LED37/830 W60L60 WIA OC	3,810 lm	3000 K	126 lm/W	≥80	-
911401540147	RC160X LED39/840 W60L60 WIA OC	4,050 lm	4000 K	135 lm/W	≥80	-
911401540247	RC160X LED39/865 W60L60 WIA OC	4,050 lm	6500 K	135 lm/W	≥80	-
911401540647	RC160V LED37/830 W60L60 PSU CAU	3,810 lm	3000 K	126 lm/W	≥80	-
911401540747	RC160V LED39/840 W60L60 PSU CAU	4,050 lm	4000 K	135 lm/W	≥80	-
911401540847	RC160V LED39/865 W60L60 PSU CAU	4,050 lm	6500 K	135 lm/W	≥80	-
911401541547	RC160V LED37/830 W60L60 PSD CAU	3,810 lm	3000 K	126 lm/W	≥80	-
911401541647	RC160V LED39/840 W60L60 PSD CAU	4,050 lm	4000 K	135 lm/W	≥80	-
911401541747	RC160V LED39/865 W60L60 PSD CAU	4,050 lm	6500 K	135 lm/W	≥80	-
911401542447	RC160X LED37/830 W60L60 WIA CAU	3,810 lm	3000 K	126 lm/W	≥80	-
911401542547	RC160X LED39/840 W60L60 WIA CAU	4,050 lm	4000 K	135 lm/W	≥80	-
911401542647	RC160X LED39/865 W60L60 WIA CAU	4,050 lm	6500 K	135 lm/W	≥80	-
911401543047	RC160V LED37/830 W60L60 PSU OC CAU	3,810 lm	3000 K	126 lm/W	≥80	-
911401543132	RC160X LED35/930 W60L60 SIA CAU	3,500 lm	3000 K	118 lm/W	80	240
911401543147	RC160V LED39/840 W60L60 PSU OC CAU	4,050 lm	4000 K	135 lm/W	≥80	-
911401543232	RC160X LED37/940 W60L60 SIA CAU	3,750 lm	4000 K	125 lm/W	80	240
911401543247	RC160V LED39/865 W60L60 PSU OC CAU	4,050 lm	6500 K	135 lm/W	≥80	-
911401543332	RC160X LED37/965 W60L60 SIA CAU	3,750 lm	6500 K	125 lm/W	80	240
911401543947	RC160V LED37/830 W60L60 PSD OC CAU	3,810 lm	3000 K	126 lm/W	≥80	-
911401544047	RC160V LED39/840 W60L60 PSD OC CAU	4,050 lm	4000 K	135 lm/W	≥80	-
911401544147	RC160V LED39/865 W60L60 PSD OC CAU	4,050 lm	6500 K	135 lm/W	≥80	-
911401544847	RC160X LED37/830 W60L60 WIA OC CAU	3,810 lm	3000 K	126 lm/W	≥80	-
911401544947	RC160X LED39/840 W60L60 WIA OC CAU	4,050 lm	4000 K	135 lm/W	≥80	-
911401545047	RC160X LED39/865 W60L60 WIA OC CAU	4,050 lm	6500 K	135 lm/W	≥80	-
911401545147	RC160V LED27/830 W60L60 PSU 16 CAU	2,790 lm	3000 K	123 lm/W	≥80	-
911401545247	RC160V LED29/840 W60L60 PSU 16 CAU	2,970 lm	4000 K	131 lm/W	≥80	-
911401545347	RC160V LED29/865 W60L60 PSU 16 CAU	2,970 lm	6500 K	131 lm/W	≥80	-
911401546047	RC160V LED27/830 W60L60 PSD 16 CAU	2,790 lm	3000 K	123 lm/W	≥80	-

Order Code	Full Product Name	Luminous Flux	Correlated Color Temperature (Nom)	Luminous Efficacy (rated) (Nom)	Color rendering index (CRI)	Number of light sources
911401546147	RC160V LED29/840 W60L60 PSD 16 CAU	2,970 lm	4000 K	131 lm/W	≥80	-
911401546247	RC160V LED29/865 W60L60 PSD 16 CAU	2,970 lm	6500 K	131 lm/W	≥80	-
911401546947	RC160X LED27/830 W60L60 WIA 16 CAU	2,790 lm	3000 K	123 lm/W	≥80	-
911401547047	RC160X LED29/840 W60L60 WIA 16 CAU	2,970 lm	4000 K	131 lm/W	≥80	-
911401547147	RC160X LED29/865 W60L60 WIA 16 CAU	2,970 lm	6500 K	131 lm/W	≥80	-
911401548147	RC160V LED37/830 W60L60 PSU OC 54 CAU	3,810 lm	3000 K	126 lm/W	≥80	-
911401548247	RC160V LED39/840 W60L60 PSU OC 54 CAU	4,050 lm	4000 K	135 lm/W	≥80	-
911401548347	RC160V LED39/865 W60L60 PSU OC 54 CAU	4,050 lm	6500 K	135 lm/W	≥80	-
911401549047	RC160V LED27/830 W60L60 PSU 16 54 CAU	2,790 lm	3000 K	123 lm/W	≥80	-
911401549147	RC160V LED29/840 W60L60 PSU 16 54 CAU	2,970 lm	4000 K	131 lm/W	≥80	-
911401549247	RC160V LED29/865 W60L60 PSU 16 54 CAU	2,970 lm	6500 K	131 lm/W	≥80	-
911401549947	RC160V LED35/930 W60L60 PSU	3,610 lm	3000 K	120 lm/W	≥90	-
911401550047	RC160V LED37/940 W60L60 PSU	3,850 lm	4000 K	128 lm/W	≥90	-
911401550147	RC160V LED37/965 W60L60 PSU	3,850 lm	6500 K	128 lm/W	≥90	-
911401550847	RC160V LED35/930 W60L60 PSU 54	3,610 lm	3000 K	120 lm/W	≥90	-
911401550947	RC160V LED37/940 W60L60 PSU 54	3,850 lm	4000 K	128 lm/W	≥90	-
911401551047	RC160V LED37/965 W60L60 PSU 54	3,850 lm	6500 K	128 lm/W	≥90	-
911401551747	RC160V LED35/930 W60L60 PSD	3,610 lm	3000 K	120 lm/W	≥90	-
911401551847	RC160V LED37/940 W60L60 PSD	3,850 lm	4000 K	128 lm/W	≥90	-
911401551947	RC160V LED37/965 W60L60 PSD	3,850 lm	6500 K	128 lm/W	≥90	-
911401552647	RC160X LED35/930 W60L60 WIA	3,610 lm	3000 K	120 lm/W	≥90	-
911401552747	RC160X LED37/940 W60L60 WIA	3,850 lm	4000 K	128 lm/W	≥90	-
911401552847	RC160X LED37/965 W60L60 WIA	3,850 lm	6500 K	128 lm/W	≥90	-
911401553247	RC160V LED35/930 W60L60 PSU CAU	3,610 lm	3000 K	120 lm/W	≥90	-
911401553347	RC160V LED37/940 W60L60 PSU CAU	3,850 lm	4000 K	128 lm/W	≥90	-
911401553447	RC160V LED37/965 W60L60 PSU CAU	3,850 lm	6500 K	128 lm/W	≥90	-
911401554147	RC160V LED35/930 W60L60 PSD CAU	3,610 lm	3000 K	120 lm/W	≥90	-
911401554247	RC160V LED37/940 W60L60 PSD CAU	3,850 lm	4000 K	128 lm/W	≥90	-
911401554347	RC160V LED37/965 W60L60 PSD CAU	3,850 lm	6500 K	128 lm/W	≥90	-
911401555047	RC160X LED35/930 W60L60 WIA CAU	3,610 lm	3000 K	120 lm/W	≥90	-
911401555147	RC160X LED37/940 W60L60 WIA CAU	3,850 lm	4000 K	128 lm/W	≥90	-
911401555247	RC160X LED37/965 W60L60 WIA CAU	3,850 lm	6500 K	128 lm/W	≥90	-
911401555647	RC160V LED35/930 W60L60 PSU 54 CAU	3,610 lm	3000 K	120 lm/W	≥90	-
911401555747	RC160V LED37/940 W60L60 PSU 54 CAU	3,850 lm	4000 K	128 lm/W	≥90	-
911401555847	RC160V LED37/965 W60L60 PSU 54 CAU	3,850 lm	6500 K	128 lm/W	≥90	-
911401557147	RC190V LED34/930 W60L60 PSD OC 54 CAU	3,520 lm	3000 K	117 lm/W	≥90	-
911401557247	RC190V LED34/935 W60L60 PSD OC 54 CAU	3,520 lm	3500 K	117 lm/W	≥90	-
911401557347	RC190V LED36/940 W60L60 PSD OC 54 CAU	3,750 lm	4000 K	125 lm/W	≥90	-
911401558047	RC160V LED37/8TW W60L60	3,970 lm	Tunable white 2700-5000 K	132 lm/W	≥80	-
911401558247	RC160V LED36/9TW W60L60	3,770 lm	Tunable white 2700-5000 K	125 lm/W	≥90	-

Order Code	Full Product Name	Luminous Flux	Correlated Color Temperature (Nom)	Luminous Efficacy (rated) (Nom)	Color rendering index (CRI)	Number of light sources
911401558447	RC160V LED36/9TW W60L60 54	3,770 lm	Tunable white 2700-5000 K	125 lm/W	≥90	-
911401558647	RC160V LED36/9TW W60L60 CAU	3,770 lm	Tunable white 2700-5000 K	125 lm/W	≥90	-
911401559047	RC160V LED37/830 W603L603 PSU UVG	3,810 lm	3000 K	126 lm/W	≥80	-
911401559147	RC160V LED39/840 W603L603 PSU UVG	4,050 lm	4000 K	135 lm/W	≥80	-
911401559247	RC160V LED39/865 W603L603 PSU UVG	4,050 lm	6500 K	135 lm/W	≥80	-
911401560247	RC160V LED37/830 W60L60 PSU OC CPC	3,810 lm	3000 K	126 lm/W	≥80	-
911401560347	RC160V LED39/840 W60L60 PSU OC CPC	4,050 lm	4000 K	135 lm/W	≥80	-
911401560447	RC160V LED39/865 W60L60 PSU OC CPC	4,050 lm	6500 K	135 lm/W	≥80	-
911401563047	RC190X LED36/940 W60L60 WIA OC CAU	3,750 lm	4000 K	125 lm/W	≥90	-
911401563347	SP160P LED37/940 W60L60 PSU	3,850 lm	4000 K	128 lm/W	≥90	-
911401563547	SP160P LED37/940 W60L60 PSU OC	3,850 lm	4000 K	128 lm/W	≥90	-
911401563747	SP160P LED37/940 W60L60 PSD	3,850 lm	4000 K	128 lm/W	≥90	-
911401563947	SP160P LED37/940 W60L60 PSD OC	3,850 lm	4000 K	128 lm/W	≥90	-
911401564147	SP160P LED37/940 W60L60 PSU CN	3,850 lm	4000 K	128 lm/W	≥90	-
911401564347	SP160P LED37/940 W60L60 PSU OC CN	3,850 lm	4000 K	128 lm/W	≥90	-
911401564547	SP160P LED37/940 W60L60 PSD CN	3,850 lm	4000 K	128 lm/W	≥90	-
911401564747	SP160P LED37/940 W60L60 PSD OC CN	3,850 lm	4000 K	128 lm/W	≥90	-
911401564947	RC160V LED39/840 W60L60 PSU CN	4,050 lm	4000 K	135 lm/W	≥80	-
911401565247	RC160V LED39/840 W60L60 PSU OC CN	4,050 lm	4000 K	135 lm/W	≥80	-
911401565447	RC160V LED60/840 W60L120 PSU OC CN	6,310 lm	4000 K	137 lm/W	≥80	-
911401565547	RC160V LED39/840 W60L60 PSU 54 CN	4,050 lm	4000 K	135 lm/W	≥80	-
911401566047	RC160V LED39/840 W60L60 PSD CN	4,050 lm	4000 K	135 lm/W	≥80	-
911401566347	RC160X LED39/840 W60L60 WIA CN	4,050 lm	4000 K	135 lm/W	≥80	-

Operating and Electrical

Order Code	Full Product Name	Input Voltage	Power Consumption
911401524932	RC160X LED39/840 W30L120 SIA	200 to 240 V	30 W
911401528432	RC160X LED37/830 W30L120 SIA CAU	200 to 240 V	30 W
911401528632	RC160X LED39/865 W30L120 SIA CAU	200 to 240 V	30 W
911401531647	RC160V LED37/830 W30L120 PSU	220 to 240 V	30 W
911401531747	RC160V LED39/840 W30L120 PSU	220 to 240 V	30 W
911401531847	RC160V LED39/865 W30L120 PSU	220 to 240 V	30 W
911401532547	RC160V LED37/830 W30L120 PSU OC	220 to 240 V	30 W
911401532647	RC160V LED39/840 W30L120 PSU OC	220 to 240 V	30 W
911401532747	RC160V LED39/865 W30L120 PSU OC	220 to 240 V	30 W
911401537047	RC160V LED37/830 W30L120 PSD	220 to 240 V	30 W
911401537147	RC160V LED39/840 W30L120 PSD	220 to 240 V	30 W
911401537247	RC160V LED39/865 W30L120 PSD	220 to 240 V	30 W
911401543432	RC160X LED35/930 W30L120 SIA CAU	200 to 240 V	30 W

Order Code	Full Product Name	Input Voltage	Power Consumption
911401543532	RC160X LED37/940 W30L120 SIA CAU	200 to 240 V	30 W
911401543632	RC160X LED37/965 W30L120 SIA CAU	200 to 240 V	30 W
911401550247	RC160V LED35/930 W30L120 PSU	220 to 240 V	30 W
911401550347	RC160V LED37/940 W30L120 PSU	220 to 240 V	30 W
911401550447	RC160V LED37/965 W30L120 PSU	220 to 240 V	30 W
911401552047	RC160V LED35/930 W30L120 PSD	220 to 240 V	30 W
911401552147	RC160V LED37/940 W30L120 PSD	220 to 240 V	30 W
911401552247	RC160V LED37/965 W30L120 PSD	220 to 240 V	30 W
911401552947	RC160X LED35/930 W30L120 WIA	220 to 240 V	30 W
911401553047	RC160X LED37/940 W30L120 WIA	220 to 240 V	30 W
911401553147	RC160X LED37/965 W30L120 WIA	220 to 240 V	30 W
911401554447	RC160V LED35/930 W30L120 PSD CAU	220 to 240 V	30 W
911401554547	RC160V LED37/940 W30L120 PSD CAU	220 to 240 V	30 W
911401554647	RC160V LED37/965 W30L120 PSD CAU	220 to 240 V	30 W
911401555347	RC160X LED35/930 W30L120 WIA CAU	220 to 240 V	30 W
911401555447	RC160X LED37/940 W30L120 WIA CAU	220 to 240 V	30 W
911401555547	RC160X LED37/965 W30L120 WIA CAU	220 to 240 V	30 W
911401555947	RC160V LED35/930 W30L120 PSU 54 CAU	220 to 240 V	30 W
911401556047	RC160V LED37/940 W30L120 PSU 54 CAU	220 to 240 V	30 W
911401556147	RC160V LED37/965 W30L120 PSU 54 CAU	220 to 240 V	30 W
911401557447	RC190V LED34/930 W30L120 PSD OC 54 CAU	220 to 240 V	30 W
911401557547	RC190V LED34/935 W30L120 PSD OC 54 CAU	220 to 240 V	30 W
911401557647	RC190V LED36/940 W30L120 PSD OC 54 CAU	220 to 240 V	30 W
911401558147	RC160V LED38/8TW W30L120	220 to 240 V	30 W
911401558347	RC160V LED37/9TW W30L120	220 to 240 V	30 W
911401558547	RC160V LED37/9TW W30L120 54	220 to 240 V	30 W
911401558747	RC160V LED37/9TW W30L120 CAU	220 to 240 V	30 W
911401563147	RC190X LED36/940 W30L120 WIA OC CAU	220 to 240 V	30 W
911401563447	SP160P LED37/940 W30L120 PSU	220 to 240 V	30 W
911401563647	SP160P LED37/940 W30L120 PSU OC	220 to 240 V	30 W
911401563847	SP160P LED37/940 W30L120 PSD	220 to 240 V	30 W
911401564047	SP160P LED37/940 W30L120 PSD OC	220 to 240 V	30 W
911401564247	SP160P LED37/940 W30L120 PSU CN	220 to 240 V	30 W
911401564447	SP160P LED37/940 W30L120 PSU OC CN	220 to 240 V	30 W
911401564647	SP160P LED37/940 W30L120 PSD CN	220 to 240 V	30 W
911401564847	SP160P LED37/940 W30L120 PSD OC CN	220 to 240 V	30 W
911401565047	RC160V LED39/840 W30L120 PSU CN	220 to 240 V	30 W
911401565347	RC160V LED39/840 W30L120 PSU OC CN	220 to 240 V	30 W
911401565647	RC160V LED39/840 W30L120 PSU 54 CN	220 to 240 V	30 W
911401566147	RC160V LED39/840 W30L120 PSD CN	220 to 240 V	30 W
911401566447	RC160X LED39/840 W30L120 WIA CN	220 to 240 V	30 W
911401528732	RC160X LED57/830 W60L120 SIA CAU	200 to 240 V	46 W

Order Code	Full Product Name	Input Voltage	Power Consumption
911401528932	RC160X LED60/865 W60L120 SIA CAU	200 to 240 V	46 W
911401531947	RC160V LED57/830 W60L120 PSU	220 to 240 V	46 W
911401532047	RC160V LED60/840 W60L120 PSU	220 to 240 V	46 W
911401532147	RC160V LED60/865 W60L120 PSU	220 to 240 V	46 W
911401532847	RC160V LED57/830 W60L120 PSU OC	220 to 240 V	46 W
911401532947	RC160V LED60/840 W60L120 PSU OC	220 to 240 V	46 W
911401533047	RC160V LED60/865 W60L120 PSU OC	220 to 240 V	46 W
911401537347	RC160V LED57/830 W60L120 PSD	220 to 240 V	46 W
911401537447	RC160V LED60/840 W60L120 PSD	220 to 240 V	46 W
911401537547	RC160V LED60/865 W60L120 PSD	220 to 240 V	46 W
911401543732	RC160X LED54/930 W60L120 SIA CAU	200 to 240 V	46 W
911401543832	RC160X LED58/940 W60L120 SIA CAU	200 to 240 V	46 W
911401543932	RC160X LED58/965 W60L120 SIA CAU	200 to 240 V	46 W
911401550547	RC160V LED54/930 W60L120 PSU	220 to 240 V	46 W
911401550647	RC160V LED58/940 W60L120 PSU	220 to 240 V	46 W
911401550747	RC160V LED58/965 W60L120 PSU	220 to 240 V	46 W
911401552347	RC160V LED54/930 W60L120 PSD	220 to 240 V	46 W
911401552447	RC160V LED58/940 W60L120 PSD	220 to 240 V	46 W
911401552547	RC160V LED58/965 W60L120 PSD	220 to 240 V	46 W
911401554747	RC160V LED54/930 W60L120 PSD CAU	220 to 240 V	46 W
911401554847	RC160V LED58/940 W60L120 PSD CAU	220 to 240 V	46 W
911401554947	RC160V LED58/965 W60L120 PSD CAU	220 to 240 V	46 W
911401556247	RC160V LED54/930 W60L120 PSU 54 CAU	220 to 240 V	46 W
911401556347	RC160V LED58/940 W60L120 PSU 54 CAU	220 to 240 V	46 W
911401556447	RC160V LED58/965 W60L120 PSU 54 CAU	220 to 240 V	46 W
911401556547	RC160X LED48/930 W60L120 WIA	220 to 240 V	40 W
911401556647	RC160X LED51/940 W60L120 WIA	220 to 240 V	40 W
911401556747	RC160X LED51/965 W60L120 WIA	220 to 240 V	40 W
911401556847	RC160X LED48/930 W60L120 WIA CAU	220 to 240 V	40 W
911401556947	RC160X LED51/940 W60L120 WIA CAU	220 to 240 V	40 W
911401557047	RC160X LED51/965 W60L120 WIA CAU	220 to 240 V	40 W
911401557847	RC190V LED37/935 W60L120 PSD OC 54 CAU	220 to 240 V	30 W
911401557947	RC190V LED40/940 W60L120 PSD OC 54 CAU	220 to 240 V	30 W
911401563247	RC190X LED40/940 W60L120 WIA OC CAU	220 to 240 V	30 W
911401565147	RC160V LED60/840 W60L120 PSU CN	220 to 240 V	46 W
911401565747	RC160V LED60/840 W60L120 PSU 54 CN	220 to 240 V	46 W
911401566247	RC160V LED60/840 W60L120 PSD CN	220 to 240 V	46 W
911401509832	RC160V LED37/830 W60L60 PSU	200 to 240 V	30 W
911401528132	RC160X LED37/830 W60L60 SIA CAU	200 to 240 V	30 W
911401528332	RC160X LED39/865 W60L60 SIA CAU	200 to 240 V	30 W
911401531347	RC160V LED37/830 W60L60 PSU	220 to 240 V	30 W
911401531447	RC160V LED39/840 W60L60 PSU	220 to 240 V	30 W

Order Code	Full Product Name	Input Voltage	Power Consumption
911401531547	RC160V LED39/865 W60L60 PSU	220 to 240 V	30 W
911401532247	RC160V LED37/830 W60L60 PSU OC	220 to 240 V	30 W
911401532347	RC160V LED39/840 W60L60 PSU OC	220 to 240 V	30 W
911401532447	RC160V LED39/865 W60L60 PSU OC	220 to 240 V	30 W
911401533147	RC160V LED27/830 W60L60 PSU 16	220 to 240 V	22.6 W
911401533247	RC160V LED29/840 W60L60 PSU 16	220 to 240 V	22.6 W
911401533347	RC160V LED29/865 W60L60 PSU 16	220 to 240 V	22.6 W
911401534047	RC160V LED37/830 W60L60 PSU 54	220 to 240 V	30 W
911401534147	RC160V LED39/840 W60L60 PSU 54	220 to 240 V	30 W
911401534247	RC160V LED39/865 W60L60 PSU 54	220 to 240 V	30 W
911401534947	RC160V LED37/830 W60L60 PSU OC 54	220 to 240 V	30 W
911401535047	RC160V LED39/840 W60L60 PSU OC 54	220 to 240 V	30 W
911401535147	RC160V LED39/865 W60L60 PSU OC 54	220 to 240 V	30 W
911401535847	RC160V LED27/830 W60L60 PSU 16 54	220 to 240 V	22.6 W
911401535947	RC160V LED29/840 W60L60 PSU 16 54	220 to 240 V	22.6 W
911401536047	RC160V LED29/865 W60L60 PSU 16 54	220 to 240 V	22.6 W
911401536747	RC160V LED37/830 W60L60 PSD	220 to 240 V	30 W
911401536847	RC160V LED39/840 W60L60 PSD	220 to 240 V	30 W
911401536947	RC160V LED39/865 W60L60 PSD	220 to 240 V	30 W
911401537647	RC160V LED37/830 W60L60 PSD OC	220 to 240 V	30 W
911401537747	RC160V LED39/840 W60L60 PSD OC	220 to 240 V	30 W
911401537847	RC160V LED39/865 W60L60 PSD OC	220 to 240 V	30 W
911401538547	RC160V LED27/830 W60L60 PSD 16	220 to 240 V	22.6 W
911401538647	RC160V LED29/840 W60L60 PSD 16	220 to 240 V	22.6 W
911401538747	RC160V LED29/865 W60L60 PSD 16	220 to 240 V	22.6 W
911401539447	RC160X LED37/830 W60L60 WIA	220 to 240 V	30 W
911401539547	RC160X LED39/840 W60L60 WIA	220 to 240 V	30 W
911401539647	RC160X LED39/865 W60L60 WIA	220 to 240 V	30 W
911401540047	RC160X LED37/830 W60L60 WIA OC	220 to 240 V	30 W
911401540147	RC160X LED39/840 W60L60 WIA OC	220 to 240 V	30 W
911401540247	RC160X LED39/865 W60L60 WIA OC	220 to 240 V	30 W
911401540647	RC160V LED37/830 W60L60 PSU CAU	220 to 240 V	30 W
911401540747	RC160V LED39/840 W60L60 PSU CAU	220 to 240 V	30 W
911401540847	RC160V LED39/865 W60L60 PSU CAU	220 to 240 V	30 W
911401541547	RC160V LED37/830 W60L60 PSD CAU	220 to 240 V	30 W
911401541647	RC160V LED39/840 W60L60 PSD CAU	220 to 240 V	30 W
911401541747	RC160V LED39/865 W60L60 PSD CAU	220 to 240 V	30 W
911401542447	RC160X LED37/830 W60L60 WIA CAU	220 to 240 V	30 W
911401542547	RC160X LED39/840 W60L60 WIA CAU	220 to 240 V	30 W
911401542647	RC160X LED39/865 W60L60 WIA CAU	220 to 240 V	30 W
911401543047	RC160V LED37/830 W60L60 PSU OC CAU	220 to 240 V	30 W
911401543132	RC160X LED35/930 W60L60 SIA CAU	200 to 240 V	30 W

Order Code	Full Product Name	Input Voltage	Power Consumption
911401543147	RC160V LED39/840 W60L60 PSU OC CAU	220 to 240 V	30 W
911401543232	RC160X LED37/940 W60L60 SIA CAU	200 to 240 V	30 W
911401543247	RC160V LED39/865 W60L60 PSU OC CAU	220 to 240 V	30 W
911401543332	RC160X LED37/965 W60L60 SIA CAU	200 to 240 V	30 W
911401543947	RC160V LED37/830 W60L60 PSD OC CAU	220 to 240 V	30 W
911401544047	RC160V LED39/840 W60L60 PSD OC CAU	220 to 240 V	30 W
911401544147	RC160V LED39/865 W60L60 PSD OC CAU	220 to 240 V	30 W
911401544847	RC160X LED37/830 W60L60 WIA OC CAU	220 to 240 V	30 W
911401544947	RC160X LED39/840 W60L60 WIA OC CAU	220 to 240 V	30 W
911401545047	RC160X LED39/865 W60L60 WIA OC CAU	220 to 240 V	30 W
911401545147	RC160V LED27/830 W60L60 PSU 16 CAU	220 to 240 V	22.6 W
911401545247	RC160V LED29/840 W60L60 PSU 16 CAU	220 to 240 V	22.6 W
911401545347	RC160V LED29/865 W60L60 PSU 16 CAU	220 to 240 V	22.6 W
911401546047	RC160V LED27/830 W60L60 PSD 16 CAU	220 to 240 V	22.6 W
911401546147	RC160V LED29/840 W60L60 PSD 16 CAU	220 to 240 V	22.6 W
911401546247	RC160V LED29/865 W60L60 PSD 16 CAU	220 to 240 V	22.6 W
911401546947	RC160X LED27/830 W60L60 WIA 16 CAU	220 to 240 V	22.6 W
911401547047	RC160X LED29/840 W60L60 WIA 16 CAU	220 to 240 V	22.6 W
911401547147	RC160X LED29/865 W60L60 WIA 16 CAU	220 to 240 V	22.6 W
911401548147	RC160V LED37/830 W60L60 PSU OC 54 CAU	220 to 240 V	30 W
911401548247	RC160V LED39/840 W60L60 PSU OC 54 CAU	220 to 240 V	30 W
911401548347	RC160V LED39/865 W60L60 PSU OC 54 CAU	220 to 240 V	30 W
911401549047	RC160V LED27/830 W60L60 PSU 16 54 CAU	220 to 240 V	22.6 W
911401549147	RC160V LED29/840 W60L60 PSU 16 54 CAU	220 to 240 V	22.6 W
911401549247	RC160V LED29/865 W60L60 PSU 16 54 CAU	220 to 240 V	22.6 W
911401549947	RC160V LED35/930 W60L60 PSU	220 to 240 V	30 W
911401550047	RC160V LED37/940 W60L60 PSU	220 to 240 V	30 W
911401550147	RC160V LED37/965 W60L60 PSU	220 to 240 V	30 W
911401550847	RC160V LED35/930 W60L60 PSU 54	220 to 240 V	30 W
911401550947	RC160V LED37/940 W60L60 PSU 54	220 to 240 V	30 W
911401551047	RC160V LED37/965 W60L60 PSU 54	220 to 240 V	30 W
911401551747	RC160V LED35/930 W60L60 PSD	220 to 240 V	30 W
911401551847	RC160V LED37/940 W60L60 PSD	220 to 240 V	30 W
911401551947	RC160V LED37/965 W60L60 PSD	220 to 240 V	30 W
911401552647	RC160X LED35/930 W60L60 WIA	220 to 240 V	30 W
911401552747	RC160X LED37/940 W60L60 WIA	220 to 240 V	30 W
911401552847	RC160X LED37/965 W60L60 WIA	220 to 240 V	30 W
911401553247	RC160V LED35/930 W60L60 PSU CAU	220 to 240 V	30 W
911401553347	RC160V LED37/940 W60L60 PSU CAU	220 to 240 V	30 W
911401553447	RC160V LED37/965 W60L60 PSU CAU	220 to 240 V	30 W
911401554147	RC160V LED35/930 W60L60 PSD CAU	220 to 240 V	30 W
911401554247	RC160V LED37/940 W60L60 PSD CAU	220 to 240 V	30 W

Order Code	Full Product Name	Input Voltage	Power Consumption
911401554347	RC160V LED37/965 W60L60 PSD CAU	220 to 240 V	30 W
911401555047	RC160X LED35/930 W60L60 WIA CAU	220 to 240 V	30 W
911401555147	RC160X LED37/940 W60L60 WIA CAU	220 to 240 V	30 W
911401555247	RC160X LED37/965 W60L60 WIA CAU	220 to 240 V	30 W
911401555647	RC160V LED35/930 W60L60 PSU 54 CAU	220 to 240 V	30 W
911401555747	RC160V LED37/940 W60L60 PSU 54 CAU	220 to 240 V	30 W
911401555847	RC160V LED37/965 W60L60 PSU 54 CAU	220 to 240 V	30 W
911401557147	RC190V LED34/930 W60L60 PSD OC 54 CAU	220 to 240 V	30 W
911401557247	RC190V LED34/935 W60L60 PSD OC 54 CAU	220 to 240 V	30 W
911401557347	RC190V LED36/940 W60L60 PSD OC 54 CAU	220 to 240 V	30 W
911401558047	RC160V LED37/8TW W60L60	220 to 240 V	30 W
911401558247	RC160V LED36/9TW W60L60	220 to 240 V	30 W
911401558447	RC160V LED36/9TW W60L60 54	220 to 240 V	30 W
911401558647	RC160V LED36/9TW W60L60 CAU	220 to 240 V	30 W
911401559047	RC160V LED37/830 W603L603 PSU UVG	220 to 240 V	30 W
911401559147	RC160V LED39/840 W603L603 PSU UVG	220 to 240 V	30 W
911401559247	RC160V LED39/865 W603L603 PSU UVG	220 to 240 V	30 W
911401560247	RC160V LED37/830 W60L60 PSU OC CPC	220 to 240 V	30 W
911401560347	RC160V LED39/840 W60L60 PSU OC CPC	220 to 240 V	30 W
911401560447	RC160V LED39/865 W60L60 PSU OC CPC	220 to 240 V	30 W
911401563047	RC190X LED36/940 W60L60 WIA OC CAU	220 to 240 V	30 W
911401563347	SP160P LED37/940 W60L60 PSU	220 to 240 V	30 W
911401563547	SP160P LED37/940 W60L60 PSU OC	220 to 240 V	30 W
911401563747	SP160P LED37/940 W60L60 PSD	220 to 240 V	30 W
911401563947	SP160P LED37/940 W60L60 PSD OC	220 to 240 V	30 W
911401564147	SP160P LED37/940 W60L60 PSU CN	220 to 240 V	30 W
911401564347	SP160P LED37/940 W60L60 PSU OC CN	220 to 240 V	30 W
911401564547	SP160P LED37/940 W60L60 PSD CN	220 to 240 V	30 W
911401564747	SP160P LED37/940 W60L60 PSD OC CN	220 to 240 V	30 W
911401564947	RC160V LED39/840 W60L60 PSU CN	220 to 240 V	30 W
911401565247	RC160V LED39/840 W60L60 PSU OC CN	220 to 240 V	30 W
911401565447	RC160V LED60/840 W60L120 PSU OC CN	220 to 240 V	46 W
911401565547	RC160V LED39/840 W60L60 PSU 54 CN	220 to 240 V	30 W
911401566047	RC160V LED39/840 W60L60 PSD CN	220 to 240 V	30 W
911401566347	RC160X LED39/840 W60L60 WIA CN	220 to 240 V	30 W

Controls and Dimming

Order Code	Full Product Name	Dimmable
911401524932	RC160X LED39/840 W30L120 SIA	Auto-Dim
911401528432	RC160X LED37/830 W30L120 SIA CAU	Auto-Dim
911401528632	RC160X LED39/865 W30L120 SIA CAU	Auto-Dim

Order Code	Full Product Name	Dimmable
911401531647	RC160V LED37/830 W30L120 PSU	Fixed
911401531747	RC160V LED39/840 W30L120 PSU	Fixed
911401531847	RC160V LED39/865 W30L120 PSU	Fixed
911401532547	RC160V LED37/830 W30L120 PSU OC	Fixed
911401532647	RC160V LED39/840 W30L120 PSU OC	Fixed
911401532747	RC160V LED39/865 W30L120 PSU OC	Fixed
911401537047	RC160V LED37/830 W30L120 PSD	DALI
911401537147	RC160V LED39/840 W30L120 PSD	DALI
911401537247	RC160V LED39/865 W30L120 PSD	DALI
911401543432	RC160X LED35/930 W30L120 SIA CAU	Auto-Dim
911401543532	RC160X LED37/940 W30L120 SIA CAU	Auto-Dim
911401543632	RC160X LED37/965 W30L120 SIA CAU	Auto-Dim
911401550247	RC160V LED35/930 W30L120 PSU	Fixed
911401550347	RC160V LED37/940 W30L120 PSU	Fixed
911401550447	RC160V LED37/965 W30L120 PSU	Fixed
911401552047	RC160V LED35/930 W30L120 PSD	DALI
911401552147	RC160V LED37/940 W30L120 PSD	DALI
911401552247	RC160V LED37/965 W30L120 PSD	DALI
911401552947	RC160X LED35/930 W30L120 WIA	Fixed
911401553047	RC160X LED37/940 W30L120 WIA	Fixed
911401553147	RC160X LED37/965 W30L120 WIA	Fixed
911401554447	RC160V LED35/930 W30L120 PSD CAU	DALI
911401554547	RC160V LED37/940 W30L120 PSD CAU	DALI
911401554647	RC160V LED37/965 W30L120 PSD CAU	DALI
911401555347	RC160X LED35/930 W30L120 WIA CAU	Fixed
911401555447	RC160X LED37/940 W30L120 WIA CAU	Fixed
911401555547	RC160X LED37/965 W30L120 WIA CAU	Fixed
911401555947	RC160V LED35/930 W30L120 PSU 54 CAU	Fixed
911401556047	RC160V LED37/940 W30L120 PSU 54 CAU	Fixed
911401556147	RC160V LED37/965 W30L120 PSU 54 CAU	Fixed
911401557447	RC190V LED34/930 W30L120 PSD OC 54 CAU	DALI
911401557547	RC190V LED34/935 W30L120 PSD OC 54 CAU	DALI
911401557647	RC190V LED36/940 W30L120 PSD OC 54 CAU	DALI
911401558147	RC160V LED38/8TW W30L120	DALI
911401558347	RC160V LED37/9TW W30L120	DALI
911401558547	RC160V LED37/9TW W30L120 54	DALI
911401558747	RC160V LED37/9TW W30L120 CAU	DALI
911401563147	RC190X LED36/940 W30L120 WIA OC CAU	Fixed
911401563447	SP160P LED37/940 W30L120 PSU	Fixed
911401563647	SP160P LED37/940 W30L120 PSU OC	Fixed
911401563847	SP160P LED37/940 W30L120 PSD	DALI
911401564047	SP160P LED37/940 W30L120 PSD OC	DALI

Order Code	Full Product Name	Dimmable
911401564247	SP160P LED37/940 W30L120 PSU CN	Fixed
911401564447	SP160P LED37/940 W30L120 PSU OC CN	Fixed
911401564647	SP160P LED37/940 W30L120 PSD CN	DALI
911401564847	SP160P LED37/940 W30L120 PSD OC CN	DALI
911401565047	RC160V LED39/840 W30L120 PSU CN	Fixed
911401565347	RC160V LED39/840 W30L120 PSU OC CN	Fixed
911401565647	RC160V LED39/840 W30L120 PSU 54 CN	Fixed
911401566147	RC160V LED39/840 W30L120 PSD CN	DALI
911401566447	RC160X LED39/840 W30L120 WIA CN	Fixed
911401528732	RC160X LED57/830 W60L120 SIA CAU	Auto-Dim
911401528932	RC160X LED60/865 W60L120 SIA CAU	Auto-Dim
911401531947	RC160V LED57/830 W60L120 PSU	Fixed
911401532047	RC160V LED60/840 W60L120 PSU	Fixed
911401532147	RC160V LED60/865 W60L120 PSU	Fixed
911401532847	RC160V LED57/830 W60L120 PSU OC	Fixed
911401532947	RC160V LED60/840 W60L120 PSU OC	Fixed
911401533047	RC160V LED60/865 W60L120 PSU OC	Fixed
911401537347	RC160V LED57/830 W60L120 PSD	DALI
911401537447	RC160V LED60/840 W60L120 PSD	DALI
911401537547	RC160V LED60/865 W60L120 PSD	DALI
911401543732	RC160X LED54/930 W60L120 SIA CAU	Auto-Dim
911401543832	RC160X LED58/940 W60L120 SIA CAU	Auto-Dim
911401543932	RC160X LED58/965 W60L120 SIA CAU	Auto-Dim
911401550547	RC160V LED54/930 W60L120 PSU	Fixed
911401550647	RC160V LED58/940 W60L120 PSU	Fixed
911401550747	RC160V LED58/965 W60L120 PSU	Fixed
911401552347	RC160V LED54/930 W60L120 PSD	DALI
911401552447	RC160V LED58/940 W60L120 PSD	DALI
911401552547	RC160V LED58/965 W60L120 PSD	DALI
911401554747	RC160V LED54/930 W60L120 PSD CAU	DALI
911401554847	RC160V LED58/940 W60L120 PSD CAU	DALI
911401554947	RC160V LED58/965 W60L120 PSD CAU	DALI
911401556247	RC160V LED54/930 W60L120 PSU 54 CAU	Fixed
911401556347	RC160V LED58/940 W60L120 PSU 54 CAU	Fixed
911401556447	RC160V LED58/965 W60L120 PSU 54 CAU	Fixed
911401556547	RC160X LED48/930 W60L120 WIA	Fixed
911401556647	RC160X LED51/940 W60L120 WIA	Fixed
911401556747	RC160X LED51/965 W60L120 WIA	Fixed
911401556847	RC160X LED48/930 W60L120 WIA CAU	Fixed
911401556947	RC160X LED51/940 W60L120 WIA CAU	Fixed
911401557047	RC160X LED51/965 W60L120 WIA CAU	Fixed
911401557847	RC190V LED37/935 W60L120 PSD OC 54 CAU	DALI

Order Code	Full Product Name	Dimmable
911401557947	RC190V LED40/940 W60L120 PSD OC 54 CAU	DALI
911401563247	RC190X LED40/940 W60L120 WIA OC CAU	Fixed
911401565147	RC160V LED60/840 W60L120 PSU CN	Fixed
911401565747	RC160V LED60/840 W60L120 PSU 54 CN	Fixed
911401566247	RC160V LED60/840 W60L120 PSD CN	DALI
911401509832	RC160V LED37/830 W60L60 PSU	Fixed
911401528132	RC160X LED37/830 W60L60 SIA CAU	Auto-Dim
911401528332	RC160X LED39/865 W60L60 SIA CAU	Auto-Dim
911401531347	RC160V LED37/830 W60L60 PSU	Fixed
911401531447	RC160V LED39/840 W60L60 PSU	Fixed
911401531547	RC160V LED39/865 W60L60 PSU	Fixed
911401532247	RC160V LED37/830 W60L60 PSU OC	Fixed
911401532347	RC160V LED39/840 W60L60 PSU OC	Fixed
911401532447	RC160V LED39/865 W60L60 PSU OC	Fixed
911401533147	RC160V LED27/830 W60L60 PSU 16	Fixed
911401533247	RC160V LED29/840 W60L60 PSU 16	Fixed
911401533347	RC160V LED29/865 W60L60 PSU 16	Fixed
911401534047	RC160V LED37/830 W60L60 PSU 54	Fixed
911401534147	RC160V LED39/840 W60L60 PSU 54	Fixed
911401534247	RC160V LED39/865 W60L60 PSU 54	Fixed
911401534947	RC160V LED37/830 W60L60 PSU OC 54	Fixed
911401535047	RC160V LED39/840 W60L60 PSU OC 54	Fixed
911401535147	RC160V LED39/865 W60L60 PSU OC 54	Fixed
911401535847	RC160V LED27/830 W60L60 PSU 16 54	Fixed
911401535947	RC160V LED29/840 W60L60 PSU 16 54	Fixed
911401536047	RC160V LED29/865 W60L60 PSU 16 54	Fixed
911401536747	RC160V LED37/830 W60L60 PSD	DALI
911401536847	RC160V LED39/840 W60L60 PSD	DALI
911401536947	RC160V LED39/865 W60L60 PSD	DALI
911401537647	RC160V LED37/830 W60L60 PSD OC	DALI
911401537747	RC160V LED39/840 W60L60 PSD OC	DALI
911401537847	RC160V LED39/865 W60L60 PSD OC	DALI
911401538547	RC160V LED27/830 W60L60 PSD 16	DALI
911401538647	RC160V LED29/840 W60L60 PSD 16	DALI
911401538747	RC160V LED29/865 W60L60 PSD 16	DALI
911401539447	RC160X LED37/830 W60L60 WIA	Fixed
911401539547	RC160X LED39/840 W60L60 WIA	Fixed
911401539647	RC160X LED39/865 W60L60 WIA	Fixed
911401540047	RC160X LED37/830 W60L60 WIA OC	Fixed
911401540147	RC160X LED39/840 W60L60 WIA OC	Fixed
911401540247	RC160X LED39/865 W60L60 WIA OC	Fixed
911401540647	RC160V LED37/830 W60L60 PSU CAU	Fixed

Order Code	Full Product Name	Dimmable
911401540747	RC160V LED39/840 W60L60 PSU CAU	Fixed
911401540847	RC160V LED39/865 W60L60 PSU CAU	Fixed
911401541547	RC160V LED37/830 W60L60 PSD CAU	DALI
911401541647	RC160V LED39/840 W60L60 PSD CAU	DALI
911401541747	RC160V LED39/865 W60L60 PSD CAU	DALI
911401542447	RC160X LED37/830 W60L60 WIA CAU	Fixed
911401542547	RC160X LED39/840 W60L60 WIA CAU	Fixed
911401542647	RC160X LED39/865 W60L60 WIA CAU	Fixed
911401543047	RC160V LED37/830 W60L60 PSU OC CAU	Fixed
911401543132	RC160X LED35/930 W60L60 SIA CAU	Auto-Dim
911401543147	RC160V LED39/840 W60L60 PSU OC CAU	Fixed
911401543232	RC160X LED37/940 W60L60 SIA CAU	Auto-Dim
911401543247	RC160V LED39/865 W60L60 PSU OC CAU	Fixed
911401543332	RC160X LED37/965 W60L60 SIA CAU	Auto-Dim
911401543947	RC160V LED37/830 W60L60 PSD OC CAU	DALI
911401544047	RC160V LED39/840 W60L60 PSD OC CAU	DALI
911401544147	RC160V LED39/865 W60L60 PSD OC CAU	DALI
911401544847	RC160X LED37/830 W60L60 WIA OC CAU	Fixed
911401544947	RC160X LED39/840 W60L60 WIA OC CAU	Fixed
911401545047	RC160X LED39/865 W60L60 WIA OC CAU	Fixed
911401545147	RC160V LED27/830 W60L60 PSU 16 CAU	Fixed
911401545247	RC160V LED29/840 W60L60 PSU 16 CAU	Fixed
911401545347	RC160V LED29/865 W60L60 PSU 16 CAU	Fixed
911401546047	RC160V LED27/830 W60L60 PSD 16 CAU	DALI
911401546147	RC160V LED29/840 W60L60 PSD 16 CAU	DALI
911401546247	RC160V LED29/865 W60L60 PSD 16 CAU	DALI
911401546947	RC160X LED27/830 W60L60 WIA 16 CAU	Fixed
911401547047	RC160X LED29/840 W60L60 WIA 16 CAU	Fixed
911401547147	RC160X LED29/865 W60L60 WIA 16 CAU	Fixed
911401548147	RC160V LED37/830 W60L60 PSU OC 54 CAU	Fixed
911401548247	RC160V LED39/840 W60L60 PSU OC 54 CAU	Fixed
911401548347	RC160V LED39/865 W60L60 PSU OC 54 CAU	Fixed
911401549047	RC160V LED27/830 W60L60 PSU 16 54 CAU	Fixed
911401549147	RC160V LED29/840 W60L60 PSU 16 54 CAU	Fixed
911401549247	RC160V LED29/865 W60L60 PSU 16 54 CAU	Fixed
911401549947	RC160V LED35/930 W60L60 PSU	Fixed
911401550047	RC160V LED37/940 W60L60 PSU	Fixed
911401550147	RC160V LED37/965 W60L60 PSU	Fixed
911401550847	RC160V LED35/930 W60L60 PSU 54	Fixed
911401550947	RC160V LED37/940 W60L60 PSU 54	Fixed
911401551047	RC160V LED37/965 W60L60 PSU 54	Fixed
911401551747	RC160V LED35/930 W60L60 PSD	DALI

Order Code	Full Product Name	Dimmable
911401551847	RC160V LED37/940 W60L60 PSD	DALI
911401551947	RC160V LED37/965 W60L60 PSD	DALI
911401552647	RC160X LED35/930 W60L60 WIA	Fixed
911401552747	RC160X LED37/940 W60L60 WIA	Fixed
911401552847	RC160X LED37/965 W60L60 WIA	Fixed
911401553247	RC160V LED35/930 W60L60 PSU CAU	Fixed
911401553347	RC160V LED37/940 W60L60 PSU CAU	Fixed
911401553447	RC160V LED37/965 W60L60 PSU CAU	Fixed
911401554147	RC160V LED35/930 W60L60 PSD CAU	DALI
911401554247	RC160V LED37/940 W60L60 PSD CAU	DALI
911401554347	RC160V LED37/965 W60L60 PSD CAU	DALI
911401555047	RC160X LED35/930 W60L60 WIA CAU	Fixed
911401555147	RC160X LED37/940 W60L60 WIA CAU	Fixed
911401555247	RC160X LED37/965 W60L60 WIA CAU	Fixed
911401555647	RC160V LED35/930 W60L60 PSU 54 CAU	Fixed
911401555747	RC160V LED37/940 W60L60 PSU 54 CAU	Fixed
911401555847	RC160V LED37/965 W60L60 PSU 54 CAU	Fixed
911401557147	RC190V LED34/930 W60L60 PSD OC 54 CAU	DALI
911401557247	RC190V LED34/935 W60L60 PSD OC 54 CAU	DALI
911401557347	RC190V LED36/940 W60L60 PSD OC 54 CAU	DALI
911401558047	RC160V LED37/8TW W60L60	DALI
911401558247	RC160V LED36/9TW W60L60	DALI
911401558447	RC160V LED36/9TW W60L60 54	DALI
911401558647	RC160V LED36/9TW W60L60 CAU	DALI
911401559047	RC160V LED37/830 W603L603 PSU UVG	Fixed
911401559147	RC160V LED39/840 W603L603 PSU UVG	Fixed
911401559247	RC160V LED39/865 W603L603 PSU UVG	Fixed
911401560247	RC160V LED37/830 W60L60 PSU OC CPC	Fixed
911401560347	RC160V LED39/840 W60L60 PSU OC CPC	Fixed
911401560447	RC160V LED39/865 W60L60 PSU OC CPC	Fixed
911401563047	RC190X LED36/940 W60L60 WIA OC CAU	Fixed
911401563347	SP160P LED37/940 W60L60 PSU	Fixed
911401563547	SP160P LED37/940 W60L60 PSU OC	Fixed
911401563747	SP160P LED37/940 W60L60 PSD	DALI
911401563947	SP160P LED37/940 W60L60 PSD OC	DALI
911401564147	SP160P LED37/940 W60L60 PSU CN	Fixed
911401564347	SP160P LED37/940 W60L60 PSU OC CN	Fixed
911401564547	SP160P LED37/940 W60L60 PSD CN	DALI
911401564747	SP160P LED37/940 W60L60 PSD OC CN	DALI
911401564947	RC160V LED39/840 W60L60 PSU CN	Fixed
911401565247	RC160V LED39/840 W60L60 PSU OC CN	Fixed
911401565447	RC160V LED60/840 W60L120 PSU OC CN	Fixed

Order Code	Full Product Name	Dimmable
911401565547	RC160V LED39/840 W60L60 PSU 54 CN	Fixed
911401566047	RC160V LED39/840 W60L60 PSD CN	DALI
911401566347	RC160X LED39/840 W60L60 WIA CN	Fixed

Mechanical and Housing

Order Code	Full Product Name	Ingress protection code	Mech. impact protection code
911401524932	RC160X LED39/840 W30L120 SIA	IP20	IK03
911401528432	RC160X LED37/830 W30L120 SIA CAU	IP20	IK03
911401528632	RC160X LED39/865 W30L120 SIA CAU	IP20	IK03
911401531647	RC160V LED37/830 W30L120 PSU	IP54/20	IK02
911401531747	RC160V LED39/840 W30L120 PSU	IP54/20	IK02
911401531847	RC160V LED39/865 W30L120 PSU	IP54/20	IK02
911401532547	RC160V LED37/830 W30L120 PSU OC	IP54/20	IK02
911401532647	RC160V LED39/840 W30L120 PSU OC	IP54/20	IK02
911401532747	RC160V LED39/865 W30L120 PSU OC	IP54/20	IK02
911401537047	RC160V LED37/830 W30L120 PSD	IP54/20	IK02
911401537147	RC160V LED39/840 W30L120 PSD	IP54/20	IK02
911401537247	RC160V LED39/865 W30L120 PSD	IP54/20	IK02
911401543432	RC160X LED35/930 W30L120 SIA CAU	IP20	IK03
911401543532	RC160X LED37/940 W30L120 SIA CAU	IP20	IK03
911401543632	RC160X LED37/965 W30L120 SIA CAU	IP20	IK03
911401550247	RC160V LED35/930 W30L120 PSU	IP54/20	IK02
911401550347	RC160V LED37/940 W30L120 PSU	IP54/20	IK02
911401550447	RC160V LED37/965 W30L120 PSU	IP54/20	IK02
911401552047	RC160V LED35/930 W30L120 PSD	IP54/20	IK02
911401552147	RC160V LED37/940 W30L120 PSD	IP54/20	IK02
911401552247	RC160V LED37/965 W30L120 PSD	IP54/20	IK02
911401552947	RC160X LED35/930 W30L120 WIA	IP54/20	IK02
911401553047	RC160X LED37/940 W30L120 WIA	IP54/20	IK02
911401553147	RC160X LED37/965 W30L120 WIA	IP54/20	IK02
911401554447	RC160V LED35/930 W30L120 PSD CAU	IP54/20	IK02
911401554547	RC160V LED37/940 W30L120 PSD CAU	IP54/20	IK02
911401554647	RC160V LED37/965 W30L120 PSD CAU	IP54/20	IK02
911401555347	RC160X LED35/930 W30L120 WIA CAU	IP54/20	IK02
911401555447	RC160X LED37/940 W30L120 WIA CAU	IP54/20	IK02
911401555547	RC160X LED37/965 W30L120 WIA CAU	IP54/20	IK02
911401555947	RC160V LED35/930 W30L120 PSU 54 CAU	IP54/20	IK02
911401556047	RC160V LED37/940 W30L120 PSU 54 CAU	IP54/20	IK02
911401556147	RC160V LED37/965 W30L120 PSU 54 CAU	IP54/20	IK02
911401557447	RC190V LED34/930 W30L120 PSD OC 54 CAU	IP54/20	IK02
911401557547	RC190V LED34/935 W30L120 PSD OC 54 CAU	IP54/20	IK02

Order Code	Full Product Name	Ingress protection code	Mech. impact protection code
911401557647	RC190V LED36/940 W30L120 PSD OC 54 CAU	IP54/20	IK02
911401558147	RC160V LED38/8TW W30L120	IP54/20	IK02
911401558347	RC160V LED37/9TW W30L120	IP54/20	IK02
911401558547	RC160V LED37/9TW W30L120 54	IP54/20	IK02
911401558747	RC160V LED37/9TW W30L120 CAU	IP54/20	IK02
911401563147	RC190X LED36/940 W30L120 WIA OC CAU	IP54/20	IK02
911401563447	SP160P LED37/940 W30L120 PSU	IP54/20	IK02
911401563647	SP160P LED37/940 W30L120 PSU OC	IP54/20	IK02
911401563847	SP160P LED37/940 W30L120 PSD	IP54/20	IK02
911401564047	SP160P LED37/940 W30L120 PSD OC	IP54/20	IK02
911401564247	SP160P LED37/940 W30L120 PSU CN	IP54/20	IK02
911401564447	SP160P LED37/940 W30L120 PSU OC CN	IP54/20	IK02
911401564647	SP160P LED37/940 W30L120 PSD CN	IP54/20	IK02
911401564847	SP160P LED37/940 W30L120 PSD OC CN	IP54/20	IK02
911401565047	RC160V LED39/840 W30L120 PSU CN	IP54/20	IK02
911401565347	RC160V LED39/840 W30L120 PSU OC CN	IP54/20	IK02
911401565647	RC160V LED39/840 W30L120 PSU 54 CN	IP54/20	IK02
911401566147	RC160V LED39/840 W30L120 PSD CN	IP54/20	IK02
911401566447	RC160X LED39/840 W30L120 WIA CN	IP54/20	IK02
911401528732	RC160X LED57/830 W60L120 SIA CAU	IP20	IK03
911401528932	RC160X LED60/865 W60L120 SIA CAU	IP20	IK03
911401531947	RC160V LED57/830 W60L120 PSU	IP54/20	IK02
911401532047	RC160V LED60/840 W60L120 PSU	IP54/20	IK02
911401532147	RC160V LED60/865 W60L120 PSU	IP54/20	IK02
911401532847	RC160V LED57/830 W60L120 PSU OC	IP54/20	IK02
911401532947	RC160V LED60/840 W60L120 PSU OC	IP54/20	IK02
911401533047	RC160V LED60/865 W60L120 PSU OC	IP54/20	IK02
911401537347	RC160V LED57/830 W60L120 PSD	IP54/20	IK02
911401537447	RC160V LED60/840 W60L120 PSD	IP54/20	IK02
911401537547	RC160V LED60/865 W60L120 PSD	IP54/20	IK02
911401543732	RC160X LED54/930 W60L120 SIA CAU	IP20	IK03
911401543832	RC160X LED58/940 W60L120 SIA CAU	IP20	IK03
911401543932	RC160X LED58/965 W60L120 SIA CAU	IP20	IK03
911401550547	RC160V LED54/930 W60L120 PSU	IP54/20	IK02
911401550647	RC160V LED58/940 W60L120 PSU	IP54/20	IK02
911401550747	RC160V LED58/965 W60L120 PSU	IP54/20	IK02
911401552347	RC160V LED54/930 W60L120 PSD	IP54/20	IK02
911401552447	RC160V LED58/940 W60L120 PSD	IP54/20	IK02
911401552547	RC160V LED58/965 W60L120 PSD	IP54/20	IK02
911401554747	RC160V LED54/930 W60L120 PSD CAU	IP54/20	IK02
911401554847	RC160V LED58/940 W60L120 PSD CAU	IP54/20	IK02
911401554947	RC160V LED58/965 W60L120 PSD CAU	IP54/20	IK02

Order Code	Full Product Name	Ingress protection code	Mech. impact protection code
911401556247	RC160V LED54/930 W60L120 PSU 54 CAU	IP54/20	IK02
911401556347	RC160V LED58/940 W60L120 PSU 54 CAU	IP54/20	IK02
911401556447	RC160V LED58/965 W60L120 PSU 54 CAU	IP54/20	IK02
911401556547	RC160X LED48/930 W60L120 WIA	IP54/20	IK02
911401556647	RC160X LED51/940 W60L120 WIA	IP54/20	IK02
911401556747	RC160X LED51/965 W60L120 WIA	IP54/20	IK02
911401556847	RC160X LED48/930 W60L120 WIA CAU	IP54/20	IK02
911401556947	RC160X LED51/940 W60L120 WIA CAU	IP54/20	IK02
911401557047	RC160X LED51/965 W60L120 WIA CAU	IP54/20	IK02
911401557847	RC190V LED37/935 W60L120 PSD OC 54 CAU	IP54/20	IK02
911401557947	RC190V LED40/940 W60L120 PSD OC 54 CAU	IP54/20	IK02
911401563247	RC190X LED40/940 W60L120 WIA OC CAU	IP54/20	IK02
911401565147	RC160V LED60/840 W60L120 PSU CN	IP54/20	IK02
911401565747	RC160V LED60/840 W60L120 PSU 54 CN	IP54/20	IK02
911401566247	RC160V LED60/840 W60L120 PSD CN	IP54/20	IK02
911401509832	RC160V LED37/830 W60L60 PSU	IP20	IK03
911401528132	RC160X LED37/830 W60L60 SIA CAU	IP20	IK03
911401528332	RC160X LED39/865 W60L60 SIA CAU	IP20	IK03
911401531347	RC160V LED37/830 W60L60 PSU	IP54/20	IK02
911401531447	RC160V LED39/840 W60L60 PSU	IP54/20	IK02
911401531547	RC160V LED39/865 W60L60 PSU	IP54/20	IK02
911401532247	RC160V LED37/830 W60L60 PSU OC	IP54/20	IK02
911401532347	RC160V LED39/840 W60L60 PSU OC	IP54/20	IK02
911401532447	RC160V LED39/865 W60L60 PSU OC	IP54/20	IK02
911401533147	RC160V LED27/830 W60L60 PSU 16	IP54/20	IK02
911401533247	RC160V LED29/840 W60L60 PSU 16	IP54/20	IK02
911401533347	RC160V LED29/865 W60L60 PSU 16	IP54/20	IK02
911401534047	RC160V LED37/830 W60L60 PSU 54	IP54/20	IK02
911401534147	RC160V LED39/840 W60L60 PSU 54	IP54/20	IK02
911401534247	RC160V LED39/865 W60L60 PSU 54	IP54/20	IK02
911401534947	RC160V LED37/830 W60L60 PSU OC 54	IP54/20	IK02
911401535047	RC160V LED39/840 W60L60 PSU OC 54	IP54/20	IK02
911401535147	RC160V LED39/865 W60L60 PSU OC 54	IP54/20	IK02
911401535847	RC160V LED27/830 W60L60 PSU 16 54	IP54/20	IK02
911401535947	RC160V LED29/840 W60L60 PSU 16 54	IP54/20	IK02
911401536047	RC160V LED29/865 W60L60 PSU 16 54	IP54/20	IK02
911401536747	RC160V LED37/830 W60L60 PSD	IP54/20	IK02
911401536847	RC160V LED39/840 W60L60 PSD	IP54/20	IK02
911401536947	RC160V LED39/865 W60L60 PSD	IP54/20	IK02
911401537647	RC160V LED37/830 W60L60 PSD OC	IP54/20	IK02
911401537747	RC160V LED39/840 W60L60 PSD OC	IP54/20	IK02
911401537847	RC160V LED39/865 W60L60 PSD OC	IP54/20	IK02

Order Code	Full Product Name	Ingress protection code	Mech. impact protection code
911401538547	RC160V LED27/830 W60L60 PSD 16	IP54/20	IK02
911401538647	RC160V LED29/840 W60L60 PSD 16	IP54/20	IK02
911401538747	RC160V LED29/865 W60L60 PSD 16	IP54/20	IK02
911401539447	RC160X LED37/830 W60L60 WIA	IP54/20	IK02
911401539547	RC160X LED39/840 W60L60 WIA	IP54/20	IK02
911401539647	RC160X LED39/865 W60L60 WIA	IP54/20	IK02
911401540047	RC160X LED37/830 W60L60 WIA OC	IP54/20	IK02
911401540147	RC160X LED39/840 W60L60 WIA OC	IP54/20	IK02
911401540247	RC160X LED39/865 W60L60 WIA OC	IP54/20	IK02
911401540647	RC160V LED37/830 W60L60 PSU CAU	IP54/20	IK02
911401540747	RC160V LED39/840 W60L60 PSU CAU	IP54/20	IK02
911401540847	RC160V LED39/865 W60L60 PSU CAU	IP54/20	IK02
911401541547	RC160V LED37/830 W60L60 PSD CAU	IP54/20	IK02
911401541647	RC160V LED39/840 W60L60 PSD CAU	IP54/20	IK02
911401541747	RC160V LED39/865 W60L60 PSD CAU	IP54/20	IK02
911401542447	RC160X LED37/830 W60L60 WIA CAU	IP54/20	IK02
911401542547	RC160X LED39/840 W60L60 WIA CAU	IP54/20	IK02
911401542647	RC160X LED39/865 W60L60 WIA CAU	IP54/20	IK02
911401543047	RC160V LED37/830 W60L60 PSU OC CAU	IP54/20	IK02
911401543132	RC160X LED35/930 W60L60 SIA CAU	IP20	IK03
911401543147	RC160V LED39/840 W60L60 PSU OC CAU	IP54/20	IK02
911401543232	RC160X LED37/940 W60L60 SIA CAU	IP20	IK03
911401543247	RC160V LED39/865 W60L60 PSU OC CAU	IP54/20	IK02
911401543332	RC160X LED37/965 W60L60 SIA CAU	IP20	IK03
911401543947	RC160V LED37/830 W60L60 PSD OC CAU	IP54/20	IK02
911401544047	RC160V LED39/840 W60L60 PSD OC CAU	IP54/20	IK02
911401544147	RC160V LED39/865 W60L60 PSD OC CAU	IP54/20	IK02
911401544847	RC160X LED37/830 W60L60 WIA OC CAU	IP54/20	IK02
911401544947	RC160X LED39/840 W60L60 WIA OC CAU	IP54/20	IK02
911401545047	RC160X LED39/865 W60L60 WIA OC CAU	IP54/20	IK02
911401545147	RC160V LED27/830 W60L60 PSU 16 CAU	IP54/20	IK02
911401545247	RC160V LED29/840 W60L60 PSU 16 CAU	IP54/20	IK02
911401545347	RC160V LED29/865 W60L60 PSU 16 CAU	IP54/20	IK02
911401546047	RC160V LED27/830 W60L60 PSD 16 CAU	IP54/20	IK02
911401546147	RC160V LED29/840 W60L60 PSD 16 CAU	IP54/20	IK02
911401546247	RC160V LED29/865 W60L60 PSD 16 CAU	IP54/20	IK02
911401546947	RC160X LED27/830 W60L60 WIA 16 CAU	IP54/20	IK02
911401547047	RC160X LED29/840 W60L60 WIA 16 CAU	IP54/20	IK02
911401547147	RC160X LED29/865 W60L60 WIA 16 CAU	IP54/20	IK02
911401548147	RC160V LED37/830 W60L60 PSU OC 54 CAU	IP54/20	IK02
911401548247	RC160V LED39/840 W60L60 PSU OC 54 CAU	IP54/20	IK02
911401548347	RC160V LED39/865 W60L60 PSU OC 54 CAU	IP54/20	IK02

Order Code	Full Product Name	Ingress protection code	Mech. impact protection code
911401549047	RC160V LED27/830 W60L60 PSU 16 54 CAU	IP54/20	IK02
911401549147	RC160V LED29/840 W60L60 PSU 16 54 CAU	IP54/20	IK02
911401549247	RC160V LED29/865 W60L60 PSU 16 54 CAU	IP54/20	IK02
911401549947	RC160V LED35/930 W60L60 PSU	IP54/20	IK02
911401550047	RC160V LED37/940 W60L60 PSU	IP54/20	IK02
911401550147	RC160V LED37/965 W60L60 PSU	IP54/20	IK02
911401550847	RC160V LED35/930 W60L60 PSU 54	IP54/20	IK02
911401550947	RC160V LED37/940 W60L60 PSU 54	IP54/20	IK02
911401551047	RC160V LED37/965 W60L60 PSU 54	IP54/20	IK02
911401551747	RC160V LED35/930 W60L60 PSD	IP54/20	IK02
911401551847	RC160V LED37/940 W60L60 PSD	IP54/20	IK02
911401551947	RC160V LED37/965 W60L60 PSD	IP54/20	IK02
911401552647	RC160X LED35/930 W60L60 WIA	IP54/20	IK02
911401552747	RC160X LED37/940 W60L60 WIA	IP54/20	IK02
911401552847	RC160X LED37/965 W60L60 WIA	IP54/20	IK02
911401553247	RC160V LED35/930 W60L60 PSU CAU	IP54/20	IK02
911401553347	RC160V LED37/940 W60L60 PSU CAU	IP54/20	IK02
911401553447	RC160V LED37/965 W60L60 PSU CAU	IP54/20	IK02
911401554147	RC160V LED35/930 W60L60 PSD CAU	IP54/20	IK02
911401554247	RC160V LED37/940 W60L60 PSD CAU	IP54/20	IK02
911401554347	RC160V LED37/965 W60L60 PSD CAU	IP54/20	IK02
911401555047	RC160X LED35/930 W60L60 WIA CAU	IP54/20	IK02
911401555147	RC160X LED37/940 W60L60 WIA CAU	IP54/20	IK02
911401555247	RC160X LED37/965 W60L60 WIA CAU	IP54/20	IK02
911401555647	RC160V LED35/930 W60L60 PSU 54 CAU	IP54/20	IK02
911401555747	RC160V LED37/940 W60L60 PSU 54 CAU	IP54/20	IK02
911401555847	RC160V LED37/965 W60L60 PSU 54 CAU	IP54/20	IK02
911401557147	RC190V LED34/930 W60L60 PSD OC 54 CAU	IP54/20	IK02
911401557247	RC190V LED34/935 W60L60 PSD OC 54 CAU	IP54/20	IK02
911401557347	RC190V LED36/940 W60L60 PSD OC 54 CAU	IP54/20	IK02
911401558047	RC160V LED37/8TW W60L60	IP54/20	IK02
911401558247	RC160V LED36/9TW W60L60	IP54/20	IK02
911401558447	RC160V LED36/9TW W60L60 54	IP54/20	IK02
911401558647	RC160V LED36/9TW W60L60 CAU	IP54/20	IK02
911401559047	RC160V LED37/830 W603L603 PSU UVG	IP54/20	IK02
911401559147	RC160V LED39/840 W603L603 PSU UVG	IP54/20	IK02
911401559247	RC160V LED39/865 W603L603 PSU UVG	IP54/20	IK02
911401560247	RC160V LED37/830 W60L60 PSU OC CPC	IP54/20	IK02
911401560347	RC160V LED39/840 W60L60 PSU OC CPC	IP54/20	IK02
911401560447	RC160V LED39/865 W60L60 PSU OC CPC	IP54/20	IK02
911401563047	RC190X LED36/940 W60L60 WIA OC CAU	IP54/20	IK02
911401563347	SP160P LED37/940 W60L60 PSU	IP54/20	IK02

Order Code	Full Product Name	Ingress protection code	Mech. impact protection code
911401563547	SP160P LED37/940 W60L60 PSU OC	IP54/20	IK02
911401563747	SP160P LED37/940 W60L60 PSD	IP54/20	IK02
911401563947	SP160P LED37/940 W60L60 PSD OC	IP54/20	IK02
911401564147	SP160P LED37/940 W60L60 PSU CN	IP54/20	IK02
911401564347	SP160P LED37/940 W60L60 PSU OC CN	IP54/20	IK02
911401564547	SP160P LED37/940 W60L60 PSD CN	IP54/20	IK02
911401564747	SP160P LED37/940 W60L60 PSD OC CN	IP54/20	IK02
911401564947	RC160V LED39/840 W60L60 PSU CN	IP54/20	IK02
911401565247	RC160V LED39/840 W60L60 PSU OC CN	IP54/20	IK02
911401565447	RC160V LED60/840 W60L120 PSU OC CN	IP54/20	IK02
911401565547	RC160V LED39/840 W60L60 PSU 54 CN	IP54/20	IK02
911401566047	RC160V LED39/840 W60L60 PSD CN	IP54/20	IK02
911401566347	RC160X LED39/840 W60L60 WIA CN	IP54/20	IK02

Initial Performance (IEC Compliant)

Order Code	Full Product Name	Luminous flux tolerance
911401524932	RC160X LED39/840 W30L120 SIA	+/-10%
911401528432	RC160X LED37/830 W30L120 SIA CAU	+/-10%
911401528632	RC160X LED39/865 W30L120 SIA CAU	+/-10%
911401531647	RC160V LED37/830 W30L120 PSU	-10% / +10%
911401531747	RC160V LED39/840 W30L120 PSU	-10% / +10%
911401531847	RC160V LED39/865 W30L120 PSU	-10% / +10%
911401532547	RC160V LED37/830 W30L120 PSU OC	-10% / +10%
911401532647	RC160V LED39/840 W30L120 PSU OC	-10% / +10%
911401532747	RC160V LED39/865 W30L120 PSU OC	-10% / +10%
911401537047	RC160V LED37/830 W30L120 PSD	-10% / +10%
911401537147	RC160V LED39/840 W30L120 PSD	-10% / +10%
911401537247	RC160V LED39/865 W30L120 PSD	-10% / +10%
911401543432	RC160X LED35/930 W30L120 SIA CAU	+/-10%
911401543532	RC160X LED37/940 W30L120 SIA CAU	+/-10%
911401543632	RC160X LED37/965 W30L120 SIA CAU	+/-10%
911401550247	RC160V LED35/930 W30L120 PSU	-10% / +10%
911401550347	RC160V LED37/940 W30L120 PSU	-10% / +10%
911401550447	RC160V LED37/965 W30L120 PSU	-10% / +10%
911401552047	RC160V LED35/930 W30L120 PSD	-10% / +10%
911401552147	RC160V LED37/940 W30L120 PSD	-10% / +10%
911401552247	RC160V LED37/965 W30L120 PSD	-10% / +10%
911401552947	RC160X LED35/930 W30L120 WIA	-10% / +10%
911401553047	RC160X LED37/940 W30L120 WIA	-10% / +10%
911401553147	RC160X LED37/965 W30L120 WIA	-10% / +10%
911401554447	RC160V LED35/930 W30L120 PSD CAU	-10% / +10%

Order Code	Full Product Name	Luminous flux tolerance
911401554547	RC160V LED37/940 W30L120 PSD CAU	-10% / +10%
911401554647	RC160V LED37/965 W30L120 PSD CAU	-10% / +10%
911401555347	RC160X LED35/930 W30L120 WIA CAU	-10% / +10%
911401555447	RC160X LED37/940 W30L120 WIA CAU	-10% / +10%
911401555547	RC160X LED37/965 W30L120 WIA CAU	-10% / +10%
911401555947	RC160V LED35/930 W30L120 PSU 54 CAU	-10% / +10%
911401556047	RC160V LED37/940 W30L120 PSU 54 CAU	-10% / +10%
911401556147	RC160V LED37/965 W30L120 PSU 54 CAU	-10% / +10%
911401557447	RC190V LED34/930 W30L120 PSD OC 54 CAU	-10% / +10%
911401557547	RC190V LED34/935 W30L120 PSD OC 54 CAU	-10% / +10%
911401557647	RC190V LED36/940 W30L120 PSD OC 54 CAU	-10% / +10%
911401558147	RC160V LED38/8TW W30L120	-10% / +10%
911401558347	RC160V LED37/9TW W30L120	-10% / +10%
911401558547	RC160V LED37/9TW W30L120 54	-10% / +10%
911401558747	RC160V LED37/9TW W30L120 CAU	-10% / +10%
911401563147	RC190X LED36/940 W30L120 WIA OC CAU	-10% / +10%
911401563447	SP160P LED37/940 W30L120 PSU	-10% / +10%
911401563647	SP160P LED37/940 W30L120 PSU OC	-10% / +10%
911401563847	SP160P LED37/940 W30L120 PSD	-10% / +10%
911401564047	SP160P LED37/940 W30L120 PSD OC	-10% / +10%
911401564247	SP160P LED37/940 W30L120 PSU CN	-10% / +10%
911401564447	SP160P LED37/940 W30L120 PSU OC CN	-10% / +10%
911401564647	SP160P LED37/940 W30L120 PSD CN	-10% / +10%
911401564847	SP160P LED37/940 W30L120 PSD OC CN	-10% / +10%
911401565047	RC160V LED39/840 W30L120 PSU CN	-10% / +10%
911401565347	RC160V LED39/840 W30L120 PSU OC CN	-10% / +10%
911401565647	RC160V LED39/840 W30L120 PSU 54 CN	-10% / +10%
911401566147	RC160V LED39/840 W30L120 PSD CN	-10% / +10%
911401566447	RC160X LED39/840 W30L120 WIA CN	-10% / +10%
911401528732	RC160X LED57/830 W60L120 SIA CAU	+/-10%
911401528932	RC160X LED60/865 W60L120 SIA CAU	+/-10%
911401531947	RC160V LED57/830 W60L120 PSU	-10% / +10%
911401532047	RC160V LED60/840 W60L120 PSU	-10% / +10%
911401532147	RC160V LED60/865 W60L120 PSU	-10% / +10%
911401532847	RC160V LED57/830 W60L120 PSU OC	-10% / +10%
911401532947	RC160V LED60/840 W60L120 PSU OC	-10% / +10%
911401533047	RC160V LED60/865 W60L120 PSU OC	-10% / +10%
911401537347	RC160V LED57/830 W60L120 PSD	-10% / +10%
911401537447	RC160V LED60/840 W60L120 PSD	-10% / +10%
911401537547	RC160V LED60/865 W60L120 PSD	-10% / +10%
911401543732	RC160X LED54/930 W60L120 SIA CAU	+/-10%
911401543832	RC160X LED58/940 W60L120 SIA CAU	+/-10%

Order Code	Full Product Name	Luminous flux tolerance
911401543932	RC160X LED58/965 W60L120 SIA CAU	+/-10%
911401550547	RC160V LED54/930 W60L120 PSU	-10% / +10%
911401550647	RC160V LED58/940 W60L120 PSU	-10% / +10%
911401550747	RC160V LED58/965 W60L120 PSU	-10% / +10%
911401552347	RC160V LED54/930 W60L120 PSD	-10% / +10%
911401552447	RC160V LED58/940 W60L120 PSD	-10% / +10%
911401552547	RC160V LED58/965 W60L120 PSD	-10% / +10%
911401554747	RC160V LED54/930 W60L120 PSD CAU	-10% / +10%
911401554847	RC160V LED58/940 W60L120 PSD CAU	-10% / +10%
911401554947	RC160V LED58/965 W60L120 PSD CAU	-10% / +10%
911401556247	RC160V LED54/930 W60L120 PSU 54 CAU	-10% / +10%
911401556347	RC160V LED58/940 W60L120 PSU 54 CAU	-10% / +10%
911401556447	RC160V LED58/965 W60L120 PSU 54 CAU	-10% / +10%
911401556547	RC160X LED48/930 W60L120 WIA	-10% / +10%
911401556647	RC160X LED51/940 W60L120 WIA	-10% / +10%
911401556747	RC160X LED51/965 W60L120 WIA	-10% / +10%
911401556847	RC160X LED48/930 W60L120 WIA CAU	-10% / +10%
911401556947	RC160X LED51/940 W60L120 WIA CAU	-10% / +10%
911401557047	RC160X LED51/965 W60L120 WIA CAU	-10% / +10%
911401557847	RC190V LED37/935 W60L120 PSD OC 54 CAU	-10% / +10%
911401557947	RC190V LED40/940 W60L120 PSD OC 54 CAU	-10% / +10%
911401563247	RC190X LED40/940 W60L120 WIA OC CAU	-10% / +10%
911401565147	RC160V LED60/840 W60L120 PSU CN	-10% / +10%
911401565747	RC160V LED60/840 W60L120 PSU 54 CN	-10% / +10%
911401566247	RC160V LED60/840 W60L120 PSD CN	-10% / +10%
911401509832	RC160V LED37/830 W60L60 PSU	+/-10%
911401528132	RC160X LED37/830 W60L60 SIA CAU	+/-10%
911401528332	RC160X LED39/865 W60L60 SIA CAU	+/-10%
911401531347	RC160V LED37/830 W60L60 PSU	-10% / +10%
911401531447	RC160V LED39/840 W60L60 PSU	-10% / +10%
911401531547	RC160V LED39/865 W60L60 PSU	-10% / +10%
911401532247	RC160V LED37/830 W60L60 PSU OC	-10% / +10%
911401532347	RC160V LED39/840 W60L60 PSU OC	-10% / +10%
911401532447	RC160V LED39/865 W60L60 PSU OC	-10% / +10%
911401533147	RC160V LED27/830 W60L60 PSU 16	-10% / +10%
911401533247	RC160V LED29/840 W60L60 PSU 16	-10% / +10%
911401533347	RC160V LED29/865 W60L60 PSU 16	-10% / +10%
911401534047	RC160V LED37/830 W60L60 PSU 54	-10% / +10%
911401534147	RC160V LED39/840 W60L60 PSU 54	-10% / +10%
911401534247	RC160V LED39/865 W60L60 PSU 54	-10% / +10%
911401534947	RC160V LED37/830 W60L60 PSU OC 54	-10% / +10%
911401535047	RC160V LED39/840 W60L60 PSU OC 54	-10% / +10%

Order Code	Full Product Name	Luminous flux tolerance
911401535147	RC160V LED39/865 W60L60 PSU OC 54	-10% / +10%
911401535847	RC160V LED27/830 W60L60 PSU 16 54	-10% / +10%
911401535947	RC160V LED29/840 W60L60 PSU 16 54	-10% / +10%
911401536047	RC160V LED29/865 W60L60 PSU 16 54	-10% / +10%
911401536747	RC160V LED37/830 W60L60 PSD	-10% / +10%
911401536847	RC160V LED39/840 W60L60 PSD	-10% / +10%
911401536947	RC160V LED39/865 W60L60 PSD	-10% / +10%
911401537647	RC160V LED37/830 W60L60 PSD OC	-10% / +10%
911401537747	RC160V LED39/840 W60L60 PSD OC	-10% / +10%
911401537847	RC160V LED39/865 W60L60 PSD OC	-10% / +10%
911401538547	RC160V LED27/830 W60L60 PSD 16	-10% / +10%
911401538647	RC160V LED29/840 W60L60 PSD 16	-10% / +10%
911401538747	RC160V LED29/865 W60L60 PSD 16	-10% / +10%
911401539447	RC160X LED37/830 W60L60 WIA	-10% / +10%
911401539547	RC160X LED39/840 W60L60 WIA	-10% / +10%
911401539647	RC160X LED39/865 W60L60 WIA	-10% / +10%
911401540047	RC160X LED37/830 W60L60 WIA OC	-10% / +10%
911401540147	RC160X LED39/840 W60L60 WIA OC	-10% / +10%
911401540247	RC160X LED39/865 W60L60 WIA OC	-10% / +10%
911401540647	RC160V LED37/830 W60L60 PSU CAU	-10% / +10%
911401540747	RC160V LED39/840 W60L60 PSU CAU	-10% / +10%
911401540847	RC160V LED39/865 W60L60 PSU CAU	-10% / +10%
911401541547	RC160V LED37/830 W60L60 PSD CAU	-10% / +10%
911401541647	RC160V LED39/840 W60L60 PSD CAU	-10% / +10%
911401541747	RC160V LED39/865 W60L60 PSD CAU	-10% / +10%
911401542447	RC160X LED37/830 W60L60 WIA CAU	-10% / +10%
911401542547	RC160X LED39/840 W60L60 WIA CAU	-10% / +10%
911401542647	RC160X LED39/865 W60L60 WIA CAU	-10% / +10%
911401543047	RC160V LED37/830 W60L60 PSU OC CAU	-10% / +10%
911401543132	RC160X LED35/930 W60L60 SIA CAU	+/-10%
911401543147	RC160V LED39/840 W60L60 PSU OC CAU	-10% / +10%
911401543232	RC160X LED37/940 W60L60 SIA CAU	+/-10%
911401543247	RC160V LED39/865 W60L60 PSU OC CAU	-10% / +10%
911401543332	RC160X LED37/965 W60L60 SIA CAU	+/-10%
911401543947	RC160V LED37/830 W60L60 PSD OC CAU	-10% / +10%
911401544047	RC160V LED39/840 W60L60 PSD OC CAU	-10% / +10%
911401544147	RC160V LED39/865 W60L60 PSD OC CAU	-10% / +10%
911401544847	RC160X LED37/830 W60L60 WIA OC CAU	-10% / +10%
911401544947	RC160X LED39/840 W60L60 WIA OC CAU	-10% / +10%
911401545047	RC160X LED39/865 W60L60 WIA OC CAU	-10% / +10%
911401545147	RC160V LED27/830 W60L60 PSU 16 CAU	-10% / +10%
911401545247	RC160V LED29/840 W60L60 PSU 16 CAU	-10% / +10%

Order Code	Full Product Name	Luminous flux tolerance
911401545347	RC160V LED29/865 W60L60 PSU 16 CAU	-10% / +10%
911401546047	RC160V LED27/830 W60L60 PSD 16 CAU	-10% / +10%
911401546147	RC160V LED29/840 W60L60 PSD 16 CAU	-10% / +10%
911401546247	RC160V LED29/865 W60L60 PSD 16 CAU	-10% / +10%
911401546947	RC160X LED27/830 W60L60 WIA 16 CAU	-10% / +10%
911401547047	RC160X LED29/840 W60L60 WIA 16 CAU	-10% / +10%
911401547147	RC160X LED29/865 W60L60 WIA 16 CAU	-10% / +10%
911401548147	RC160V LED37/830 W60L60 PSU OC 54 CAU	-10% / +10%
911401548247	RC160V LED39/840 W60L60 PSU OC 54 CAU	-10% / +10%
911401548347	RC160V LED39/865 W60L60 PSU OC 54 CAU	-10% / +10%
911401549047	RC160V LED27/830 W60L60 PSU 16 54 CAU	-10% / +10%
911401549147	RC160V LED29/840 W60L60 PSU 16 54 CAU	-10% / +10%
911401549247	RC160V LED29/865 W60L60 PSU 16 54 CAU	-10% / +10%
911401549947	RC160V LED35/930 W60L60 PSU	-10% / +10%
911401550047	RC160V LED37/940 W60L60 PSU	-10% / +10%
911401550147	RC160V LED37/965 W60L60 PSU	-10% / +10%
911401550847	RC160V LED35/930 W60L60 PSU 54	-10% / +10%
911401550947	RC160V LED37/940 W60L60 PSU 54	-10% / +10%
911401551047	RC160V LED37/965 W60L60 PSU 54	-10% / +10%
911401551747	RC160V LED35/930 W60L60 PSD	-10% / +10%
911401551847	RC160V LED37/940 W60L60 PSD	-10% / +10%
911401551947	RC160V LED37/965 W60L60 PSD	-10% / +10%
911401552647	RC160X LED35/930 W60L60 WIA	-10% / +10%
911401552747	RC160X LED37/940 W60L60 WIA	-10% / +10%
911401552847	RC160X LED37/965 W60L60 WIA	-10% / +10%
911401553247	RC160V LED35/930 W60L60 PSU CAU	-10% / +10%
911401553347	RC160V LED37/940 W60L60 PSU CAU	-10% / +10%
911401553447	RC160V LED37/965 W60L60 PSU CAU	-10% / +10%
911401554147	RC160V LED35/930 W60L60 PSD CAU	-10% / +10%
911401554247	RC160V LED37/940 W60L60 PSD CAU	-10% / +10%
911401554347	RC160V LED37/965 W60L60 PSD CAU	-10% / +10%
911401555047	RC160X LED35/930 W60L60 WIA CAU	-10% / +10%
911401555147	RC160X LED37/940 W60L60 WIA CAU	-10% / +10%
911401555247	RC160X LED37/965 W60L60 WIA CAU	-10% / +10%
911401555647	RC160V LED35/930 W60L60 PSU 54 CAU	-10% / +10%
911401555747	RC160V LED37/940 W60L60 PSU 54 CAU	-10% / +10%
911401555847	RC160V LED37/965 W60L60 PSU 54 CAU	-10% / +10%
911401557147	RC190V LED34/930 W60L60 PSD OC 54 CAU	-10% / +10%
911401557247	RC190V LED34/935 W60L60 PSD OC 54 CAU	-10% / +10%
911401557347	RC190V LED36/940 W60L60 PSD OC 54 CAU	-10% / +10%
911401558047	RC160V LED37/8TW W60L60	-10% / +10%
911401558247	RC160V LED36/9TW W60L60	-10% / +10%

Order Code	Full Product Name	Luminous flux tolerance
911401558447	RC160V LED36/9TW W60L60 54	-10% / +10%
911401558647	RC160V LED36/9TW W60L60 CAU	-10% / +10%
911401559047	RC160V LED37/830 W603L603 PSU UVG	-10% / +10%
911401559147	RC160V LED39/840 W603L603 PSU UVG	-10% / +10%
911401559247	RC160V LED39/865 W603L603 PSU UVG	-10% / +10%
911401560247	RC160V LED37/830 W60L60 PSU OC CPC	-10% / +10%
911401560347	RC160V LED39/840 W60L60 PSU OC CPC	-10% / +10%
911401560447	RC160V LED39/865 W60L60 PSU OC CPC	-10% / +10%
911401563047	RC190X LED36/940 W60L60 WIA OC CAU	-10% / +10%
911401563347	SP160P LED37/940 W60L60 PSU	-10% / +10%
911401563547	SP160P LED37/940 W60L60 PSU OC	-10% / +10%
911401563747	SP160P LED37/940 W60L60 PSD	-10% / +10%
911401563947	SP160P LED37/940 W60L60 PSD OC	-10% / +10%
911401564147	SP160P LED37/940 W60L60 PSU CN	-10% / +10%
911401564347	SP160P LED37/940 W60L60 PSU OC CN	-10% / +10%
911401564547	SP160P LED37/940 W60L60 PSD CN	-10% / +10%
911401564747	SP160P LED37/940 W60L60 PSD OC CN	-10% / +10%
911401564947	RC160V LED39/840 W60L60 PSU CN	-10% / +10%
911401565247	RC160V LED39/840 W60L60 PSU OC CN	-10% / +10%
911401565447	RC160V LED60/840 W60L120 PSU OC CN	-10% / +10%
911401565547	RC160V LED39/840 W60L60 PSU 54 CN	-10% / +10%
911401566047	RC160V LED39/840 W60L60 PSD CN	-10% / +10%
911401566347	RC160X LED39/840 W60L60 WIA CN	-10% / +10%

© 2026 Signify Holding. All rights reserved. The information provided herein is subject to change, without notice. Signify does not give any representation or warranty as to the accuracy or completeness of the information included herein and shall not be liable for any action in reliance thereon. The information presented in this document is not intended as any commercial offer and does not form part of any quotation or contract, unless otherwise agreed by Signify. Philips and the Philips Shield Emblem are registered trademarks of Koninklijke Philips N.V.