PHILIPS

MASTER CosmoWhite CPO-TW & CPO-TW Xtra

DCPOTW



The most energy-efficient reliable white light solution for Outdoor

New-generation ceramic metal halide lamps used in Outdoor offering efficient and pleasant white light

Benefits

- Attractive white light
- Excellent optical efficacy allows greater spacing between luminaires, thereby reducing investment
- Energy savings of up to 60% and very low cost of ownership

Applications

- Urban public lighting for city centers, residential areas and roads
- Lamp optimized for horizontal position; when positioned vertically, the lifetime specification is much lower (as much as - 40%)

Features

- Highly efficient white light with extremely high system efficacy
- Long reliable lifetime; new Xtra range offering service life of up to 6 years
- Unique new burner design and positioning in combination with optimum lamp fixation (PGZ12) ensures excellent optical efficacy
- Compact size: 50% smaller than SON/HPL systems
- New electronic gear platform including dimming options

- Use only in totally enclosed luminaire, even during testing (IEC61167, IEC 62035, IEC60598)
- The luminaire must be able to contain hot lamp parts if the lamp ruptures
- Use only with electronic control gear
- Control gear must include end-of-life protection (IEC61167, IEC 62035)
- A lamp breaking is extremely unlikely to have any impact on your health. If a lamp breaks, ventilate the room for 30 minutes and remove the parts, preferably with gloves. Put them in a sealed plastic bag and take it to your local waste facilities for recycling. Do not use a vacuum cleaner.

Versions



LPPR CPO-TW 0003



LPPR CPO-TW 0001



LPPR CPO-TW 45W 628 PGZ12

Dimensional drawing

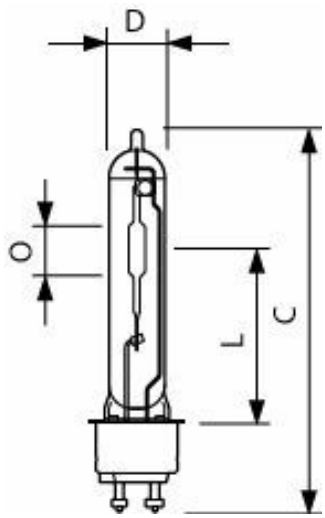

Product	D (max)	D	O	L	C (max)
MST CosmoWh CPO-TW Xtra 140W/728 PGZ12	20 mm	19 mm	22 mm	66 mm	150 mm
MST CosmoWh CPO-TW Xtra 45W/628 PGZ12	20 mm	19 mm	14 mm	59 mm	132 mm
MST CosmoWh CPO-TW Xtra 60W/728 PGZ12	20 mm	19 mm	14 mm	59 mm	132 mm
MST CosmoWh CPO-TW Xtra 90W/728 PGZ12	20 mm	19 mm	18 mm	66 mm	143 mm

General Information

Cap-Base	PGZ12
Operating Position	UNIVERSAL [Any or Universal (U)]

Light Technical

Color Designation	White (WH)
Chromaticity Coordinate X (Nom)	0.447
Chromaticity Coordinate Y (Nom)	0.4
Correlated Color Temperature (Nom)	2800 K

Controls and Dimming

Dimmable	Yes

Mechanical and Housing

Bulb Finish	Clear
Bulb Shape	T19

Light Technical

Order Code	Full Product Name	Luminous Flux	Luminous Efficacy (rated) (Nom)	Color rendering index (CRI)
928088805127	MST CosmoWh CPO-TW Xtra 140W/728 PGZ12	17,600 lm	125 lm/W	72
928088505127	MST CosmoWh CPO-TW Xtra 60W/728 PGZ12	7,200 lm	120 lm/W	73
928093505127	MST CosmoWh CPO-TW Xtra 90W/728 PGZ12	10,800 lm	120 lm/W	70
928083805127	MST CosmoWh CPO-TW Xtra 45W/628 PGZ12	4,900 lm	110 lm/W	66

Operating and Electrical

Order Code	Full Product Name	Power Consumption	Voltage (Nom)
928088805127	MST CosmoWh CPO-TW Xtra 140W/728 PGZ12	141.0 W	94 V
928088505127	MST CosmoWh CPO-TW Xtra 60W/728 PGZ12	60.0 W	92 V
928093505127	MST CosmoWh CPO-TW Xtra 90W/728 PGZ12	90.0 W	92 V
928083805127	MST CosmoWh CPO-TW Xtra 45W/628 PGZ12	44.5 W	91 V

Approval and Application

Order Code	Full Product Name	Mercury (Hg) Content (Max)	Mercury (Hg) Content (Nom)	Energy Consumption kWh/ 1000 h
928088805127	MST CosmoWh CPO-TW Xtra 140W/728 PGZ12	3.9 mg	3.9 mg	141 kWh
928088505127	MST CosmoWh CPO-TW Xtra 60W/728 PGZ12	2 mg	2.0 mg	60 kWh
928093505127	MST CosmoWh CPO-TW Xtra 90W/728 PGZ12	3 mg	3.0 mg	90 kWh
928083805127	MST CosmoWh CPO-TW Xtra 45W/628 PGZ12	2 mg	2.0 mg	45 kWh

© 2026 Signify Holding. All rights reserved. The information provided herein is subject to change, without notice. Signify does not give any representation or warranty as to the accuracy or completeness of the information included herein and shall not be liable for any action in reliance thereon. The information presented in this document is not intended as any commercial offer and does not form part of any quotation or contract, unless otherwise agreed by Signify. Philips and the Philips Shield Emblem are registered trademarks of Koninklijke Philips N.V.