JGB794 MBP-T 750 60 BK

912300023369



JGB794 | CLASSICSTREET BRACKETS SUSPENDED, Pole-mounting bracket 2 arms 180°, 750 mm, Black

Recalling the iconic beauty of 20th-century street lanterns, ClassicStreet combines elegant design with the subtle details of heritage luminaires while meeting today's urban lighting requirements. Though echoing the past, the ClassicStreet luminaire is very much shaped for the future. Its gently curved design, together with dedicated brackets and poles, creates a contemporary look that beautifies our cities and creates distinctive and warm night- and daytime ambiences. Not only in historical and traditional architectural settings, but also in more modern urban environments too. Designed around its LED engine, ClassicStreet delivers outstanding levels of lighting and energy performance.

Mechanical and Housing

Bracket length	750 mm
Bracket color	Black
Bracket type	Pole-mounting bracket 2 arms 180°
Net Weight (Piece)	6.900 kg

Approval and Application

CE mark	Yes
EU RoHS compliant	Yes

Sustainability Data

Non-virgin material ratio of the packaging	Cardboard > 80% recycled
Packaging Recyclable content ratio	Cardboard recycling rate > 80%
Packaging Material	Cardboard

Dimensional drawing

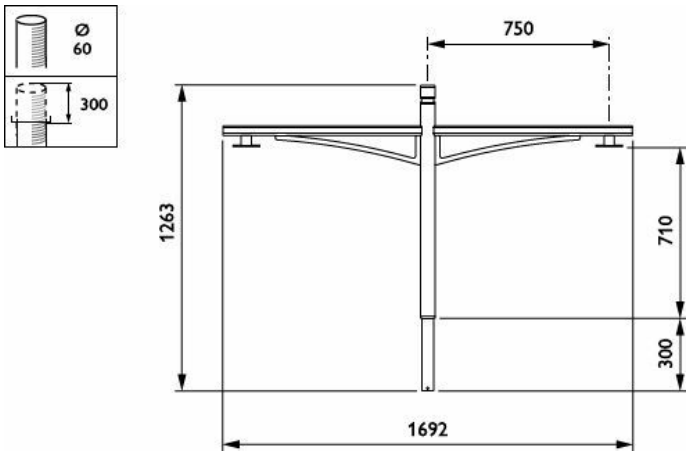

Product Data

Order product name	JGB794 MBP-T 750 60 BK
Full product name	JGB794 MBP-T 750 60 BK
Full product code	871794321646800
Order code	912300023369
Material Nr. (12NC)	912300023369
Numerator - Quantity Per Pack	1
EAN/UPC - Product/Case	8717943216468
Numerator - Packs per outer box	1
EAN/UPC - Case	8717943216468
Product family code	JGB794 [CLASSICSTREET BRACKETS SUSPENDED]

Related Documents

Documents and certificates	Document Name	Download
Installation Instructions	ClassicStreet-BDP794_ BPP794_BSP794_BVP794-II.pdf	Download

© 2026 Signify Holding. All rights reserved. The information provided herein is subject to change, without notice. Signify does not give any representation or warranty as to the accuracy or completeness of the information included herein and shall not be liable for any action in reliance thereon. The information presented in this document is not intended as any commercial offer and does not form part of any quotation or contract, unless otherwise agreed by Signify. All trademarks are owned by Signify Holding or their respective owners.