PHILIPS

DN150B LED21S/830_840 PSD WH G2

911401895687



GreenSpace Slim Downlight G2, 18 W, 2100 lm, 3000 K, 4000 K, DALI, Beam angle 90°, Symmetrical, Textured, IP20(IP44 front)

GreenSpace Slim downlight is ultra-thin product for general lighting applications with limited build-in height, which is suitable for a series of lighting applications in general indoor areas. Available in a wide variety of lumen packs, cut out size, selectable CCT with less SKUs and dimming option.

General Information

Number of gear units	1 unit
Gear	EB [Electronic]
Driver included	Yes
Light source engine type	LED
Warranty period	5 years

Light Technical

Luminous Flux	2,100 lm
Correlated Color Temperature (Nom)	3000 K
Luminous Efficacy (rated) (Nom)	117 lm/W
Color rendering index (CRI)	≥80
Number of light sources	1
Beam angle of light source	90 degree(s)
Light source color	830 warm white, 840 neutral white
Optic type	Beam angle 90°
Luminaire light beam spread	90°
Unified glare rating CEN	27

Operating and Electrical

Input Voltage	220 to 240 V
Line Frequency	50 or 60 Hz
Inrush current	16.5 A
Inrush time	0.177 ms
Power Consumption	18 W
Power Factor (Fraction)	0.9

Connection	Push-in connector 4-pole
Cable	-
Number of products on MCB of 16 A type B	36
Suitable for random switching	No
Protection class IEC	Safety class II

Controls and Dimming

Dimmable	DALI
Control interface	DALI
Maximum dim level	1%

Mechanical and Housing

Housing Material	Aluminum die-cast
Reflector material	Polycarbonate
Optic material	Polymethyl methacrylate
Optical cover material	Polycarbonate
Housing Color	White RAL 9003
Mounting device	Recessed mounting box round
Optical cover finish	Textured
Overall height	24 mm
Overall diameter	218 mm
Ingress protection code	IP20(IP44 front)
Mech. impact protection code	IK03 [0.3 J]
Optical cover type	Microprismatic cover
Net Weight (Piece)	0.420 kg

Approval and Application

Glow-wire test	Temperature 650 °C, duration 30 s
Flammability mark	For mounting on normally flammable surfaces
CE mark	Yes
ENEC mark	-
Photobiological risk	Photobiological risk group 0 @200mm to EN62778
Photobiological risk specification	0.2 m
EU RoHS compliant	Yes
Performance ambient temperature Tq	25 °C
Ambient temperature range	-20 to +40 °C

Initial Performance (IEC Compliant)

Luminous flux tolerance	-10%,+15%
Initial chromaticity	(0.43,0.40) SDCM<3; (0.38,0.38) SDCM<3
Power consumption tolerance	+/-10%

Product Data

Order product name	DN150B LED21S/830_840 PSD WH G2
Full product name	DN150B LED21S/830_840 PSD WH G2
Full product code	872110331709499
Order code	911401895687
Material Nr. (12NC)	911401895687
Numerator - Quantity Per Pack	1
EAN/UPC - Product/Case	8721103317094
Numerator - Packs per outer box	20
EAN/UPC - Case	8721103317247

Dimensional drawing

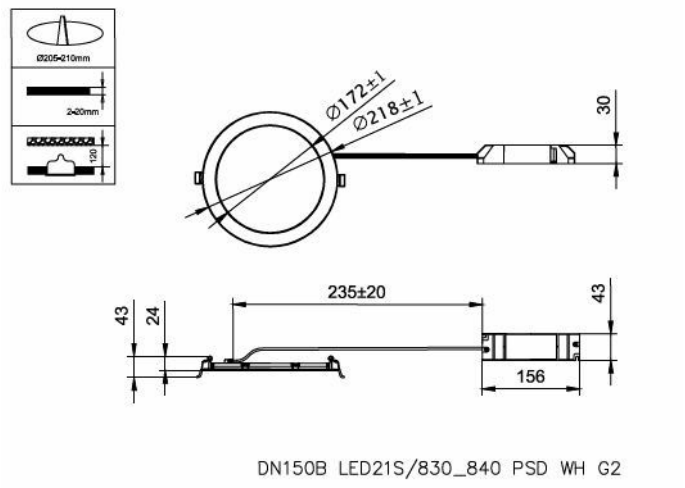

Related Documents

Photometry and lighting design	Document Name	Download
IES File	DN150B-LED21S-830-840-PSD-WH-G2-840.ies	Download

© 2026 Signify Holding. All rights reserved. The information provided herein is subject to change, without notice. Signify does not give any representation or warranty as to the accuracy or completeness of the information included herein and shall not be liable for any action in reliance thereon. The information presented in this document is not intended as any commercial offer and does not form part of any quotation or contract, unless otherwise agreed by Signify. Philips and the Philips Shield Emblem are registered trademarks of Koninklijke Philips N.V.