PHILIPS

## HF-Regulator II for TL5 lamps

HFR2ANT5



# HF-Regulator II for TL5 lamps – Dimming: a next step in energy saving

High-frequency electronic dimming ballast, using the analog protocol (1-10 V) for TL5 HE/HO and TL5 Eco lamps. The ballast is primarily designed for Indoor application. For outdoor application, the luminaire should be minimum ClassIand need to be sufficiently protected against water & dust. The installation should also be guard against any lightening surge or any other necessary electrical protection as deemed in such typical installation & application.

### Benefits

- The lamp power can be dimmed from 1 to 100% via the Analog control input (in accordance with the 1-10 V industry standard)
- Compliant with European and Asian norms and suitable for emergency lighting systems
- HF operation improves light quality, lamp lifetime
- Combined with controls, additional energy savings can be achieved

### Applications

- Indoor, general and task lighting applications in combination with lighting control systems (personal control, daylight linking and/or movement detection)

### Features

- Programmed start: flicker-free ignition < 0.5 seconds and striation-free operation, no stroboscopic effects. Preheating the lamp electrodes enables the lamps to be switched on and off without reducing life
- Smart power ensures constant light, independent of mains fluctuations

- Up to 60% reduction in energy consumption by using automatic lighting control systems
- Stop circuit is activated within 5 seconds in the event of lamp failure (safety stop), and ballast resets automatically after lamp replacement

## Versions



GPPR R2ANTLPL PHL

## Dimensional drawing

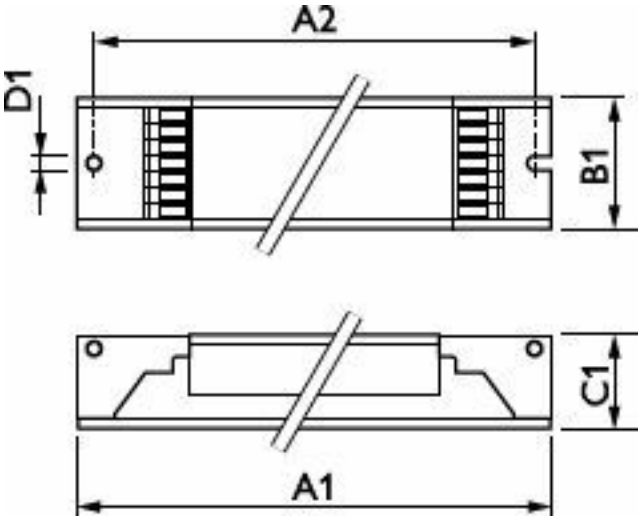


| Product | D1 | C1 | A1 | A2 | B1 |
|---|---|---|---|---|---|
| HF-R 1 14-35 TL5 EII 220-240V 50/60Hz | 4.2 mm | 22 mm | 360 mm | 350 mm | 30 mm |
| HF-R 249 TL5 EII 220-240V 50/60Hz | 4.2 mm | 22 mm | 360 mm | 350 mm | 30 mm |

### Operating and Electrical

| | |
|---|---|
| Input Voltage | 220 to 240 V |
| Line Frequency | 50 to 60 Hz |
| Input Frequency | 50 to 60 Hz |

### Mechanical and Housing

| | |
|---|---|
| Housing | L 360x30x21 |

### Approval and Application

| | |
|---|---|
| Energy Efficiency Index | A1 BAT |

## Operating and Electrical

| Order Code | Full Product Name | Number of Products on MCB (16A Type B) (Nom) |
|---|---|---|
| 913700608766 | HF-R 249 TL5 EII 220-240V 50/60Hz | 12 |
| 913700619866 | HF-R 1 14-35 TL5 EII 220-240V 50/60Hz | 28 |

© 2026 Signify Holding. All rights reserved. The information provided herein is subject to change, without notice. Signify does not give any representation or warranty as to the accuracy or completeness of the information included herein and shall not be liable for any action in reliance thereon. The information presented in this document is not intended as any commercial offer and does not form part of any quotation or contract, unless otherwise agreed by Signify. Philips and the Philips Shield Emblem are registered trademarks of Koninklijke Philips N.V.