PHILIPS

RoadFlair Gen2

BRP49X



LED road lighting all-round player

RoadFlair Gen2 is brand new design road lighting product family, set to meet customers' all-round requirements, including high lumen efficacy for energy saving and sustainability, aesthetic design for nice shape and appearance, quality material and components for product reliability and long lifetime, professional optics for various applications fulfillment, dimming and system control interface for improving municipal operations and offering future-proof features. RoadFlair Gen2 competitive price would help on the acceleration of road lighting LED transformation, to a more sustainable society and smarter city.

Benefits

- High lumen efficacy for energy saving.
- Robust quality and reliability.
- Professional optics for various road applications.
- Control interface for system compatibility.
- Economical LED alternative to conventional street lights.

Applications

- Pedestrian Road
- Highway Road
- Residential Road
- Interchange

Features

- Four housing types covering up to 43Klm
- Typical 140lm/W
- 1-10V dimming interface
- 100Khrs lifetime
- 10kV or 15kV Surge protection Device

Versions



RoadFlair Gen2 BRP49X



RoadFlair Gen2 BRP49X



RoadFlair Gen2 BRP49X



RoadFlair Gen2 BRP49X

Dimensional drawing

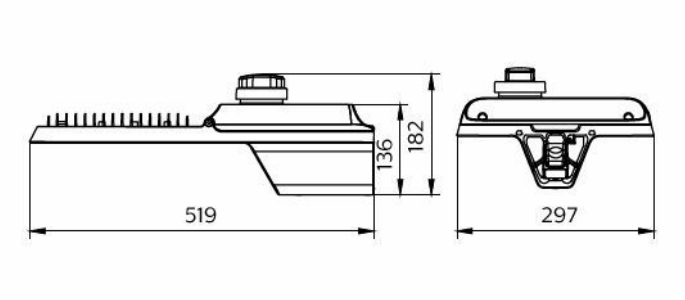

RoadFlair Gen2 BRP493

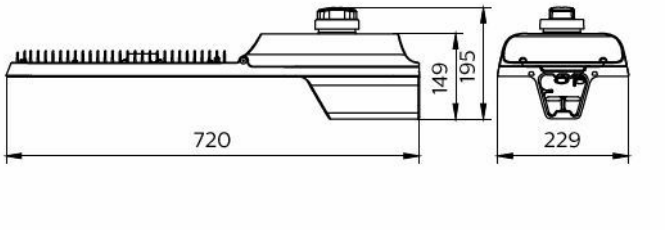

RoadFlair Gen2 - 43500 lm - 300 W - 4000 K

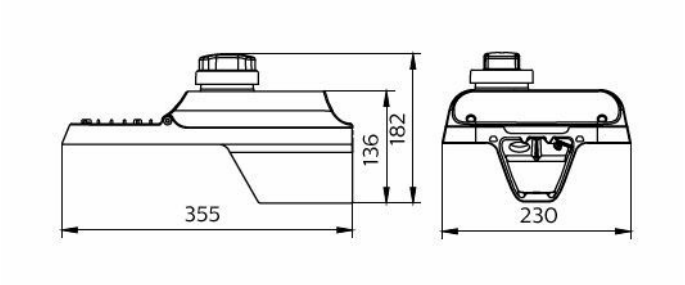

RoadFlair Gen2 BRP491

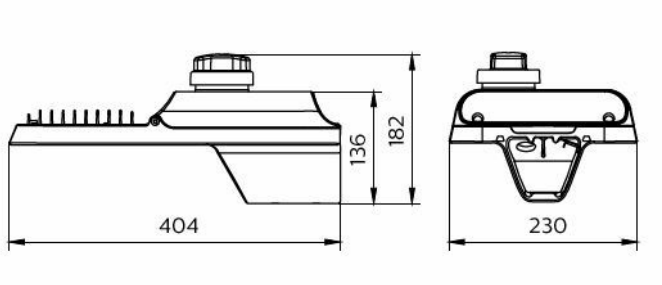

RoadFlair Gen2 - 21500 lm - 150 W - 4000 K

Product details



RoadFlair Gen2 BRP49X



RoadFlair Gen2 BRP49X



RoadFlair Gen2 BRP49X



RoadFlair Gen2 BRP49X



RoadFlair Gen2 BRP49X

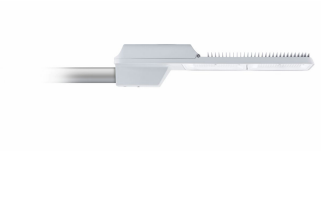

RoadFlair Gen2 BRP49X



RoadFlair Gen2 BRP49X



RoadFlair Gen2 BRP49X



RoadFlair Gen2 BRP49X



RoadFlair Gen2 BRP49X



RoadFlair Gen2 BRP49X

General Information

Driver included	Yes
Service tag	Yes

Light Technical

Color rendering index (CRI)	>70

Controls and Dimming

Dimmable	Yes

Mechanical and Housing

Housing Color	Aluminum and gray
Ingress protection code	IP66 [Dust penetration-protected, jet-proof]
Mech. impact protection code	IK08 [5 J vandal-protected]
Optical cover type	Polycarbonate micro lens optic

Approval and Application

CE mark	Yes

Light Technical

Order Code	Full Product Name	Luminous Flux	Correlated Color Temperature (Nom)	Light source color
911401673406	BRP492 LED215/NW 150W 220-240V DM GM	21,500 lm	4000 K	740 neutral white
911401673906	BRP492 LED215/NW 150W 220-240V DM P7 GM	21,500 lm	4000 K	740 neutral white
911401674706	BRP492 LED201/WW 150W 220-240V DM GM	20,100 lm	3000 K	730 warm white
911401673506	BRP493 LED285/NW 200W 220-240V DM GM	28,500 lm	4000 K	740 neutral white
911401673606	BRP493 LED362/NW 250W 220-240V DM GM	36,200 lm	4000 K	740 neutral white
911401674006	BRP493 LED285/NW 200W 220-240V DM P7 GM	28,500 lm	4000 K	740 neutral white
911401674106	BRP493 LED362/NW 250W 220-240V DM P7 GM	36,200 lm	4000 K	740 neutral white
911401674806	BRP493 LED268/WW 200W 220-240V DM GM	26,800 lm	3000 K	730 warm white
911401674906	BRP493 LED335/WW 250W 220-240V DM GM	33,500 lm	3000 K	730 warm white
911401673006	BRP491 LED102/NW 70W 220-240V DM GM	10,200 lm	4000 K	740 neutral white
911401673106	BRP491 LED115/NW 80W 220-240V DM GM	11,500 lm	4000 K	740 neutral white
911401673206	BRP491 LED130/NW 90W 220-240V DM GM	13,000 lm	4000 K	740 neutral white
911401673306	BRP491 LED142/NW 100W 220-240V DM GM	14,200 lm	4000 K	740 neutral white
911401673806	BRP491 LED142/NW 100W 220-240V DM P7 GM	14,200 lm	4000 K	740 neutral white
911401674306	BRP491 LED94/WW 70W 220-240V DM GM	9,400 lm	3000 K	730 warm white
911401674406	BRP491 LED107/WW 80W 220-240V DM GM	10,700 lm	3000 K	730 warm white
911401674606	BRP491 LED134/WW 100W 220-240V DM GM	13,400 lm	3000 K	730 warm white
911401673706	BRP494 LED435/NW 300W 220-240V DM GM	43,500 lm	4000 K	740 neutral white

Operating and Electrical

Order Code	Full Product Name	Power Consumption
911401673406	BRP492 LED215/NW 150W 220-240V DM GM	150 W
911401673906	BRP492 LED215/NW 150W 220-240V DM P7 GM	150 W
911401674706	BRP492 LED201/WW 150W 220-240V DM GM	150 W
911401673506	BRP493 LED285/NW 200W 220-240V DM GM	200 W
911401673606	BRP493 LED362/NW 250W 220-240V DM GM	250 W
911401674006	BRP493 LED285/NW 200W 220-240V DM P7 GM	200 W
911401674106	BRP493 LED362/NW 250W 220-240V DM P7 GM	250 W

Order Code	Full Product Name	Power Consumption
911401674806	BRP493 LED268/WW 200W 220-240V DM GM	200 W
911401674906	BRP493 LED335/WW 250W 220-240V DM GM	250 W
911401673006	BRP491 LED102/NW 70W 220-240V DM GM	70 W
911401673106	BRP491 LED115/NW 80W 220-240V DM GM	80 W
911401673206	BRP491 LED130/NW 90W 220-240V DM GM	90 W
911401673306	BRP491 LED142/NW 100W 220-240V DM GM	100 W
911401673806	BRP491 LED142/NW 100W 220-240V DM P7 GM	100 W
911401674306	BRP491 LED94/WW 70W 220-240V DM GM	70 W
911401674406	BRP491 LED107/WW 80W 220-240V DM GM	80 W
911401674606	BRP491 LED134/WW 100W 220-240V DM GM	100 W
911401673706	BRP494 LED435/NW 300W 220-240V DM GM	300 W

© 2026 Signify Holding. All rights reserved. The information provided herein is subject to change, without notice. Signify does not give any representation or warranty as to the accuracy or completeness of the information included herein and shall not be liable for any action in reliance thereon. The information presented in this document is not intended as any commercial offer and does not form part of any quotation or contract, unless otherwise agreed by Signify. Philips and the Philips Shield Emblem are registered trademarks of Koninklijke Philips N.V.