PHILIPS

Greenup Slim Downlight

DN150B



The ultra-thin downlight for general lighting applications with limited build-in height

Greenup Slim downlight is ultra-thin product for general lighting applications with limited build-in height, which is suitable for a series of Lighting applications in Office, Retail and General Area Lighting. Available in a wide variety of lumen packs, cut out size, color temp and dimming option (ETO approach).

Benefits

- Compact design for better integration with the building
- Comfortable light with high efficiency
- Reliable performance for indoor applications
- Connected lighting and future-proof smart technology

Applications

- Office Building
- Retail
- Hospitality

Features

- Lumen package: 600lm, 1000lm, 1500lm, 2100lm
- Cut out size: 3”, 5”, 6”, 8”
- CCT: 3000K / 4000K
- CRI: 80
- On/off (DALI, 1-10V ETO)
- Lifetime: 50,000hours L70 Ta 25°C

Versions



Greenup Slim downlight

Dimensional drawing

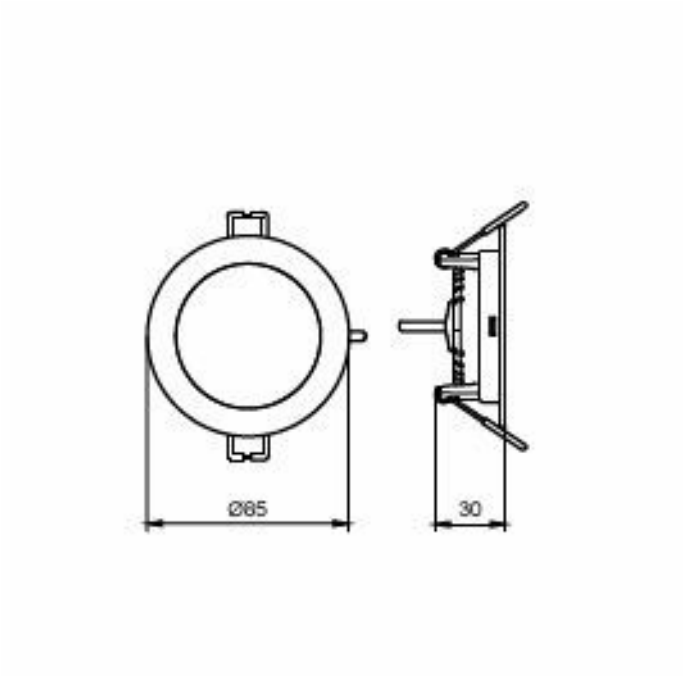

Greenup Slim downlight

General Information

Number of gear units	1 unit
Driver included	Yes
Service tag	Yes

Light Technical

Luminous Flux	650 lm
Correlated Color Temperature (Nom)	4000 K
Luminous Efficacy (rated) (Nom)	100 lm/W
Color rendering index (CRI)	>80
Beam angle of light source	- degree(s)
Optic type	-

Operating and Electrical

Input Voltage	220 to 240 V
Line Frequency	50 or 60 Hz
Power Consumption	6.5 W
Suitable for random switching	No
Protection class IEC	Safety class II

Controls and Dimming

Dimmable	No
Maximum dim level	Not applicable

Mechanical and Housing

Housing Color	White
Ingress protection code	IP20 [Finger-protected]
Mech. impact protection code	IK02 [0.2 J standard]
Optical cover type	Polycarbonate Diffuser

Approval and Application

Glow-wire test	Temperature 650 °C, duration 30 s
Flammability mark	-
CE mark	Yes
ENEC mark	-
Ambient temperature range	-20 to +40 °C

Initial Performance (IEC Compliant)

Luminous flux tolerance	+/-10%
Initial chromaticity	SDCM<5

Over Time Performance (IEC Compliant)

Driver failure rate at 5000 h	0.0015 %
Median useful life L80B50	35,000 hour(s)
Median useful life L90B50	16,000 hour(s)

© 2026 Signify Holding. All rights reserved. The information provided herein is subject to change, without notice. Signify does not give any representation or warranty as to the accuracy or completeness of the information included herein and shall not be liable for any action in reliance thereon. The information presented in this document is not intended as any commercial offer and does not form part of any quotation or contract, unless otherwise agreed by Signify. Philips and the Philips Shield Emblem are registered trademarks of Koninklijke Philips N.V.