PHILIPS

CityStar

CITYSTAR



Making every City 24x7

CityStar is a state-of-the-art LED luminaire at a surprisingly affordable price. Building on the strengths of best choice of LEDs and Electronics, this set of luminaire is designed to provide a cost-effective solution to those looking to reduce energy costs. CityStar offers all the advantages of LED lighting, without the high cost associated with this technology. The CityStar range is the perfect solution for replacing luminaires fitted with high-pressure sodium, metal halide and other HID lamps. Concept CityStar is composed of a high-pressure, die-cast aluminium body, universal fixation and a polycarbonate protector with integrated lenses. For optimized heat dissipation, the electronic components and the LED engine are in separate compartments. The body integrates cooling fins to maintain performance in the long term. Available in five different sizes CityStar is a very efficient LED lighting solution for streets, roads and any other outdoor environments where it is crucial to maximize energy savings.

Benefits

- Robust solution with best performance
- High optical clarity for a superior light transmission
- High Quality electronics ensures high level of reliability
- Universal pole mounting

Applications

- Road and Street
- Security Lighting
- Walkways

Features

- High pressure Aluminium Die cast
- IP66,IK07

- High and low Voltage Cut off,440V Protection for 8 hrs
- universal fixation adapted for side-entry (Ø32, Ø40, (for 20-45W) Ø48 or Ø60mm orØ76mm (for 90-150W)
- THD<10%, P.F>0.95
- Class I Protection

Versions



CityStar 35W



CityStar 120W



CityStar 30W SPD



CityStar 35W SPD



CityStar 20W SPD



CityStar 150W SPD



CityStar 45W SPD



CityStar 90W SPD

CityStar 20W



CityStar 40W



CityStar 120W SPD



CityStar 30W



CityStar 25W



CityStar 40W SPD



CityStar 150W



CityStar 25W SPD



CityStar 45W



Dimensional drawing

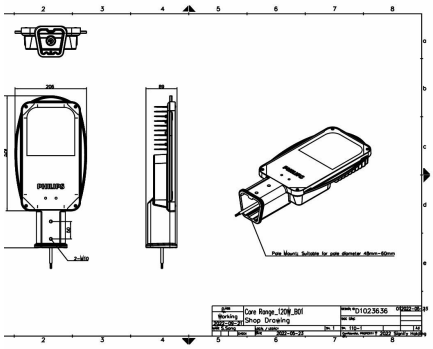

CityStar 120W

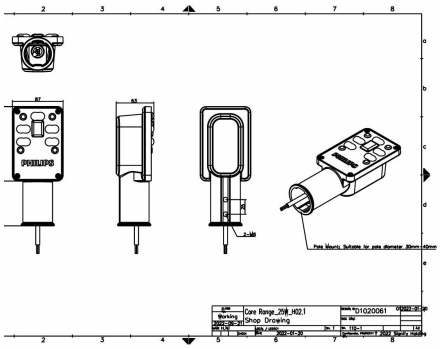

CityStar 20&25W

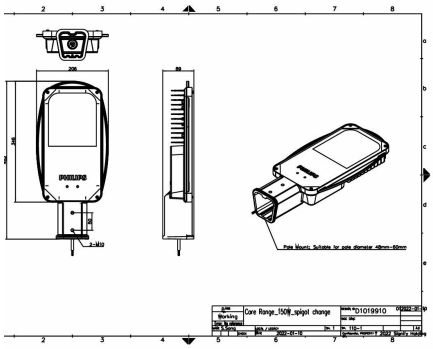

CityStar 150W

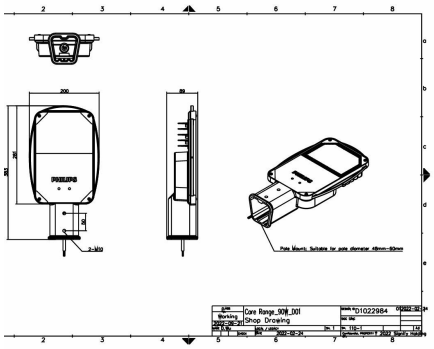

CityStar 90W

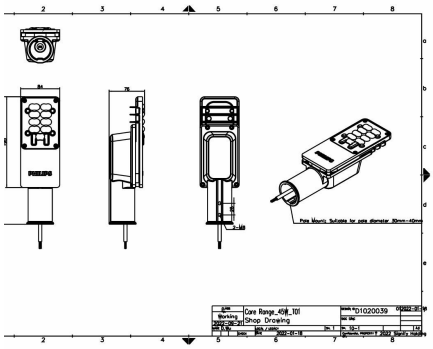

CityStar 30,35,40&45W

Product details

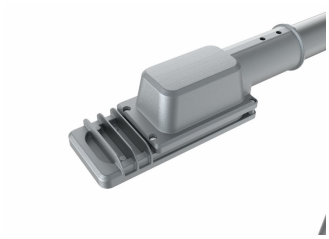

CityStar 45W



CityStar 150W



CityStar 120W



CityStar 25W

General Information

Driver included	Yes

Light Technical

Correlated Color Temperature (Nom)	5700 K
Luminous Efficacy (rated) (Nom)	120 lm/W
Color rendering index (CRI)	>70
Light source color	757 cool white
Luminaire light beam spread	130° x 88°
Optic type outdoor	Distribution Symmetric Wide

Operating and Electrical

Surge Protection (Common/Differential)	4/4 kV kV

Controls and Dimming

Dimmable	No

Mechanical and Housing

Housing Color	Aluminum and gray
Ingress protection code	IP66 [Dust penetration-protected, jet-proof]
Mech. impact protection code	IK07 [2 J reinforced]
Optical cover type	Polycarbonate

Approval and Application

Flammability mark	For mounting on normally flammable surfaces
Ambient temperature range	-10 to +50 °C

Light Technical

Order Code	Full Product Name	Luminous Flux
919515815527	BRP331 LED42 CW R5N PC PSU S1	4,200 lm
919515815625	BRP334 LED144 CW R5C FG PSU S1	14,400 lm
919515815532	BRP331 LED36 CW R5N PC PSU S1 SPD	3,600 lm
919515815533	BRP331 LED42 CW R5N PC PSU S1 SPD	4,200 lm
919515815530	BRP330 LED24 CW R5N PC PSU S1 SPD	2,400 lm
919515815629	BRP335 LED180 CW R5C FG PSU S1 SPD	18,000 lm
919515815535	BRP331 LED54 CW R5N PC PSU S1 SPD	5,400 lm
919515815627	BRP333 LED110 CW R5C FG PSU S1 SPD	11,000 lm
919515815524	BRP330 LED24 CW R5N PC PSU S1	2,400 lm
919515815528	BRP331 LED48 CW R5N PC PSU S1	4,800 lm
919515815628	BRP334 LED144 CW R5C FG PSU S1 SPD	14,400 lm
919515815526	BRP331 LED36 CW R5N PC PSU S1	3,600 lm
919515815525	BRP330 LED30 CW R5N PC PSU S1	3,000 lm
919515815534	BRP331 LED48 CW R5N PC PSU S1 SPD	4,800 lm
919515815626	BRP335 LED180 CW R5C FG PSU S1	18,000 lm
919515815531	BRP330 LED30 CW R5N PC PSU S1 SPD	3,000 lm
919515815529	BRP331 LED54 CW R5N PC PSU S1	5,400 lm

Operating and Electrical

Order Code	Full Product Name	Power Consumption
919515815527	BRP331 LED42 CW R5N PC PSU S1	35 W
919515815625	BRP334 LED144 CW R5C FG PSU S1	120 W
919515815532	BRP331 LED36 CW R5N PC PSU S1 SPD	30 W
919515815533	BRP331 LED42 CW R5N PC PSU S1 SPD	35 W
919515815530	BRP330 LED24 CW R5N PC PSU S1 SPD	20 W
919515815629	BRP335 LED180 CW R5C FG PSU S1 SPD	150 W
919515815535	BRP331 LED54 CW R5N PC PSU S1 SPD	45 W
919515815627	BRP333 LED110 CW R5C FG PSU S1 SPD	90 W
919515815524	BRP330 LED24 CW R5N PC PSU S1	20 W
919515815528	BRP331 LED48 CW R5N PC PSU S1	40 W
919515815628	BRP334 LED144 CW R5C FG PSU S1 SPD	120 W
919515815526	BRP331 LED36 CW R5N PC PSU S1	30 W
919515815525	BRP330 LED30 CW R5N PC PSU S1	25 W
919515815534	BRP331 LED48 CW R5N PC PSU S1 SPD	40 W
919515815626	BRP335 LED180 CW R5C FG PSU S1	150 W
919515815531	BRP330 LED30 CW R5N PC PSU S1 SPD	25 W
919515815529	BRP331 LED54 CW R5N PC PSU S1	45 W

© 2026 Signify Holding. All rights reserved. The information provided herein is subject to change, without notice. Signify does not give any representation or warranty as to the accuracy or completeness of the information included herein and shall not be liable for any action in reliance thereon. The information presented in this document is not intended as any commercial offer and does not form part of any quotation or contract, unless otherwise agreed by Signify. Philips and the Philips Shield Emblem are registered trademarks of Koninklijke Philips N.V.