PHILIPS

GreenPerform Batten G3 BN398C

BN398C



Reliable and flexible

GreenPerform batten BN398C is a cost competitive linear solution with good performance and multiple lumen output for retail and industry applications. It offers surface mount and suspension installations to cater for different mounting options. Its multiple optic designs accommodate different applications as well.

Benefits

- High system efficacy with better energy saving
- Multiple optics for different applications
- Connected for future proof

Applications

- Food & large retail
- Warehouse
- Factory
- Indoor pubic area

Features

- System efficiency up to 140lm/W
- Wide and batwing beams available to fit different lighting applications
- DALI and Interact are available for easy control

Versions



GreenPerform batten std photo

LED Lamps, LEDspotMV VLE D 3.5-25W, 4.3-50W PAR16 GU10



GreenPerform BN398



RTP-OF-BN398-PSU-HE



GreenPerform Batten G3

Dimensional drawing

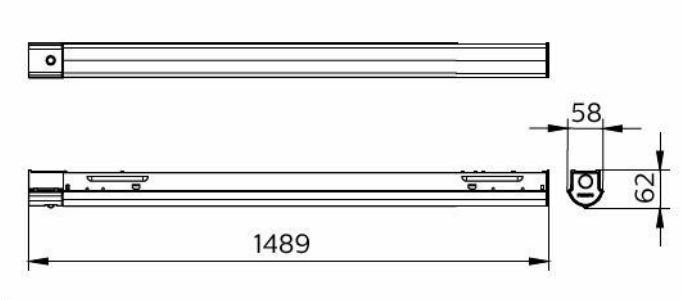

BN398C L1500 L1 S

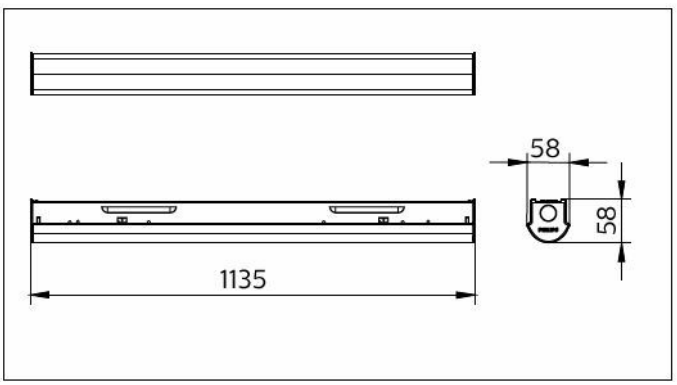

BN398X L1 W L1200

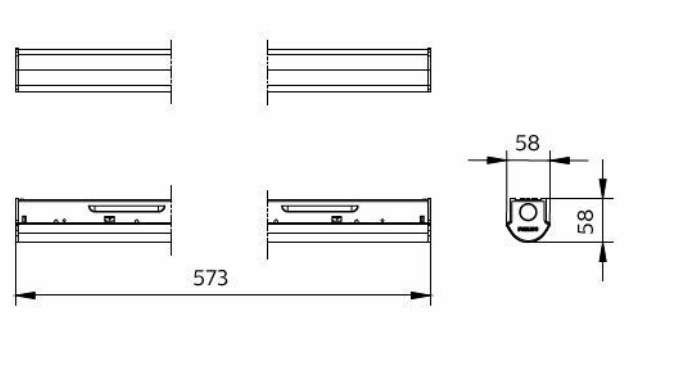

GreenPerform Batten G3

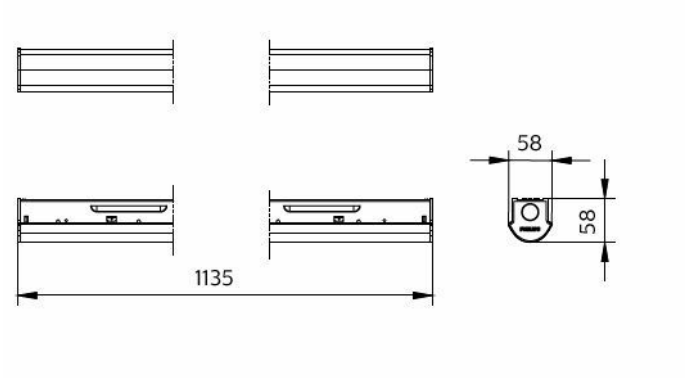

GreenPerform Batten G3

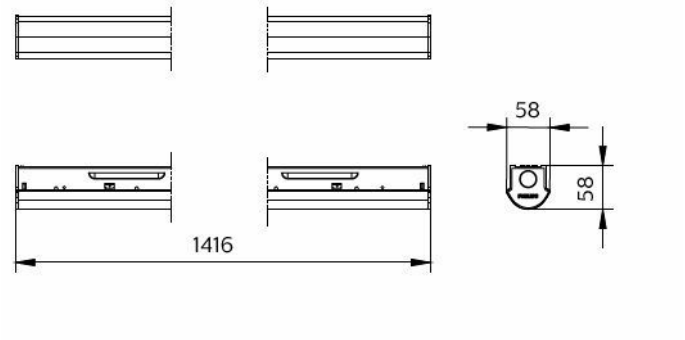

GreenPerform Batten G3

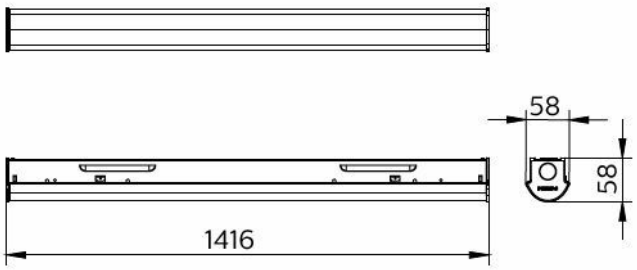

BN398X L1 W L1500

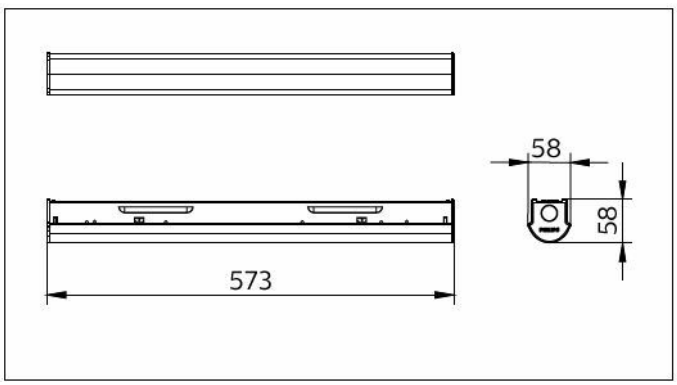

BN398X L1 W L600

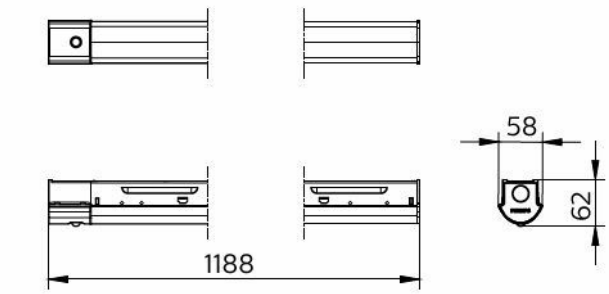

GreenPerform BN398 L1200

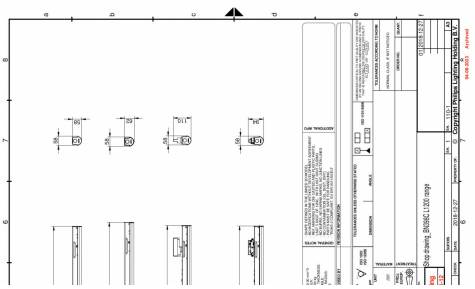

BN398C LED20/NW L1200 PSU OP HE

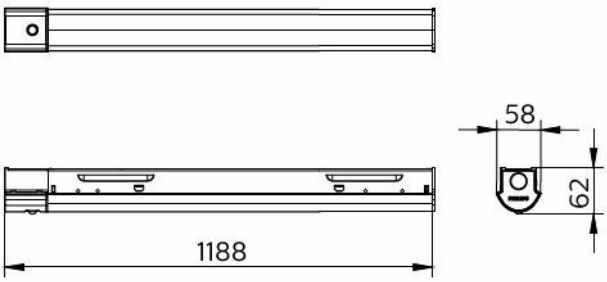

BN398C L1200 L1 S

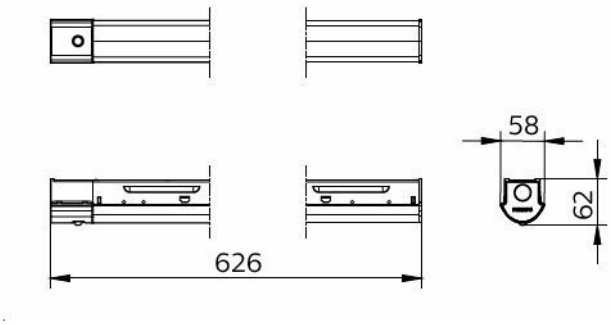

GreenPerform BN398 L600

General Information

Number of gear units	1 unit
Driver included	Yes

Light Technical

Optic type	Opal

Operating and Electrical

Input Voltage	220-240 V
Line Frequency	50 or 60 Hz
Protection class IEC	Safety class I

Mechanical and Housing

Ingress protection code	IP20 [Finger-protected]
Mech. impact protection code	IK03 [0.35 J reinforced]

Approval and Application

Glow-wire test	Temperature 650 °C, duration 30 s
CE mark	Yes
ENEC mark	-

General Information

Order Code	Full Product Name	Gear
911401549002	BN398X LED69/840 L1200 L1 S OP	-
911401549602	BN398X LED70/840 L1500 L1 S WB	-
911401549702	BN398X LED70/865 L1500 L1 S WB	-
911401549802	BN398X LED20/840 L600 L1 W OP	-
911401549902	BN398X LED20/865 L600 L1 W OP	-
911401550102	BN398X LED20/865 L600 L1 W WB	-
911401550202	BN398X LED40/840 L1200 L1 W OP	-
911401550302	BN398X LED40/865 L1200 L1 W OP	-
911401550602	BN398X LED69/840 L1200 L1 W OP	-
911401550802	BN398X LED70/840 L1500 L1 W OP	-
911401564591	BN398X LED20/840 L600 L1 S OP	-
911401564691	BN398X LED20/865 L600 L1 S OP	-
911401564791	BN398X LED20/840 L600 L1 S WB	-
911401564991	BN398X LED40/840 L1200 L1 S OP	-
911401565091	BN398X LED40/865 L1200 L1 S OP	-
911401565191	BN398X LED40/840 L1200 L1 S WB	-
911401565291	BN398X LED40/865 L1200 L1 S WB	-
911401521545	BN398C LED40/NW L1200 PSU OP HE	EBR
911401521645	BN398C LED40/CW L1200 PSU OP HE	EBR
911401521745	BN398C LED69/NW L1200 PSU OP HE	EBR
911401521845	BN398C LED69/CW L1200 PSU OP HE	EBR
911401521945	BN398C LED20/NW L1200 PSU OP HE	EBR
911401522045	BN398C LED20/CW L1200 PSU OP HE	EBR
911401522145	BN398C LED40/NW L1200 PSD OP HE	EBD
911401522245	BN398C LED40/CW L1200 PSD OP HE	EBD
911401522345	BN398C LED69/NW L1200 PSD OP HE	EBD
911401522445	BN398C LED69/CW L1200 PSD OP HE	EBD
911401501571	BN398C LED20/CW L1200 PSU OP	-
911401501671	BN398C LED20/NW L1200 PSU OP	-
911401582781	BN398X LED69/840 L1200 WIA OP	-
911401583251	BN398C LED20/NW L600 PSU OP	-
911401583351	BN398C LED20/CW L600 PSU OP	-
911401583451	BN398C LED40/NW L1200 PSU OP	-

Order Code	Full Product Name	Gear
911401583551	BN398C LED40/CW L1200 PSU OP	-
911401583651	BN398C LED69/NW L1200 PSU OP	-
911401583751	BN398C LED69/CW L1200 PSU OP	-
911401583851	BN398C LED87/NW L1500 PSU OP	-
911401583951	BN398C LED87/CW L1500 PSU OP	-
911401584051	BN398C LED20/NW L600 PSD OP	-
911401584251	BN398C LED40/NW L1200 PSD OP	-
911401584351	BN398C LED40/CW L1200 PSD OP	-
911401584451	BN398C LED69/NW L1200 PSD OP	-
911401584551	BN398C LED69/CW L1200 PSD OP	-
911401584651	BN398C LED87/NW L1500 PSD OP	-
911401584751	BN398C LED87/CW L1500 PSD OP	-
911401584951	BN398C LED20/CW L600 PSU DA	-
911401585151	BN398C LED40/CW L1200 PSU DA	-
911401585251	BN398C LED69/NW L1200 PSU DA	-
911401585351	BN398C LED69/CW L1200 PSU DA	-
911401585551	BN398C LED87/CW L1500 PSU DA	-
911401585651	BN398C LED20/NW L600 PSU WB	-
911401585751	BN398C LED20/CW L600 PSU WB	-
911401585851	BN398C LED40/NW L1200 PSU WB	-
911401585951	BN398C LED40/CW L1200 PSU WB	-
911401586051	BN398C LED69/NW L1200 PSU WB	-
911401586151	BN398C LED69/CW L1200 PSU WB	-
911401586251	BN398C LED87/NW L1500 PSU WB	-
911401586351	BN398C LED87/CW L1500 PSU WB	-
911401587851	BN398C LED40/NW L1200 PSU OP TC	-

Light Technical

Order Code	Full Product Name	Luminous Flux	Correlated Color Temperature (Nom)	Luminous Efficacy (rated) (Nom)	Color rendering index (CRI)	Number of light sources	Beam angle of light source
911401549002	BN398X LED69/840 L1200 L1 S OP	6,800 lm	4000 K	138.77551020408163 lm/W	≥80	4	- degree(s)
911401549602	BN398X LED70/840 L1500 L1 S WB	7,100 lm	4000 K	136.53846153846155 lm/W	≥80	5	- degree(s)
911401549702	BN398X LED70/865 L1500 L1 S WB	7,100 lm	6500 K	136.53846153846155 lm/W	≥80	5	- degree(s)
911401549802	BN398X LED20/840 L600 L1 W OP	2,200 lm	4000 K	146.66666666666666 lm/W	≥80	2	- degree(s)
911401549902	BN398X LED20/865 L600 L1 W OP	2,200 lm	6500 K	146.66666666666666 lm/W	≥80	2	- degree(s)
911401550102	BN398X LED20/865 L600 L1 W WB	2,000 lm	6500 K	148.14814814814815 lm/W	≥80	2	- degree(s)
911401550202	BN398X LED40/840 L1200 L1 W OP	3,700 lm	4000 K	142.30769230769232 lm/W	≥80	4	- degree(s)
911401550302	BN398X LED40/865 L1200 L1 W OP	3,700 lm	6500 K	142.30769230769232 lm/W	≥80	4	- degree(s)
911401550602	BN398X LED69/840 L1200 L1 W OP	6,800 lm	4000 K	138.77551020408163 lm/W	≥80	4	- degree(s)

Order Code	Full Product Name	Luminous Flux	Correlated Color Temperature (Nom)	Luminous Efficacy (rated) (Nom)	Color rendering index (CRI)	Number of light sources	Beam angle of light source
911401550802	BN398X LED70/840 L1500 L1 W OP	7,400 lm	4000 K	145.09803921568627 lm/W	≥80	5	- degree(s)
911401564591	BN398X LED20/840 L600 L1 S OP	2,200 lm	4000 K	146.66666666666666 lm/W	≥80	2	- degree(s)
911401564691	BN398X LED20/865 L600 L1 S OP	2,200 lm	6500 K	146.66666666666666 lm/W	≥80	2	- degree(s)
911401564791	BN398X LED20/840 L600 L1 S WB	2,000 lm	4000 K	148.14814814814815 lm/W	≥80	2	- degree(s)
911401564991	BN398X LED40/840 L1200 L1 S OP	3,700 lm	4000 K	142.30769230769232 lm/W	≥80	4	- degree(s)
911401565091	BN398X LED40/865 L1200 L1 S OP	3,700 lm	6500 K	142.30769230769232 lm/W	≥80	4	- degree(s)
911401565191	BN398X LED40/840 L1200 L1 S WB	3,800 lm	4000 K	146.15384615384616 lm/W	≥80	4	- degree(s)
911401565291	BN398X LED40/865 L1200 L1 S WB	3,800 lm	6500 K	146.15384615384616 lm/W	≥80	4	- degree(s)
911401521545	BN398C LED40/NW L1200 PSU OP HE	4,000 lm	4000 K	160 lm/W	>80	144	115 degree(s)
911401521645	BN398C LED40/CW L1200 PSU OP HE	4,000 lm	6500 K	160 lm/W	>80	144	115 degree(s)
911401521745	BN398C LED69/NW L1200 PSU OP HE	6,900 lm	4000 K	160 lm/W	>80	228	115 degree(s)
911401521845	BN398C LED69/CW L1200 PSU OP HE	6,900 lm	6500 K	160 lm/W	>80	228	115 degree(s)
911401521945	BN398C LED20/NW L1200 PSU OP HE	2,000 lm	4000 K	160 lm/W	>80	88	115 degree(s)
911401522045	BN398C LED20/CW L1200 PSU OP HE	2,000 lm	6500 K	160 lm/W	>80	88	115 degree(s)
911401522145	BN398C LED40/NW L1200 PSD OP HE	4,000 lm	4000 K	160 lm/W	>80	144	115 degree(s)
911401522245	BN398C LED40/CW L1200 PSD OP HE	4,000 lm	6500 K	160 lm/W	>80	144	115 degree(s)
911401522345	BN398C LED69/NW L1200 PSD OP HE	6,900 lm	4000 K	160 lm/W	>80	228	115 degree(s)
911401522445	BN398C LED69/CW L1200 PSD OP HE	6,900 lm	6500 K	160 lm/W	>80	228	115 degree(s)
911401501571	BN398C LED20/CW L1200 PSU OP	2,400 lm	6500 K	151 lm/W	>80	-	-
911401501671	BN398C LED20/NW L1200 PSU OP	2,400 lm	4000 K	151 lm/W	>80	-	-
911401582781	BN398X LED69/840 L1200 WIA OP	6,900 lm	4000 K	142 lm/W	>80	-	-
911401583251	BN398C LED20/NW L600 PSU OP	2,100 lm	4000 K	147 lm/W	>80	-	-
911401583351	BN398C LED20/CW L600 PSU OP	2,100 lm	6500 K	147 lm/W	>80	-	-
911401583451	BN398C LED40/NW L1200 PSU OP	4,100 lm	4000 K	141 lm/W	>80	-	-
911401583551	BN398C LED40/CW L1200 PSU OP	4,100 lm	6500 K	141 lm/W	>80	-	-
911401583651	BN398C LED69/NW L1200 PSU OP	6,900 lm	4000 K	140 lm/W	>80	-	-
911401583751	BN398C LED69/CW L1200 PSU OP	6,900 lm	6500 K	140 lm/W	>80	-	-
911401583851	BN398C LED87/NW L1500 PSU OP	8,600 lm	4000 K	140 lm/W	>80	-	-
911401583951	BN398C LED87/CW L1500 PSU OP	8,600 lm	6500 K	140 lm/W	>80	-	-
911401584051	BN398C LED20/NW L600 PSD OP	2,100 lm	4000 K	144 lm/W	>80	-	-
911401584251	BN398C LED40/NW L1200 PSD OP	4,100 lm	4000 K	136 lm/W	>80	-	-
911401584351	BN398C LED40/CW L1200 PSD OP	4,100 lm	6500 K	136 lm/W	>80	-	-
911401584451	BN398C LED69/NW L1200 PSD OP	6,800 lm	4000 K	138 lm/W	>80	-	-
911401584551	BN398C LED69/CW L1200 PSD OP	6,800 lm	6500 K	138 lm/W	>80	-	-

Order Code	Full Product Name	Luminous Flux	Correlated Color Temperature (Nom)	Luminous Efficacy (rated) (Nom)	Color rendering index (CRI)	Number of light sources	Beam angle of light source
911401584651	BN398C LED87/NW L1500 PSD OP	8,500 lm	4000 K	139 lm/W	>80	-	-
911401584751	BN398C LED87/CW L1500 PSD OP	8,500 lm	6500 K	139 lm/W	>80	-	-
911401584951	BN398C LED20/CW L600 PSU DA	2,000 lm	6500 K	129 lm/W	>80	-	-
911401585151	BN398C LED40/CW L1200 PSU DA	4,100 lm	6500 K	141 lm/W	>80	-	-
911401585251	BN398C LED69/NW L1200 PSU DA	6,800 lm	4000 K	123 lm/W	>80	-	-
911401585351	BN398C LED69/CW L1200 PSU DA	6,800 lm	6500 K	123 lm/W	>80	-	-
911401585551	BN398C LED87/CW L1500 PSU DA	8,500 lm	6500 K	125 lm/W	>80	-	-
911401585651	BN398C LED20/NW L600 PSU WB	2,000 lm	4000 K	129 lm/W	>80	-	-
911401585751	BN398C LED20/CW L600 PSU WB	2,000 lm	6500 K	129 lm/W	>80	-	-
911401585851	BN398C LED40/NW L1200 PSU WB	4,100 lm	4000 K	141 lm/W	>80	-	-
911401585951	BN398C LED40/CW L1200 PSU WB	4,100 lm	6500 K	141 lm/W	>80	-	-
911401586051	BN398C LED69/NW L1200 PSU WB	7,000 lm	4000 K	127 lm/W	>80	-	-
911401586151	BN398C LED69/CW L1200 PSU WB	7,000 lm	6500 K	127 lm/W	>80	-	-
911401586251	BN398C LED87/NW L1500 PSU WB	8,700 lm	4000 K	127 lm/W	>80	-	-
911401586351	BN398C LED87/CW L1500 PSU WB	8,700 lm	6500 K	127 lm/W	>80	-	-
911401587851	BN398C LED40/NW L1200 PSU OP TC	4,100 lm	4000 K	141 lm/W	>80	-	-

Operating and Electrical

Order Code	Full Product Name	Power Consumption	Suitable for random switching
911401549002	BN398X LED69/840 L1200 L1 S OP	49 W	Not applicable
911401549602	BN398X LED70/840 L1500 L1 S WB	52 W	Not applicable
911401549702	BN398X LED70/865 L1500 L1 S WB	52 W	Not applicable
911401549802	BN398X LED20/840 L600 L1 W OP	15 W	Not applicable
911401549902	BN398X LED20/865 L600 L1 W OP	15 W	Not applicable
911401550102	BN398X LED20/865 L600 L1 W WB	13.5 W	Not applicable
911401550202	BN398X LED40/840 L1200 L1 W OP	26 W	Not applicable
911401550302	BN398X LED40/865 L1200 L1 W OP	26 W	Not applicable
911401550602	BN398X LED69/840 L1200 L1 W OP	49 W	Not applicable
911401550802	BN398X LED70/840 L1500 L1 W OP	51 W	Not applicable
911401564591	BN398X LED20/840 L600 L1 S OP	16.5 W	Not applicable
911401564691	BN398X LED20/865 L600 L1 S OP	16.5 W	Not applicable
911401564791	BN398X LED20/840 L600 L1 S WB	14.85 W	Not applicable
911401564991	BN398X LED40/840 L1200 L1 S OP	28.6 W	Not applicable
911401565091	BN398X LED40/865 L1200 L1 S OP	28.6 W	Not applicable
911401565191	BN398X LED40/840 L1200 L1 S WB	26 W	Not applicable
911401565291	BN398X LED40/865 L1200 L1 S WB	26 W	Not applicable
911401521545	BN398C LED40/NW L1200 PSU OP HE	25 W	Yes
911401521645	BN398C LED40/CW L1200 PSU OP HE	25 W	Yes
911401521745	BN398C LED69/NW L1200 PSU OP HE	43 W	Yes
911401521845	BN398C LED69/CW L1200 PSU OP HE	43 W	Yes

Order Code	Full Product Name	Power Consumption	Suitable for random switching
911401521945	BN398C LED20/NW L1200 PSU OP HE	12.6 W	Yes
911401522045	BN398C LED20/CW L1200 PSU OP HE	12.6 W	Yes
911401522145	BN398C LED40/NW L1200 PSD OP HE	25 W	Yes
911401522245	BN398C LED40/CW L1200 PSD OP HE	25 W	Yes
911401522345	BN398C LED69/NW L1200 PSD OP HE	43 W	Yes
911401522445	BN398C LED69/CW L1200 PSD OP HE	43 W	Yes
911401501571	BN398C LED20/CW L1200 PSU OP	15.8 W	-
911401501671	BN398C LED20/NW L1200 PSU OP	15.8 W	-
911401582781	BN398X LED69/840 L1200 WIA OP	48.5 W	-
911401583251	BN398C LED20/NW L600 PSU OP	14.2 W	-
911401583351	BN398C LED20/CW L600 PSU OP	14.2 W	-
911401583451	BN398C LED40/NW L1200 PSU OP	29 W	-
911401583551	BN398C LED40/CW L1200 PSU OP	29 W	-
911401583651	BN398C LED69/NW L1200 PSU OP	49 W	-
911401583751	BN398C LED69/CW L1200 PSU OP	49 W	-
911401583851	BN398C LED87/NW L1500 PSU OP	61 W	-
911401583951	BN398C LED87/CW L1500 PSU OP	61 W	-
911401584051	BN398C LED20/NW L600 PSD OP	14.5 W	-
911401584251	BN398C LED40/NW L1200 PSD OP	30 W	-
911401584351	BN398C LED40/CW L1200 PSD OP	30 W	-
911401584451	BN398C LED69/NW L1200 PSD OP	49 W	-
911401584551	BN398C LED69/CW L1200 PSD OP	49 W	-
911401584651	BN398C LED87/NW L1500 PSD OP	61 W	-
911401584751	BN398C LED87/CW L1500 PSD OP	61 W	-
911401584951	BN398C LED20/CW L600 PSU DA	15.5 W	-
911401585151	BN398C LED40/CW L1200 PSU DA	29 W	-
911401585251	BN398C LED69/NW L1200 PSU DA	55 W	-
911401585351	BN398C LED69/CW L1200 PSU DA	55 W	-
911401585551	BN398C LED87/CW L1500 PSU DA	68 W	-
911401585651	BN398C LED20/NW L600 PSU WB	15.5 W	-
911401585751	BN398C LED20/CW L600 PSU WB	15.5 W	-
911401585851	BN398C LED40/NW L1200 PSU WB	29 W	-
911401585951	BN398C LED40/CW L1200 PSU WB	29 W	-
911401586051	BN398C LED69/NW L1200 PSU WB	55 W	-
911401586151	BN398C LED69/CW L1200 PSU WB	55 W	-
911401586251	BN398C LED87/NW L1500 PSU WB	68 W	-
911401586351	BN398C LED87/CW L1500 PSU WB	68 W	-
911401587851	BN398C LED40/NW L1200 PSU OP TC	29 W	-

Controls and Dimming

Order Code	Full Product Name	Dimmable	Maximum dim level
911401549002	BN398X LED69/840 L1200 L1 S OP	No	20%

Order Code	Full Product Name	Dimmable	Maximum dim level
911401549602	BN398X LED70/840 L1500 L1 S WB	No	20%
911401549702	BN398X LED70/865 L1500 L1 S WB	No	20%
911401549802	BN398X LED20/840 L600 L1 W OP	Wireless Dim	20%
911401549902	BN398X LED20/865 L600 L1 W OP	Wireless Dim	20%
911401550102	BN398X LED20/865 L600 L1 W WB	Wireless Dim	20%
911401550202	BN398X LED40/840 L1200 L1 W OP	Wireless Dim	20%
911401550302	BN398X LED40/865 L1200 L1 W OP	Wireless Dim	20%
911401550602	BN398X LED69/840 L1200 L1 W OP	Wireless Dim	20%
911401550802	BN398X LED70/840 L1500 L1 W OP	Wireless Dim	20%
911401564591	BN398X LED20/840 L600 L1 S OP	No	20%
911401564691	BN398X LED20/865 L600 L1 S OP	No	20%
911401564791	BN398X LED20/840 L600 L1 S WB	No	20%
911401564991	BN398X LED40/840 L1200 L1 S OP	No	20%
911401565091	BN398X LED40/865 L1200 L1 S OP	No	20%
911401565191	BN398X LED40/840 L1200 L1 S WB	No	20%
911401565291	BN398X LED40/865 L1200 L1 S WB	No	20%
911401521545	BN398C LED40/NW L1200 PSU OP HE	-	Not applicable
911401521645	BN398C LED40/CW L1200 PSU OP HE	-	Not applicable
911401521745	BN398C LED69/NW L1200 PSU OP HE	-	Not applicable
911401521845	BN398C LED69/CW L1200 PSU OP HE	-	Not applicable
911401521945	BN398C LED20/NW L1200 PSU OP HE	-	Not applicable
911401522045	BN398C LED20/CW L1200 PSU OP HE	-	Not applicable
911401522145	BN398C LED40/NW L1200 PSD OP HE	DALI	1%
911401522245	BN398C LED40/CW L1200 PSD OP HE	DALI	1%
911401522345	BN398C LED69/NW L1200 PSD OP HE	DALI	1%
911401522445	BN398C LED69/CW L1200 PSD OP HE	DALI	1%
911401501571	BN398C LED20/CW L1200 PSU OP	No	-
911401501671	BN398C LED20/NW L1200 PSU OP	No	-
911401582781	BN398X LED69/840 L1200 WIA OP	No	-
911401583251	BN398C LED20/NW L600 PSU OP	No	-
911401583351	BN398C LED20/CW L600 PSU OP	No	-
911401583451	BN398C LED40/NW L1200 PSU OP	No	-
911401583551	BN398C LED40/CW L1200 PSU OP	No	-
911401583651	BN398C LED69/NW L1200 PSU OP	No	-
911401583751	BN398C LED69/CW L1200 PSU OP	No	-
911401583851	BN398C LED87/NW L1500 PSU OP	No	-
911401583951	BN398C LED87/CW L1500 PSU OP	No	-
911401584051	BN398C LED20/NW L600 PSD OP	Yes	-
911401584251	BN398C LED40/NW L1200 PSD OP	Yes	-
911401584351	BN398C LED40/CW L1200 PSD OP	Yes	-
911401584451	BN398C LED69/NW L1200 PSD OP	Yes	-
911401584551	BN398C LED69/CW L1200 PSD OP	Yes	-

Order Code	Full Product Name	Dimmable	Maximum dim level
911401584651	BN398C LED87/NW L1500 PSD OP	Yes	-
911401584751	BN398C LED87/CW L1500 PSD OP	Yes	-
911401584951	BN398C LED20/CW L600 PSU DA	No	-
911401585151	BN398C LED40/CW L1200 PSU DA	No	-
911401585251	BN398C LED69/NW L1200 PSU DA	No	-
911401585351	BN398C LED69/CW L1200 PSU DA	No	-
911401585551	BN398C LED87/CW L1500 PSU DA	No	-
911401585651	BN398C LED20/NW L600 PSU WB	No	-
911401585751	BN398C LED20/CW L600 PSU WB	No	-
911401585851	BN398C LED40/NW L1200 PSU WB	No	-
911401585951	BN398C LED40/CW L1200 PSU WB	No	-
911401586051	BN398C LED69/NW L1200 PSU WB	No	-
911401586151	BN398C LED69/CW L1200 PSU WB	No	-
911401586251	BN398C LED87/NW L1500 PSU WB	No	-
911401586351	BN398C LED87/CW L1500 PSU WB	No	-
911401587851	BN398C LED40/NW L1200 PSU OP TC	No	-

Mechanical and Housing

Order Code	Full Product Name	Housing Color	Optical cover type
911401549002	BN398X LED69/840 L1200 L1 S OP	White	Without lens
911401549602	BN398X LED70/840 L1500 L1 S WB	White	Without lens
911401549702	BN398X LED70/865 L1500 L1 S WB	White	Without lens
911401549802	BN398X LED20/840 L600 L1 W OP	White	Without lens
911401549902	BN398X LED20/865 L600 L1 W OP	White	Without lens
911401550102	BN398X LED20/865 L600 L1 W WB	White	Without lens
911401550202	BN398X LED40/840 L1200 L1 W OP	White	Without lens
911401550302	BN398X LED40/865 L1200 L1 W OP	White	Without lens
911401550602	BN398X LED69/840 L1200 L1 W OP	White	Without lens
911401550802	BN398X LED70/840 L1500 L1 W OP	White	Without lens
911401564591	BN398X LED20/840 L600 L1 S OP	White	Without lens
911401564691	BN398X LED20/865 L600 L1 S OP	White	Without lens
911401564791	BN398X LED20/840 L600 L1 S WB	White	Without lens
911401564991	BN398X LED40/840 L1200 L1 S OP	White	Without lens
911401565091	BN398X LED40/865 L1200 L1 S OP	White	Without lens
911401565191	BN398X LED40/840 L1200 L1 S WB	White	Without lens
911401565291	BN398X LED40/865 L1200 L1 S WB	White	Without lens
911401521545	BN398C LED40/NW L1200 PSU OP HE	White RAL9010	Opal diffuser in polycarbonate cover
911401521645	BN398C LED40/CW L1200 PSU OP HE	White RAL9010	Opal diffuser in polycarbonate cover
911401521745	BN398C LED69/NW L1200 PSU OP HE	White RAL9010	Opal diffuser in polycarbonate cover
911401521845	BN398C LED69/CW L1200 PSU OP HE	White RAL9010	Opal diffuser in polycarbonate cover
911401521945	BN398C LED20/NW L1200 PSU OP HE	White RAL9010	Opal diffuser in polycarbonate cover
911401522045	BN398C LED20/CW L1200 PSU OP HE	White RAL9010	Opal diffuser in polycarbonate cover

Order Code	Full Product Name	Housing Color	Optical cover type
911401522145	BN398C LED40/NW L1200 PSD OP HE	White RAL9010	Opal diffuser in polycarbonate cover
911401522245	BN398C LED40/CW L1200 PSD OP HE	White RAL9010	Opal diffuser in polycarbonate cover
911401522345	BN398C LED69/NW L1200 PSD OP HE	White RAL9010	Opal diffuser in polycarbonate cover
911401522445	BN398C LED69/CW L1200 PSD OP HE	White RAL9010	Opal diffuser in polycarbonate cover
911401501571	BN398C LED20/CW L1200 PSU OP	White RAL 9003	Polymethyl methacrylate bowl/cover
911401501671	BN398C LED20/NW L1200 PSU OP	White RAL 9003	Polymethyl methacrylate bowl/cover
911401582781	BN398X LED69/840 L1200 WIA OP	White RAL 9003	Polymethyl methacrylate bowl/cover
911401583251	BN398C LED20/NW L600 PSU OP	White RAL 9003	Polymethyl methacrylate bowl/cover
911401583351	BN398C LED20/CW L600 PSU OP	White RAL 9003	Polymethyl methacrylate bowl/cover
911401583451	BN398C LED40/NW L1200 PSU OP	White RAL 9003	Polymethyl methacrylate bowl/cover
911401583551	BN398C LED40/CW L1200 PSU OP	White RAL 9003	Polymethyl methacrylate bowl/cover
911401583651	BN398C LED69/NW L1200 PSU OP	White RAL 9003	Polymethyl methacrylate bowl/cover
911401583751	BN398C LED69/CW L1200 PSU OP	White RAL 9003	Polymethyl methacrylate bowl/cover
911401583851	BN398C LED87/NW L1500 PSU OP	White RAL 9003	Polymethyl methacrylate bowl/cover
911401583951	BN398C LED87/CW L1500 PSU OP	White RAL 9003	Polymethyl methacrylate bowl/cover
911401584051	BN398C LED20/NW L600 PSD OP	White RAL 9003	Polymethyl methacrylate bowl/cover
911401584251	BN398C LED40/NW L1200 PSD OP	White RAL 9003	Polymethyl methacrylate bowl/cover
911401584351	BN398C LED40/CW L1200 PSD OP	White RAL 9003	Polymethyl methacrylate bowl/cover
911401584451	BN398C LED69/NW L1200 PSD OP	White RAL 9003	Polymethyl methacrylate bowl/cover
911401584551	BN398C LED69/CW L1200 PSD OP	White RAL 9003	Polymethyl methacrylate bowl/cover
911401584651	BN398C LED87/NW L1500 PSD OP	White RAL 9003	Polymethyl methacrylate bowl/cover
911401584751	BN398C LED87/CW L1500 PSD OP	White RAL 9003	Polymethyl methacrylate bowl/cover
911401584951	BN398C LED20/CW L600 PSU DA	White RAL 9003	Polymethyl methacrylate bowl/cover
911401585151	BN398C LED40/CW L1200 PSU DA	White RAL 9003	Polymethyl methacrylate bowl/cover
911401585251	BN398C LED69/NW L1200 PSU DA	White RAL 9003	Polymethyl methacrylate bowl/cover
911401585351	BN398C LED69/CW L1200 PSU DA	White RAL 9003	Polymethyl methacrylate bowl/cover
911401585551	BN398C LED87/CW L1500 PSU DA	White RAL 9003	Polymethyl methacrylate bowl/cover
911401585651	BN398C LED20/NW L600 PSU WB	White RAL 9003	Polymethyl methacrylate bowl/cover
911401585751	BN398C LED20/CW L600 PSU WB	White RAL 9003	Polymethyl methacrylate bowl/cover
911401585851	BN398C LED40/NW L1200 PSU WB	White RAL 9003	Polymethyl methacrylate bowl/cover
911401585951	BN398C LED40/CW L1200 PSU WB	White RAL 9003	Polymethyl methacrylate bowl/cover
911401586051	BN398C LED69/NW L1200 PSU WB	White RAL 9003	Polymethyl methacrylate bowl/cover
911401586151	BN398C LED69/CW L1200 PSU WB	White RAL 9003	Polymethyl methacrylate bowl/cover
911401586251	BN398C LED87/NW L1500 PSU WB	White RAL 9003	Polymethyl methacrylate bowl/cover
911401586351	BN398C LED87/CW L1500 PSU WB	White RAL 9003	Polymethyl methacrylate bowl/cover
911401587851	BN398C LED40/NW L1200 PSU OP TC	White RAL 9003	Polymethyl methacrylate bowl/cover

Approval and Application

Order Code	Full Product Name	Flammability mark	Ambient temperature range
911401549002	BN398X LED69/840 L1200 L1 S OP	-	0 to +30 °C
911401549602	BN398X LED70/840 L1500 L1 S WB	-	0 to +30 °C
911401549702	BN398X LED70/865 L1500 L1 S WB	-	0 to +30 °C

Order Code	Full Product Name	Flammability mark	Ambient temperature range
911401549802	BN398X LED20/840 L600 L1 W OP	-	-20 to +40 °C
911401549902	BN398X LED20/865 L600 L1 W OP	-	-20 to +40 °C
911401550102	BN398X LED20/865 L600 L1 W WB	-	-20 to +40 °C
911401550202	BN398X LED40/840 L1200 L1 W OP	-	-20 to +40 °C
911401550302	BN398X LED40/865 L1200 L1 W OP	-	-20 to +40 °C
911401550602	BN398X LED69/840 L1200 L1 W OP	-	-20 to +40 °C
911401550802	BN398X LED70/840 L1500 L1 W OP	-	-20 to +40 °C
911401564591	BN398X LED20/840 L600 L1 S OP	-	0 to +30 °C
911401564691	BN398X LED20/865 L600 L1 S OP	-	0 to +30 °C
911401564791	BN398X LED20/840 L600 L1 S WB	-	0 to +30 °C
911401564991	BN398X LED40/840 L1200 L1 S OP	-	0 to +30 °C
911401565091	BN398X LED40/865 L1200 L1 S OP	-	0 to +30 °C
911401565191	BN398X LED40/840 L1200 L1 S WB	-	0 to +30 °C
911401565291	BN398X LED40/865 L1200 L1 S WB	-	0 to +30 °C
911401521545	BN398C LED40/NW L1200 PSU OP HE	-	0 to +40 °C
911401521645	BN398C LED40/CW L1200 PSU OP HE	-	0 to +40 °C
911401521745	BN398C LED69/NW L1200 PSU OP HE	-	0 to +40 °C
911401521845	BN398C LED69/CW L1200 PSU OP HE	-	0 to +40 °C
911401521945	BN398C LED20/NW L1200 PSU OP HE	-	0 to +40 °C
911401522045	BN398C LED20/CW L1200 PSU OP HE	-	0 to +40 °C
911401522145	BN398C LED40/NW L1200 PSD OP HE	-	0 to +40 °C
911401522245	BN398C LED40/CW L1200 PSD OP HE	-	0 to +40 °C
911401522345	BN398C LED69/NW L1200 PSD OP HE	-	0 to +40 °C
911401522445	BN398C LED69/CW L1200 PSD OP HE	-	0 to +40 °C
911401501571	BN398C LED20/CW L1200 PSU OP	For mounting on normally flammable surfaces	-20 to +40 °C
911401501671	BN398C LED20/NW L1200 PSU OP	For mounting on normally flammable surfaces	-20 to +40 °C
911401582781	BN398X LED69/840 L1200 WIA OP	For mounting on normally flammable surfaces	-20 to +40 °C
911401583251	BN398C LED20/NW L600 PSU OP	For mounting on normally flammable surfaces	-20 to +40 °C
911401583351	BN398C LED20/CW L600 PSU OP	For mounting on normally flammable surfaces	-20 to +40 °C
911401583451	BN398C LED40/NW L1200 PSU OP	For mounting on normally flammable surfaces	-20 to +40 °C
911401583551	BN398C LED40/CW L1200 PSU OP	For mounting on normally flammable surfaces	-20 to +40 °C
911401583651	BN398C LED69/NW L1200 PSU OP	For mounting on normally flammable surfaces	-20 to +40 °C
911401583751	BN398C LED69/CW L1200 PSU OP	For mounting on normally flammable surfaces	-20 to +40 °C
911401583851	BN398C LED87/NW L1500 PSU OP	For mounting on normally flammable surfaces	-20 to +40 °C
911401583951	BN398C LED87/CW L1500 PSU OP	For mounting on normally flammable surfaces	-20 to +40 °C
911401584051	BN398C LED20/NW L600 PSD OP	For mounting on normally flammable surfaces	-20 to +40 °C
911401584251	BN398C LED40/NW L1200 PSD OP	For mounting on normally flammable surfaces	-20 to +40 °C
911401584351	BN398C LED40/CW L1200 PSD OP	For mounting on normally flammable surfaces	-20 to +40 °C
911401584451	BN398C LED69/NW L1200 PSD OP	For mounting on normally flammable surfaces	-20 to +40 °C
911401584551	BN398C LED69/CW L1200 PSD OP	For mounting on normally flammable surfaces	-20 to +40 °C
911401584651	BN398C LED87/NW L1500 PSD OP	For mounting on normally flammable surfaces	-20 to +40 °C
911401584751	BN398C LED87/CW L1500 PSD OP	For mounting on normally flammable surfaces	-20 to +40 °C

Order Code	Full Product Name	Flammability mark	Ambient temperature range
911401584951	BN398C LED20/CW L600 PSU DA	For mounting on normally flammable surfaces	-20 to +40 °C
911401585151	BN398C LED40/CW L1200 PSU DA	For mounting on normally flammable surfaces	-20 to +40 °C
911401585251	BN398C LED69/NW L1200 PSU DA	For mounting on normally flammable surfaces	-20 to +40 °C
911401585351	BN398C LED69/CW L1200 PSU DA	For mounting on normally flammable surfaces	-20 to +40 °C
911401585551	BN398C LED87/CW L1500 PSU DA	For mounting on normally flammable surfaces	-20 to +40 °C
911401585651	BN398C LED20/NW L600 PSU WB	For mounting on normally flammable surfaces	-20 to +40 °C
911401585751	BN398C LED20/CW L600 PSU WB	For mounting on normally flammable surfaces	-20 to +40 °C
911401585851	BN398C LED40/NW L1200 PSU WB	For mounting on normally flammable surfaces	-20 to +40 °C
911401585951	BN398C LED40/CW L1200 PSU WB	For mounting on normally flammable surfaces	-20 to +40 °C
911401586051	BN398C LED69/NW L1200 PSU WB	For mounting on normally flammable surfaces	-20 to +40 °C
911401586151	BN398C LED69/CW L1200 PSU WB	For mounting on normally flammable surfaces	-20 to +40 °C
911401586251	BN398C LED87/NW L1500 PSU WB	For mounting on normally flammable surfaces	-20 to +40 °C
911401586351	BN398C LED87/CW L1500 PSU WB	For mounting on normally flammable surfaces	-20 to +40 °C
911401587851	BN398C LED40/NW L1200 PSU OP TC	For mounting on normally flammable surfaces	-20 to +40 °C

Initial Performance (IEC Compliant)

Order Code	Full Product Name	Luminous flux tolerance	Initial chromaticity
911401549002	BN398X LED69/840 L1200 L1 S OP	+/-10%	SDCM<21
911401549602	BN398X LED70/840 L1500 L1 S WB	+/-10%	SDCM<30
911401549702	BN398X LED70/865 L1500 L1 S WB	+/-10%	SDCM<34
911401549802	BN398X LED20/840 L600 L1 W OP	+/-10%	SDCM<7
911401549902	BN398X LED20/865 L600 L1 W OP	+/-10%	SDCM<11
911401550102	BN398X LED20/865 L600 L1 W WB	+/-10%	SDCM<12
911401550202	BN398X LED40/840 L1200 L1 W OP	+/-10%	SDCM<15
911401550302	BN398X LED40/865 L1200 L1 W OP	+/-10%	SDCM<19
911401550602	BN398X LED69/840 L1200 L1 W OP	+/-10%	SDCM<23
911401550802	BN398X LED70/840 L1500 L1 W OP	+/-10%	SDCM<31
911401564591	BN398X LED20/840 L600 L1 S OP	+/-10%	SDCM<5
911401564691	BN398X LED20/865 L600 L1 S OP	+/-10%	SDCM<9
911401564791	BN398X LED20/840 L600 L1 S WB	+/-10%	SDCM<6
911401564991	BN398X LED40/840 L1200 L1 S OP	+/-10%	SDCM<13
911401565091	BN398X LED40/865 L1200 L1 S OP	+/-10%	SDCM<17
911401565191	BN398X LED40/840 L1200 L1 S WB	+/-10%	SDCM<14
911401565291	BN398X LED40/865 L1200 L1 S WB	+/-10%	SDCM<18
911401521545	BN398C LED40/NW L1200 PSU OP HE	-10% / +10%	(0.386,0.386) SDCM<5
911401521645	BN398C LED40/CW L1200 PSU OP HE	-10% / +10%	(0.317,0.334) SDCM<5
911401521745	BN398C LED69/NW L1200 PSU OP HE	-10% / +10%	(0.386,0.386) SDCM<5
911401521845	BN398C LED69/CW L1200 PSU OP HE	-10% / +10%	(0.317,0.334) SDCM<5
911401521945	BN398C LED20/NW L1200 PSU OP HE	-10% / +10%	(0.386,0.386) SDCM<5
911401522045	BN398C LED20/CW L1200 PSU OP HE	-10% / +10%	(0.317,0.334) SDCM<5
911401522145	BN398C LED40/NW L1200 PSD OP HE	-10% / +10%	(0.386,0.386) SDCM<5
911401522245	BN398C LED40/CW L1200 PSD OP HE	-10% / +10%	(0.317,0.334) SDCM<5

Order Code	Full Product Name	Luminous flux tolerance	Initial chromaticity
911401522345	BN398C LED69/NW L1200 PSD OP HE	-10% / +10%	(0.386,0.386) SDCM<5
911401522445	BN398C LED69/CW L1200 PSD OP HE	-10% / +10%	(0.317,0.334) SDCM<5
911401501571	BN398C LED20/CW L1200 PSU OP	+/-10%	SDCM<5
911401501671	BN398C LED20/NW L1200 PSU OP	+/-10%	SDCM<5
911401582781	BN398X LED69/840 L1200 WIA OP	+/-10%	SDCM<5
911401583251	BN398C LED20/NW L600 PSU OP	+/-10%	SDCM<5
911401583351	BN398C LED20/CW L600 PSU OP	+/-10%	SDCM<5
911401583451	BN398C LED40/NW L1200 PSU OP	+/-10%	SDCM<5
911401583551	BN398C LED40/CW L1200 PSU OP	+/-10%	SDCM<5
911401583651	BN398C LED69/NW L1200 PSU OP	+/-10%	SDCM<5
911401583751	BN398C LED69/CW L1200 PSU OP	+/-10%	SDCM<5
911401583851	BN398C LED87/NW L1500 PSU OP	+/-10%	SDCM<5
911401583951	BN398C LED87/CW L1500 PSU OP	+/-10%	SDCM<5
911401584051	BN398C LED20/NW L600 PSD OP	+/-10%	SDCM<5
911401584251	BN398C LED40/NW L1200 PSD OP	+/-10%	SDCM<5
911401584351	BN398C LED40/CW L1200 PSD OP	+/-10%	SDCM<5
911401584451	BN398C LED69/NW L1200 PSD OP	+/-10%	SDCM<5
911401584551	BN398C LED69/CW L1200 PSD OP	+/-10%	SDCM<5
911401584651	BN398C LED87/NW L1500 PSD OP	+/-10%	SDCM<5
911401584751	BN398C LED87/CW L1500 PSD OP	+/-10%	SDCM<5
911401584951	BN398C LED20/CW L600 PSU DA	+/-10%	SDCM<5
911401585151	BN398C LED40/CW L1200 PSU DA	+/-10%	SDCM<5
911401585251	BN398C LED69/NW L1200 PSU DA	+/-10%	SDCM<5
911401585351	BN398C LED69/CW L1200 PSU DA	+/-10%	SDCM<5
911401585551	BN398C LED87/CW L1500 PSU DA	+/-10%	SDCM<5
911401585651	BN398C LED20/NW L600 PSU WB	+/-10%	SDCM<5
911401585751	BN398C LED20/CW L600 PSU WB	+/-10%	SDCM<5
911401585851	BN398C LED40/NW L1200 PSU WB	+/-10%	SDCM<5
911401585951	BN398C LED40/CW L1200 PSU WB	+/-10%	SDCM<5
911401586051	BN398C LED69/NW L1200 PSU WB	+/-10%	SDCM<5
911401586151	BN398C LED69/CW L1200 PSU WB	+/-10%	SDCM<5
911401586251	BN398C LED87/NW L1500 PSU WB	+/-10%	SDCM<5
911401586351	BN398C LED87/CW L1500 PSU WB	+/-10%	SDCM<5
911401587851	BN398C LED40/NW L1200 PSU OP TC	+/-10%	SDCM<5

© 2026 Signify Holding. All rights reserved. The information provided herein is subject to change, without notice. Signify does not give any representation or warranty as to the accuracy or completeness of the information included herein and shall not be liable for any action in reliance thereon. The information presented in this document is not intended as any commercial offer and does not form part of any quotation or contract, unless otherwise agreed by Signify. Philips and the Philips Shield Emblem are registered trademarks of Koninklijke Philips N.V.