Signify

Lumistreet gen2 ECO

7392709



Performance within reach

LumiStreet gen2 Eco is available with 1 or 2 highly efficient light modules.A maximum performance is achieved by making the optics also the outer IP cover.The luminaire is ideally suited for both new build streets and areas, as well as renovation of existing installations.This affordable luminaire not only offers a clean and timeless design to blend in with the environment, but also brings high quality lighting solutions with significant energy and maintenance savings and a long operational life.

Benefits

- Easy to install in both post top and side entry application.
- Interesting total cost of ownership.
- Limited initial investment.
- Considerable reduction in energy usage and carbon footprint; further energy savings achievable when using CLO or stand-alone dimming such as Dynadim.
- Signify Service tag (unique QR identification) for maintenance, installation and spare part information.
- Optionally prepared for use of smart lighting. For example, by using an intelligent system such as Interact.

Applications

- Road and Street
- Residential
- Walkways
- Parks and Plazas

Features

- Dedicated LED luminaire in a compact and efficient design.
- One or 2 LED modules for lower or higher lumen packages, 3 optics for effective distribution.
- Wide choice of lumen packages, ranging from 800 up to 11.000 lumen.
- Long life expectancy of 100.000 operating hours.

- One flexible design to facilitate both post top and side entry application.
- Suitable for new installations or one-to-one replacement in existing installations.
- Vandal-resistant IK09 (IK 08 with Nema or SR socket), ingress protection IP66.
- Tilt regulation for side entry and post top application.

Versions



Lumistreet gen2 ECO

Dimensional drawing

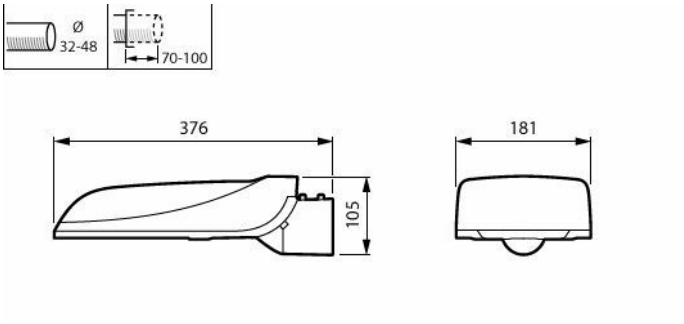

BGS010 LED74-1Z/730 DW DDF2 32/48S

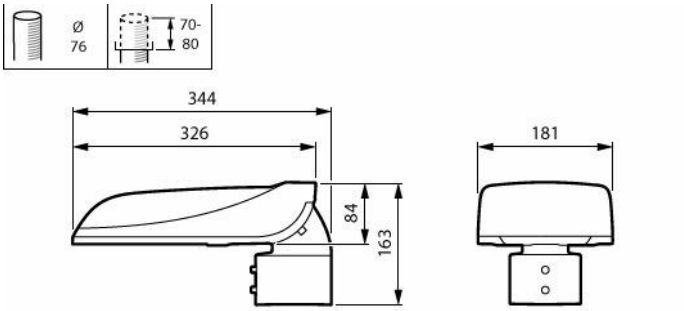

BGS010 LED27-1Z/730 DN SRG10 D9 76P

General Information

Light source replaceable	Yes
Number of gear units	1 unit
Driver included	Yes

Light Technical

Upward light output ratio	0
Correlated Color Temperature (Nom)	3000 K
Color rendering index (CRI)	70
Light source color	730 warm white
Luminaire light beam spread	160° - 42° x 54°

Mechanical and Housing

Housing Color	Grey
Ingress protection code	IP66 [Dust penetration-protected, jet-proof]
Mech. impact protection code	IK09 [10 J]
Standard tilt angle posttop	0°
Standard tilt angle side entry	0°
Optical cover type	-

Approval and Application

Flammability mark	-
CE mark	Yes

Product Data

Product family code	BGS010 [LUMISTREET GEN2 ECO]

General Information

Order Code	Full Product Name	Lamp family code
910925870920	BGS010 LED74-1Z/730 DW DDF2 32/48S	LED74
910925870921	BGS010 LED27-1Z/730 DN SRG10 D9 76P	LED27

Light Technical

Order Code	Full Product Name	Luminous Flux	Optic type outdoor
910925870920	BGS010 LED74-1Z/730 DW DDF2 32/48S	6,586 lm	Distribution wide
910925870921	BGS010 LED27-1Z/730 DN SRG10 D9 76P	2,430 lm	Distribution narrow

Operating and Electrical

Order Code	Full Product Name	Power Consumption	Surge Protection (Common/Differential)
910925870920	BGS010 LED74-1Z/730 DW DDF2 32/48S	42 W	-
910925870921	BGS010 LED27-1Z/730 DN SRG10 D9 76P	17 W	Surge protection level until 10 kV differential mode and 10 kV common mode

Controls and Dimming

Order Code	Full Product Name	Dimmable
910925870920	BGS010 LED74-1Z/730 DW DDF2 32/48S	Yes
910925870921	BGS010 LED27-1Z/730 DN SRG10 D9 76P	No

© 2026 Signify Holding. All rights reserved. The information provided herein is subject to change, without notice. Signify does not give any representation or warranty as to the accuracy or completeness of the information included herein and shall not be liable for any action in reliance thereon. The information presented in this document is not intended as any commercial offer and does not form part of any quotation or contract, unless otherwise agreed by Signify. All trademarks are owned by Signify Holding or their respective owners.