PHILIPS

**DN145B LED10S/830_840 PSD WH**

911401894687



Multi ColorTemp

# CoreLine SlimDownlight, All-in, 10 W, D155 mm, 1080 lm, 1150 lm, 3000 K, 4000 K, DALI, Textured, IP20/44, EL-ready

D155 mm, Aluminum die-cast, White, Signal white (RAL9003), Recessed, Power supply unit with DALI interface, All-in, Multi Color Temperature, 1080 lm, 1150 lm, 10 W, 115 lm/W, 108 lm/W, 3000 K, 4000 K, (0.43,0.40) SDCM<3; (0.38,0.38) SDCM<3, Beam angle 90°, Symmetrical, Textured, Polycarbonate, IP20(IP44 front), IK03 | 0.3 J, Safety class II, Push-in connector 8-pole, Self-contained emergency lighting is possible when used with a compatible battery kit accessory

## General Information

| | |
|---|---|
| Number of gear units | 1 unit |
| Driver included | Yes |
| Sustainability rating | Unclassified |
| Service tag | Yes |
| Mounting | Recessed |
| Value ladder | Performance |
| Warranty period | 5 years |

## Light Technical

| | |
|---|---|
| Luminous Flux | 1,080 lm |
| Correlated Color Temperature (Nom) | 3000 K |
| Luminous Efficacy (rated) (Nom) | 115 lm/W |
| Color rendering index (CRI) | >80 |
| Light source color | Multi Color Temperature |
| Optic type | Beam angle 90° |
| Luminaire light beam spread | 90° |
| Unified glare rating CEN | 28 |
| All-in Type | All-in, Multi Color Temperature |

## Operating and Electrical

| | |
|---|---|
| Input Voltage | 220 to 240 V |
| Line Frequency | 50 or 60 Hz |
| Inrush current | 16.5 A |
| Inrush time | 0.177 ms |
| Power Consumption | 10 W |
| Power Factor (Fraction) | 0.9 |
| Connection | Push-in connector 8-pole |
| Cable | - |
| Number of products on MCB of 16 A type B | 36 |
| Suitable for random switching | Yes |
| Protection class IEC | Safety class II |

## Controls and Dimming

| | |
|---|---|
| Dimmable | Yes |
| Driver/power unit/transformer | Power supply unit with DALI interface |
| Control interface | DALI |
| Constant light output | No |
| DALI Standard | DALI-2™ |

## Mechanical and Housing

| | |
|---|---|
| Housing Material | Aluminum die-cast |
| Reflector material | Polycarbonate |
| Optic material | Polymethyl methacrylate |
| Optical cover material | Polycarbonate |
| Fixation material | - |
| Housing Color | White |
| Optical cover finish | Textured |
| Overall length | 170 mm |
| Overall height | 30 mm |
| Overall diameter | 170 mm |
| Nominal Ceiling cut-out diameter | 155 mm |
| Ingress protection code | IP20(IP44 front) |
| Mech. impact protection code | IK03 [0.3 J] |
| Mounting | Recessed |
| Net Weight (Piece) | 0.420 kg |

## Emergency Operation

| | |
|---|---|
| Central Emergency | No |
| Emergency lighting | Self-contained emergency lighting is possible when used with a compatible battery kit accessory |

## Approval and Application

| | |
|---|---|
| Glow-wire test | Temperature 650 °C, duration 30 s |
| Flammability mark | For mounting on normally flammable surfaces |
| CE mark | Yes |
| ENEC mark | ENEC mark |
| EU RoHS compliant | Yes |
| Performance ambient temperature Tq | 25 °C |
| Flickering value (PstLM) - Flickering value as per EN 61000-3-3 | 1 |
| Stroboscopic effect visibility measure (SVM) | 0.4 |
| Ambient temperature range | -20 to +40 °C |

## Initial Performance (IEC Compliant)

| | |
|---|---|
| Luminous flux tolerance | -10% / +10% |
| Initial chromaticity | (0.43,0.40) SDCM<3; (0.38,0.38) SDCM<3 |
| Power consumption tolerance | +/-10% |

## Over Time Performance (IEC Compliant)

| | |
|---|---|
| Control gear failure rate at median useful life 50000 h | 5 % |
| Lumen maintenance (EN-IEC 62722-2-1) at median useful life* 50000 h | L80 |

## Sustainability Data

| | |
|---|---|
| Repair class | Repair Class D, this product is not designed to be repaired. |
| Non-virgin material ratio of the packaging | Cardboard > 80% recycled |
| Packaging Recyclable content ratio | Cardboard recycling rate > 80% |
| Packaging Material | Cardboard |

## Dimensional drawing

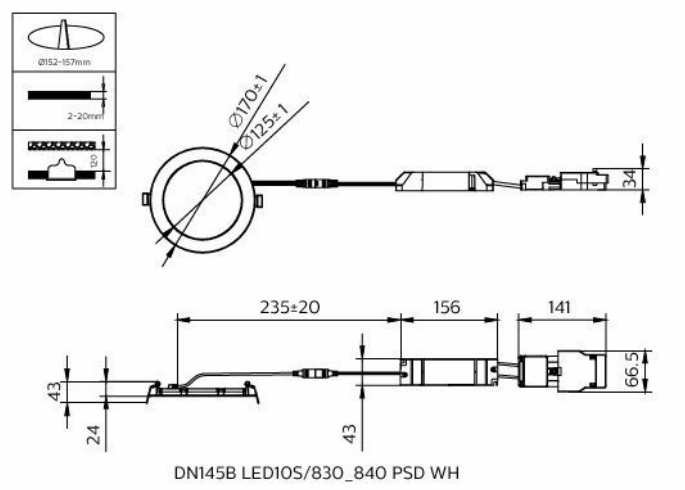


DN145B LED10S/830_840 PSD WH

## Polar normal diagrams

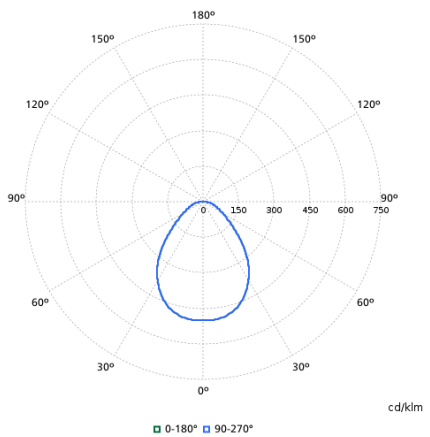


## Product Data

| | |
|---|---|
| Order product name | DN145B LED10S/830_840 PSD WH |
| Full product name | DN145B LED10S/830_840 PSD WH |
| Full product code | 872110331699899 |
| Order code | 911401894687 |
| Material Nr. (12NC) | 911401894687 |
| Numerator - Quantity Per Pack | 1 |
| EAN/UPC - Product/Case | 8721103316998 |
| Numerator - Packs per outer box | 24 |
| EAN/UPC - Case | 8721103317148 |

## Compatible Accesories

| Accessory Image | Accessory Code | Accessory Name | Website |
|---|---|---|---|
|  | 911401895087 | DN145Z SM Frame D150 | Product Website |
|  | 912401483602 | EM300V ELB_ELP3 kit LV 3.6V 4800mAh LIB | Product Website |

## Related Documents

| Documents and certificates | Document Name | Download |
|---|---|---|
| Installation Instructions | Coreline-slim-downlight-Dn145B-INI-260716.pdf | Download |

| Photometry and lighting design | Document Name | Download |
|---|---|---|
| IES File | dn145b-led10s-830-840-psd-wh-911401894687.ies | Download |
| LDT File | dn145b-led10s-830-840-psd-wh-911401894687.ldt | Download |
| ROLF File | dn145b-led10s-830-840-psd-wh-911401894687.rolfz | Download |
| ULD File | dn145b-led10s-830-840-psd-wh-911401894687.uld | Download |
| Revit file | dn145b-led10s-830-840-psd-wh-911401894687.zip | Download |

© 2026 Signify Holding. All rights reserved. The information provided herein is subject to change, without notice. Signify does not give any representation or warranty as to the accuracy or completeness of the information included herein and shall not be liable for any action in reliance thereon. The information presented in this document is not intended as any commercial offer and does not form part of any quotation or contract, unless otherwise agreed by Signify. Philips and the Philips Shield Emblem are registered trademarks of Koninklijke Philips N.V.