PHILIPS

BY030P
LED150_220_280S/
840_50_65 PSU WB
911401822687



Multi ColorTemp

Multi Lumen

Ledinaire High-bay, All-in, 195 W, 100 W, ϕ320 mm, 15000 lm, 22000 lm, 28000 lm, 4000 K, 5000 K, 6500 K, Symmetrical, IP65, IK07

ϕ320 mm, Aluminum die-cast, Aluminum and black, Jet black (RAL9005), Single layer powder coating, Suspended, Power supply unit (On/Off), All-in, Multi Lumen, All-in, Multi Color Temperature, 15000 lm, 22000 lm, 28000 lm, 195 W, 100 W, 152 lm/W, 142 lm/W, 4000 K, 5000 K, 6500 K, (0.38, 0.38); (0.31, 0.34) SDCM≤5, Symmetrical, Clear, Polycarbonate, IP65 | Dust penetration-protected, jet-proof, IK07 | 2 J reinforced, Safety class I, Screw connector

General Information

Number of gear units	1 unit
Driver included	Yes
Sustainability rating	Unclassified
Service tag	No
Value ladder	Value
Warranty period	5 years

Light Technical

Luminous Flux	15,000 lm
Saturated Red (R9)	<50
Correlated Color Temperature (Nom)	4000 K
Luminous Efficacy (rated) (Nom)	152 lm/W
Color rendering index (CRI)	>80
Light source color	Multi Color Temperature
Optic type	Symmetrical
Luminaire light beam spread	90°

Unified glare rating CEN	31
All-in Type	All-in, Multi Lumen

Operating and Electrical

Input Voltage	220 to 240 V
Line Frequency	50 or 60 Hz
Inrush current	68 A
Inrush time	0.213 ms
Power Consumption	195 W
Power Factor (Fraction)	0.9
Connection	Screw connector
Cable	Cable 0.3 m with connector 3-pole
Number of products on MCB of 16 A type B	9
Suitable for random switching	Yes
Protection class IEC	Safety class I
Total harmonic distortion	20 %

Controls and Dimming

Dimmable	No
Driver/power unit/transformer	Power supply unit (On/Off)
Control interface	-
Constant light output	No
Embedded control	-
Photocell	-

Mechanical and Housing

Housing Material	Aluminum die-cast
Reflector material	Polycarbonate
Optic material	Polycarbonate
Optical cover material	Polycarbonate
Fixation material	-
Housing Color	Aluminum and black
Optical cover finish	Clear
Reflector Finish	-
Overall height	119 mm
Overall diameter	320 mm
Ingress protection code	IP65 [Dust penetration-protected, jet-proof]
Mech. impact protection code	IK07 [2 J reinforced]
Mounting	Suspended
Net Weight (Piece)	2.460 kg

Emergency Operation

Central Emergency	No

Approval and Application

Glow-wire test	Temperature 650 °C, duration 30 s
Flammability mark	For mounting on normally flammable surfaces
CE mark	Yes
ENEC mark	-
Photobiological risk	Photobiological risk group 1 @200mm to EN62778
EU RoHS compliant	Yes
Performance ambient temperature Tq	25 °C
Flickering value (PstLM) - Flickering value as per EN 61000-3-3	1
Stroboscopic effect visibility measure (SVM)	0.9
Ambient temperature range	-30 to +50 °C

Initial Performance (IEC Compliant)

Luminous flux tolerance	-10% / +10%
Initial chromaticity	(0.38, 0.38); (0.31, 0.34) SDCM≤5
Power consumption tolerance	+/-10%
Standard Deviation of Colour Matching (McAdam ellipse)	SDCM≤5

Over Time Performance (IEC Compliant)

Control gear failure rate at median useful life 50000 h	7.5 %
Control gear failure rate at median useful life 75000 h	15 %
Lumen maintenance (EN-IEC 62722-2-1) at median useful life* 50000 h	L80
Lumen maintenance (EN-IEC 62722-2-1) at median useful life* 75000 h	L65

Sustainability Data

Repair class	Repair Class D, this product is not designed to be repaired.
Embedded carbon (A1-A3)	26.2 kg CO_2e
Product non-virgin material ratio	39.1 %
Recyclable content ratio of the finished product	39.5 %
GWP total B6 (kg CO2eq) Declared Unit	Please calculate using your local energy mix value: Power Declared Unit (kW) * Service life (hrs) Declared Unit * Energy mix (kg CO2eq / kwh)
GWP total B6 (kg CO2eq) Functional Unit	Please calculate using your local energy mix value: Power Declared Unit (kW) * 1000 (lm) /lumen output (lm) Declared Unit * 35000 (hrs) * Energy mix (kg CO2 eq / kwh)
Non-virgin material ratio of the packaging	Cardboard > 80% recycled
Packaging Recyclable content ratio	Cardboard recycling rate > 80%
Packaging Material	Cardboard

Product Data

Order product name	BY030P LED150_220_280S/ 840_50_65 PSU WB
Full product name	BY030P LED150_220_280S/ 840_50_65 PSU WB
Full product code	872016975897100
Order code	911401822687
Material Nr. (12NC)	911401822687
Numerator - Quantity Per Pack	1
EAN/UPC - Product/Case	8720169758971
Numerator - Packs per outer box	1
EAN/UPC - Case	8720169758971

Dimensional drawing

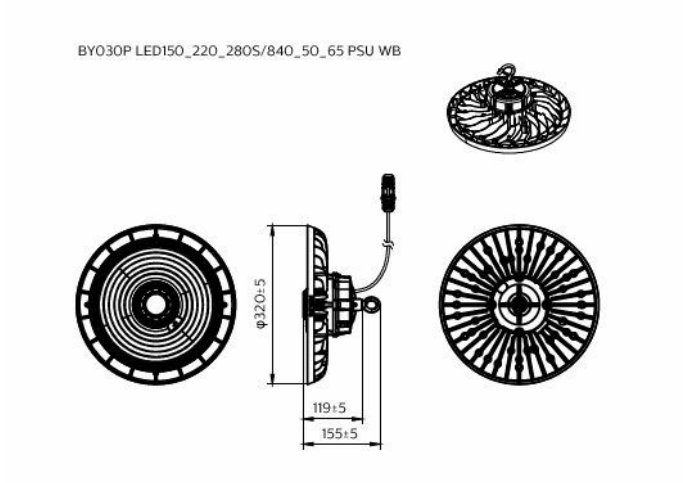

Compatible Accesories

Accessory Image	Accessory Code	Accessory Name	Website
	911401812987	Highbay Reflector AL-L_Z	Product Website
	911401813087	Highbay MB_Z	Product Website
	911401813187	LSCS Highbay Sensor_Z	Product Website
	911401813287	LSCS Highbay Remote Control_Z	Product Website

Related Documents

Documents and certificates	Document Name	Download
Environmental Product Declaration	EPD-HUB-EPD-Ledinaire-High-bay-BY030P-Ref-911401822687.pdf	Download
Installation Instructions	Ledinaire-Highbay-BY030P-All-In-MI.pdf	Download

Photometry and lighting design	Document Name	Download
LDT File	Ledinaire-Highbay-BY030P-1x150-220-280S-220S-4000K-PSU-WB.ldt	Download
IES File	Ledinaire-Highbay-BY030P-All-In-100W.ies	Download

© 2026 Signify Holding. All rights reserved. The information provided herein is subject to change, without notice. Signify does not give any representation or warranty as to the accuracy or completeness of the information included herein and shall not be liable for any action in reliance thereon. The information presented in this document is not intended as any commercial offer and does not form part of any quotation or contract, unless otherwise agreed by Signify. Philips and the Philips Shield Emblem are registered trademarks of Koninklijke Philips N.V.