Signify

Iridium gen4

BGP501



Iridium gen4 – Leading the way in road lighting comfort and convenience

Iridium gen4, the fourth generation of the Iridium family, is completely redesigned and fully optimized for visual comfort and tool-less maintenance. The Iridium gen4 provides guidance through the clear curved bowl placed in each luminaire along the road. Optional is the offer with GentleBeam. This is a textured curved glass, which reduces glare and improves visual comfort, while maintaining a good lighting distribution. The luminaire holds a new plug and play GearFlex module. This ensures a simplified maintenance and spare part repair process. The complete redesigned luminaire has a tool less opening, similar to Luma gen2, containing all electrical components in an easy to handle and accessible box inside the housing. Besides, the cable feed-through has been redesigned and access to the gear components is easy thanks to top down tool-less access. Iridium gen4 offers all connectivity and dimming options available today. As System Ready luminaire, it can be paired with lighting management systems such as Interact City or existing and upcoming sensor innovations. Also, installation has become easier and faster, and thanks to Service tag, you have access to all relevant documentations onsite. As a company conscious about the impact of light on the environment and biodiversity, the Iridium gen4 is equipped

with dedicated light recipes that help with maintaining the optimal ecosystems for bats or preserve a dark night sky. Iridium gen4 is a luminaire rated as best in class regarding efficiency and light performance, compared to other luminaires in the range, in a broad range of applications.

Benefits

- Ease of maintenance and fast repair enablement with tool les opening and GearFlex module. With Service tag immediate spare part identification.
- Road lighting guidance with clear bowl and supporting visual comfort with GentleBeam
- System ready with SR socket to connect with Interact City lighting management software and third party lighting management systems and sensors

Applications

- Motorways, inter-urban main roads, boulevards and avenues, roundabouts, pedestrian crossings
- Residential streets, side streets, squares, parks, cycle and pedestrian paths, playgrounds
- Parking areas, industrial areas, petrol stations, rail yards, airports, harbors, waterways

Features

- New curved bowls for guidance lighting or visual comfort
- High impact resistance, IK10
- Equipped with dedicated light recipes that help 1) maintaining the optimal ecosystems for bats 2) preserve a dark night sky and reduce light pollution
- Efficacy up to 155 lm/W
- Choice of 40+ different beams and option of different internal louvers

Versions



BGP502 Iridium gen4 Medium FG n



BGP502 Iridium gen4 Mini FG n

Dimensional drawing

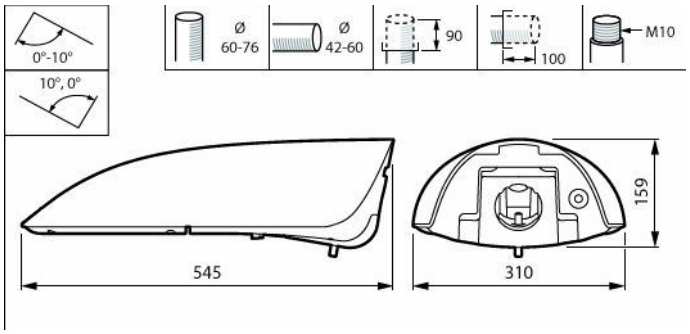

Iridium gen4 Mini - LED module, system flux 4500 lm - LED - Electronic regulating DALI - 16° x 47°

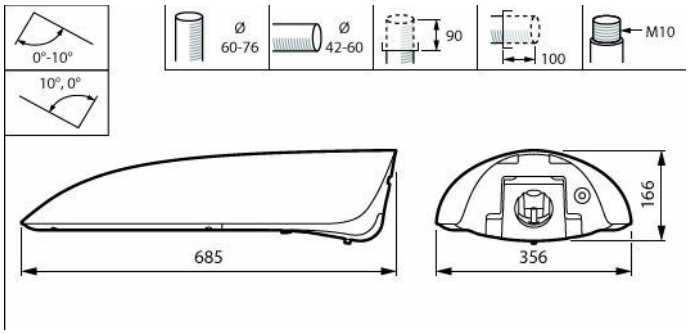

Iridium gen4 Medium - LED module, system flux 18000 lm - LED - Electronic regulating DALI - 45° x 54°

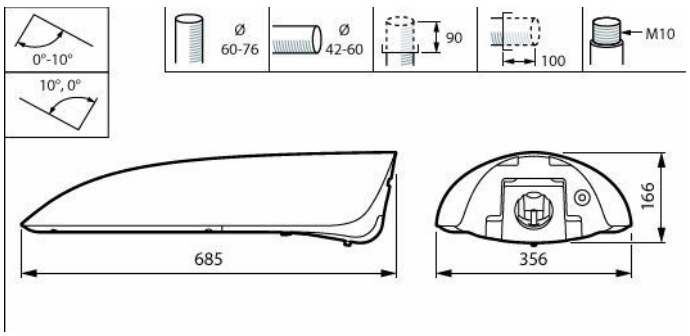

Iridium gen4 Medium dimensions

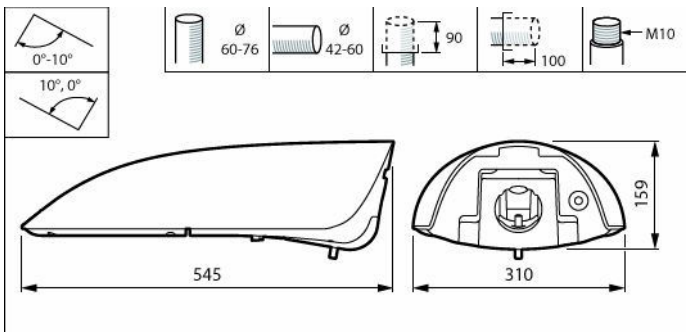

BGP501 LED18-4S/830 II DM10 PCC TXT GF

Product details



BGP501 Iridium gen4 Mini Open2



BGP501 Iridium gen4 Mini Cable1



BGP502 Iridium gen4 Medium Open2



BGP502 Iridium gen4 Medium Open2



BGP501 Iridium gen4 Mini Open2

General Information

Light source replaceable	Yes
Number of gear units	1 unit
Gear	EBD [Electronic regulating DALI]
Driver included	Yes
Service tag	Yes

Light Technical

Upward light output ratio	0

Operating and Electrical

Surge Protection (Common/ Differential)	Surge protection level until 6 kV differential mode and 6 kV common mode

Controls and Dimming

Maximum dim level	Not applicable

Mechanical and Housing

Ingress protection code	IP66 [Dust penetration-protected, jet-proof]
Mech. impact protection code	IK10 [20 J vandal-resistant]
Standard tilt angle posttop	0°
Standard tilt angle side entry	0°

Approval and Application

Flammability mark	For mounting on normally flammable surfaces
CE mark	Yes

Over Time Performance (IEC Compliant)

Driver failure rate at 5000 h	0.5 %

General Information

Order Code	Full Product Name	Lamp family code
910925866569	BGP502 LED110-4S/740 II DW10 FG GF SRTB	LED110-4S
910925866570	BGP502 LED100-4S/740 DM11 FG GF SRTB SP	LED100-4S
910925866571	BGP502 LED120-4S/830 DW10 BL1 FG GF SRTB	LED120-4S
910925867299	BGP502 LED75-4S/740 II GF DM32 MSP CLO	LED75-4S
910925867316	BGP502 LED45-4S/740 II GF DM31 GR MSP CO	LED45-4S
910925867317	BGP502 LED45-4S/830 II GF DM31 GR MSP CO	LED45-4S
910925867319	BGP502 LED80-4S/740 II GF DM11 GR CO CLO	LED80-4S
910925867321	BGP502 LED130-4S/740 II GF DM11 GR CO CL	LED130-4S
910925867323	BGP502 LED180-4S/740 II GF DM11 GR CO CL	LED180-4S
910925866554	BGP501 LED10-4S/740 DM11 FG GF SRTB SP	LED10-4S
910925866555	BGP501 LED20-4S/740 DM11 FG GF SRTB S05Z	LED20-4S
910925866556	BGP501 LED27-4S/740 II DW10 FG GF SRTB S	LED27-4S
910925866557	BGP501 LED45-4S/740 II DW10 FG GF SRTB S	LED45-4S
910925866559	BGP501 LED10-4S/830 DW10 BL1 FG GF SRTB	LED10-4S
910925866565	BGP501 LED18-4S/830 II DM10 PCC TXT GF	LED18-4S
910925867298	BGP501 LED45-4S/740 II GF DM32 MSP CLO	LED45-4S
910925867301	BGP501 LED16-4S/740 II GF DM11 GR CO CLO	LED16-4S
910925867304	BGP501 LED24-4S/740 II GF DM10 GR MSP CO	LED24-4S
910925867305	BGP501 LED24-4S/830 II GF DM10 GR MSP CO	LED24-4S
910925867306	BGP501 LED35-4S/740 II GF DM11 GR CO CLO	LED35-4S
910925867308	BGP501 LED40-4S/740 II GF DM11 GR CO CLO	LED40-4S
910925867310	BGP501 LED45-4S/740 II GF DM11 GR CO CLO	LED45-4S
910925867311	BGP501 LED45-4S/740 II GF DM11 GR CO CLO	LED45-4S
910925867312	BGP501 LED55-4S/740 II GF DM11 GR CO CLO	LED55-4S
910925867313	BGP501 LED50-4S/830 II GF DM11 GR CO CLO	LED50-4S
910925867314	BGP501 LED65-4S/740 II GF DM11 GR CO CLO	LED65-4S

Light Technical

Order Code	Full Product Name	Luminous Flux	Correlated Color Temperature (Nom)	Color rendering index (CRI)	Light source color	Luminaire light beam spread	Optic type outdoor
910925866569	BGP502 LED110-4S/740 II DW10 FG GF SRTB	9,570 lm	4000 K	70	740 neutral white	34° x 62°	Distribution wide 10
910925866570	BGP502 LED100-4S/740 DM11 FG GF SRTB SP	8,600 lm	4000 K	70	740 neutral white	45° x 54°	Distribution medium 11
910925866571	BGP502 LED120-4S/830 DW10 BL1 FG GF SRTB	9,890 lm	3000 K	80	830 warm white	13° x 60°	Distribution wide 10

Order Code	Full Product Name	Luminous Flux	Correlated Color Temperature (Nom)	Color rendering index (CRI)	Light source color	Luminaire light beam spread	Optic type outdoor
910925867299	BGP502 LED75-4S/740 II GF DM32 MSP CLO	5,950 lm	4000 K	70	740 neutral white	16° x 47°	Distribution medium 32
910925867316	BGP502 LED45-4S/740 II GF DM31 GR MSP CO	3,828 lm	4000 K	70	740 neutral white	30° x 60°	Distribution medium 31
910925867317	BGP502 LED45-4S/830 II GF DM31 GR MSP CO	3,698 lm	3000 K	80	830 warm white	30° x 60°	Distribution medium 31
910925867319	BGP502 LED80-4S/740 II GF DM11 GR CO CLO	6,612 lm	4000 K	70	740 neutral white	45° x 54°	Distribution medium 11
910925867321	BGP502 LED130-4S/740 II GF DM11 GR CO CL	10,625 lm	4000 K	70	740 neutral white	45° x 54°	Distribution medium 11
910925867323	BGP502 LED180-4S/740 II GF DM11 GR CO CL	13,940 lm	4000 K	70	740 neutral white	45° x 54°	Distribution medium 11
910925866554	BGP501 LED10-4S/740 DM11 FG GF SRTB SP	900 lm	4000 K	70	740 neutral white	45° x 54°	Distribution medium 11
910925866555	BGP501 LED20-4S/740 DM11 FG GF SRTB S05Z	1,780 lm	4000 K	70	740 neutral white	45° x 54°	Distribution medium 11
910925866556	BGP501 LED27-4S/740 II DW10 FG GF SRTB S	2,430 lm	4000 K	70	740 neutral white	34° x 62°	Distribution wide 10
910925866557	BGP501 LED45-4S/740 II DW10 FG GF SRTB S	3,960 lm	4000 K	70	740 neutral white	34° x 62°	Distribution wide 10
910925866559	BGP501 LED10-4S/830 DW10 BL1 FG GF SRTB	910 lm	3000 K	80	830 warm white	13° x 60°	Distribution wide 10
910925866565	BGP501 LED18-4S/830 II DM10 PCC TXT GF	1,584 lm	3000 K	80	830 warm white	38° x 56°	Distribution medium 10
910925867298	BGP501 LED45-4S/740 II GF DM32 MSP CLO	3,698 lm	4000 K	70	740 neutral white	16° x 47°	Distribution medium 32
910925867301	BGP501 LED16-4S/740 II GF DM11 GR CO CLO	1,395 lm	4000 K	70	740 neutral white	45° x 54°	Distribution medium 11
910925867304	BGP501 LED24-4S/740 II GF DM10 GR MSP CO	2,136 lm	4000 K	70	740 neutral white	38° x 56°	Distribution medium 10
910925867305	BGP501 LED24-4S/830 II GF DM10 GR MSP CO	2,160 lm	3000 K	80	830 warm white	38° x 56°	Distribution medium 10
910925867306	BGP501 LED35-4S/740 II GF DM11 GR CO CLO	3,026 lm	4000 K	70	740 neutral white	45° x 54°	Distribution medium 11
910925867308	BGP501 LED40-4S/740 II GF DM11 GR CO CLO	3,471 lm	4000 K	70	740 neutral white	45° x 54°	Distribution medium 11
910925867310	BGP501 LED45-4S/740 II GF DM11 GR CO CLO	3,784 lm	4000 K	70	740 neutral white	45° x 54°	Distribution medium 11
910925867311	BGP501 LED45-4S/740 II GF DM11 GR CO CLO	3,784 lm	4000 K	70	740 neutral white	45° x 54°	Distribution medium 11
910925867312	BGP501 LED55-4S/740 II GF DM11 GR CO CLO	4,524 lm	4000 K	70	740 neutral white	45° x 54°	Distribution medium 11
910925867313	BGP501 LED50-4S/830 II GF DM11 GR CO CLO	4,042 lm	3000 K	80	830 warm white	45° x 54°	Distribution medium 11
910925867314	BGP501 LED65-4S/740 II GF DM11 GR CO CLO	5,332 lm	4000 K	70	740 neutral white	45° x 54°	Distribution medium 11

Operating and Electrical

Order Code	Full Product Name	Power Consumption
910925866569	BGP502 LED110-4S/740 II DW10 FG GF SRTB	63 W
910925866570	BGP502 LED100-4S/740 DM11 FG GF SRTB SP	57 W
910925866571	BGP502 LED120-4S/830 DW10 BL1 FG GF SRTB	79 W
910925867299	BGP502 LED75-4S/740 II GF DM32 MSP CLO	51 W
910925867316	BGP502 LED45-4S/740 II GF DM31 GR MSP CO	28 W
910925867317	BGP502 LED45-4S/830 II GF DM31 GR MSP CO	36 W
910925867319	BGP502 LED80-4S/740 II GF DM11 GR CO CLO	46 W
910925867321	BGP502 LED130-4S/740 II GF DM11 GR CO CL	75 W
910925867323	BGP502 LED180-4S/740 II GF DM11 GR CO CL	106 W
910925866554	BGP501 LED10-4S/740 DM11 FG GF SRTB SP	7.3 W
910925866555	BGP501 LED20-4S/740 DM11 FG GF SRTB S05Z	13.2 W
910925866556	BGP501 LED27-4S/740 II DW10 FG GF SRTB S	16.8 W
910925866557	BGP501 LED45-4S/740 II DW10 FG GF SRTB S	27.5 W
910925866559	BGP501 LED10-4S/830 DW10 BL1 FG GF SRTB	8.9 W
910925866565	BGP501 LED18-4S/830 II DM10 PCC TXT GF	14.8 W
910925867298	BGP501 LED45-4S/740 II GF DM32 MSP CLO	26.5 W
910925867301	BGP501 LED16-4S/740 II GF DM11 GR CO CLO	10.6 W
910925867304	BGP501 LED24-4S/740 II GF DM10 GR MSP CO	15 W
910925867305	BGP501 LED24-4S/830 II GF DM10 GR MSP CO	17 W
910925867306	BGP501 LED35-4S/740 II GF DM11 GR CO CLO	21 W
910925867308	BGP501 LED40-4S/740 II GF DM11 GR CO CLO	24 W
910925867310	BGP501 LED45-4S/740 II GF DM11 GR CO CLO	26.5 W
910925867311	BGP501 LED45-4S/740 II GF DM11 GR CO CLO	26.5 W
910925867312	BGP501 LED55-4S/740 II GF DM11 GR CO CLO	32.5 W
910925867313	BGP501 LED50-4S/830 II GF DM11 GR CO CLO	37.5 W
910925867314	BGP501 LED65-4S/740 II GF DM11 GR CO CLO	39.5 W

Controls and Dimming

Order Code	Full Product Name	Dimmable
910925866569	BGP502 LED110-4S/740 II DW10 FG GF SRTB	No
910925866570	BGP502 LED100-4S/740 DM11 FG GF SRTB SP	No
910925866571	BGP502 LED120-4S/830 DW10 BL1 FG GF SRTB	No
910925867299	BGP502 LED75-4S/740 II GF DM32 MSP CLO	Yes
910925867316	BGP502 LED45-4S/740 II GF DM31 GR MSP CO	Yes
910925867317	BGP502 LED45-4S/830 II GF DM31 GR MSP CO	Yes
910925867319	BGP502 LED80-4S/740 II GF DM11 GR CO CLO	Yes
910925867321	BGP502 LED130-4S/740 II GF DM11 GR CO CL	Yes
910925867323	BGP502 LED180-4S/740 II GF DM11 GR CO CL	Yes

Order Code	Full Product Name	Dimmable
910925866554	BGP501 LED10-4S/740 DM11 FG GF SRTB SP	No
910925866555	BGP501 LED20-4S/740 DM11 FG GF SRTB S05Z	No
910925866556	BGP501 LED27-4S/740 II DW10 FG GF SRTB S	No
910925866557	BGP501 LED45-4S/740 II DW10 FG GF SRTB S	No
910925866559	BGP501 LED10-4S/830 DW10 BL1 FG GF SRTB	No
910925866565	BGP501 LED18-4S/830 II DM10 PCC TXT GF	Yes
910925867298	BGP501 LED45-4S/740 II GF DM32 MSP CLO	Yes
910925867301	BGP501 LED16-4S/740 II GF DM11 GR CO CLO	Yes
910925867304	BGP501 LED24-4S/740 II GF DM10 GR MSP CO	Yes
910925867305	BGP501 LED24-4S/830 II GF DM10 GR MSP CO	Yes
910925867306	BGP501 LED35-4S/740 II GF DM11 GR CO CLO	Yes
910925867308	BGP501 LED40-4S/740 II GF DM11 GR CO CLO	Yes
910925867310	BGP501 LED45-4S/740 II GF DM11 GR CO CLO	Yes
910925867311	BGP501 LED45-4S/740 II GF DM11 GR CO CLO	Yes
910925867312	BGP501 LED55-4S/740 II GF DM11 GR CO CLO	Yes
910925867313	BGP501 LED50-4S/830 II GF DM11 GR CO CLO	Yes
910925867314	BGP501 LED65-4S/740 II GF DM11 GR CO CLO	Yes

Mechanical and Housing

Order Code	Full Product Name	Housing Color	Optical cover type
910925866569	BGP502 LED110-4S/740 II DW10 FG GF SRTB	Gray	Glass
910925866570	BGP502 LED100-4S/740 DM11 FG GF SRTB SP	Gray	Glass
910925866571	BGP502 LED120-4S/830 DW10 BL1 FG GF SRTB	Gray	Glass
910925867299	BGP502 LED75-4S/740 II GF DM32 MSP CLO	Grey	Glass
910925867316	BGP502 LED45-4S/740 II GF DM31 GR MSP CO	Gray	Glass
910925867317	BGP502 LED45-4S/830 II GF DM31 GR MSP CO	Gray	Glass
910925867319	BGP502 LED80-4S/740 II GF DM11 GR CO CLO	Gray	Glass
910925867321	BGP502 LED130-4S/740 II GF DM11 GR CO CL	Gray	Glass
910925867323	BGP502 LED180-4S/740 II GF DM11 GR CO CL	Gray	Glass
910925866554	BGP501 LED10-4S/740 DM11 FG GF SRTB SP	Gray	Glass
910925866555	BGP501 LED20-4S/740 DM11 FG GF SRTB S05Z	Gray	Glass
910925866556	BGP501 LED27-4S/740 II DW10 FG GF SRTB S	Gray	Glass
910925866557	BGP501 LED45-4S/740 II DW10 FG GF SRTB S	Gray	Glass
910925866559	BGP501 LED10-4S/830 DW10 BL1 FG GF SRTB	Gray	Glass
910925866565	BGP501 LED18-4S/830 II DM10 PCC TXT GF	Gray	Polycarbonate
910925867298	BGP501 LED45-4S/740 II GF DM32 MSP CLO	Gray	Glass
910925867301	BGP501 LED16-4S/740 II GF DM11 GR CO CLO	Gray	Glass
910925867304	BGP501 LED24-4S/740 II GF DM10 GR MSP CO	Gray	Glass
910925867305	BGP501 LED24-4S/830 II GF DM10 GR MSP CO	Gray	Glass

Order Code	Full Product Name	Housing Color	Optical cover type
910925867306	BGP501 LED35-4S/740 II GF DM11 GR CO CLO	Gray	Glass
910925867308	BGP501 LED40-4S/740 II GF DM11 GR CO CLO	Gray	Glass
910925867310	BGP501 LED45-4S/740 II GF DM11 GR CO CLO	Gray	Glass
910925867311	BGP501 LED45-4S/740 II GF DM11 GR CO CLO	Gray	Glass
910925867312	BGP501 LED55-4S/740 II GF DM11 GR CO CLO	Gray	Glass
910925867313	BGP501 LED50-4S/830 II GF DM11 GR CO CLO	Gray	Glass
910925867314	BGP501 LED65-4S/740 II GF DM11 GR CO CLO	Gray	Glass

Product Data

Order Code	Full Product Name	Product family code
910925866569	BGP502 LED110-4S/740 II DW10 FG GF SRTB	BGP502
910925866570	BGP502 LED100-4S/740 DM11 FG GF SRTB SP	BGP502
910925866571	BGP502 LED120-4S/830 DW10 BL1 FG GF SRTB	BGP502
910925867299	BGP502 LED75-4S/740 II GF DM32 MSP CLO	BGP502
910925867316	BGP502 LED45-4S/740 II GF DM31 GR MSP CO	BGP502
910925867317	BGP502 LED45-4S/830 II GF DM31 GR MSP CO	BGP502
910925867319	BGP502 LED80-4S/740 II GF DM11 GR CO CLO	BGP502
910925867321	BGP502 LED130-4S/740 II GF DM11 GR CO CL	BGP502
910925867323	BGP502 LED180-4S/740 II GF DM11 GR CO CL	BGP502
910925866554	BGP501 LED10-4S/740 DM11 FG GF SRTB SP	BGP501
910925866555	BGP501 LED20-4S/740 DM11 FG GF SRTB S05Z	BGP501
910925866556	BGP501 LED27-4S/740 II DW10 FG GF SRTB S	BGP501
910925866557	BGP501 LED45-4S/740 II DW10 FG GF SRTB S	BGP501
910925866559	BGP501 LED10-4S/830 DW10 BL1 FG GF SRTB	BGP501
910925866565	BGP501 LED18-4S/830 II DM10 PCC TXT GF	BGP501
910925867298	BGP501 LED45-4S/740 II GF DM32 MSP CLO	BGP501
910925867301	BGP501 LED16-4S/740 II GF DM11 GR CO CLO	BGP501
910925867304	BGP501 LED24-4S/740 II GF DM10 GR MSP CO	BGP501
910925867305	BGP501 LED24-4S/830 II GF DM10 GR MSP CO	BGP501
910925867306	BGP501 LED35-4S/740 II GF DM11 GR CO CLO	BGP501
910925867308	BGP501 LED40-4S/740 II GF DM11 GR CO CLO	BGP501
910925867310	BGP501 LED45-4S/740 II GF DM11 GR CO CLO	BGP501
910925867311	BGP501 LED45-4S/740 II GF DM11 GR CO CLO	BGP501
910925867312	BGP501 LED55-4S/740 II GF DM11 GR CO CLO	BGP501
910925867313	BGP501 LED50-4S/830 II GF DM11 GR CO CLO	BGP501
910925867314	BGP501 LED65-4S/740 II GF DM11 GR CO CLO	BGP501

Polar normal diagrams

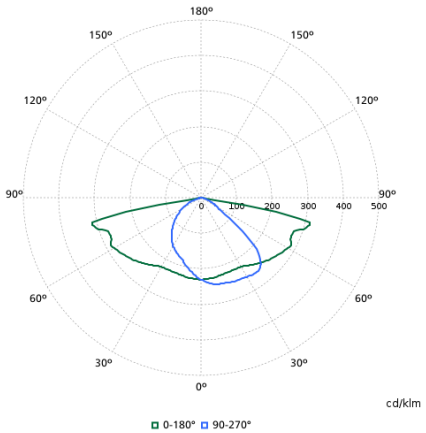

BGP501I - 910925866555

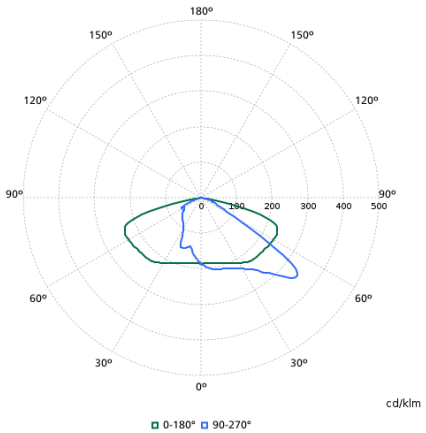

BGP501I - 910925866562

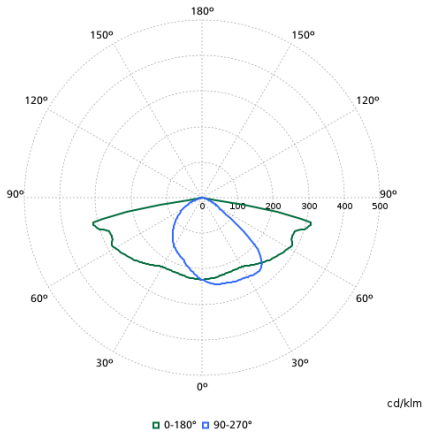

BGP501I - 910925866554

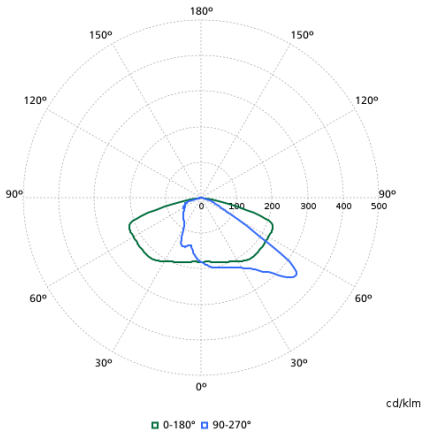

BGP502I - 910925866569

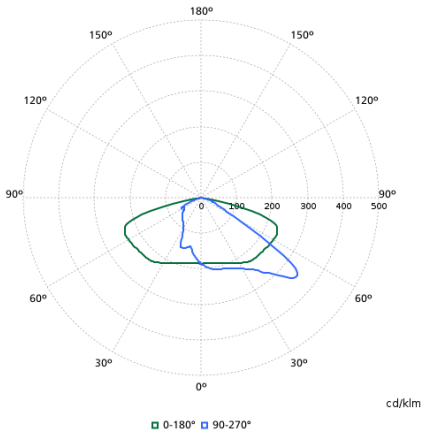

BGP501I - 910925866556

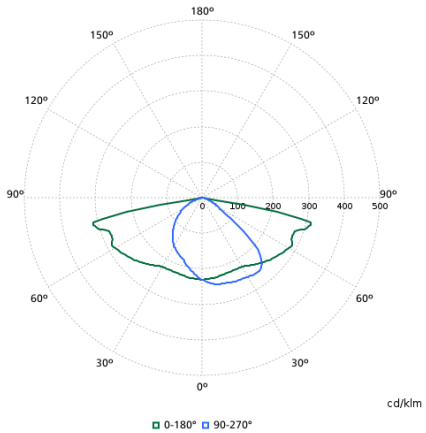

BGP501I - 910925866558

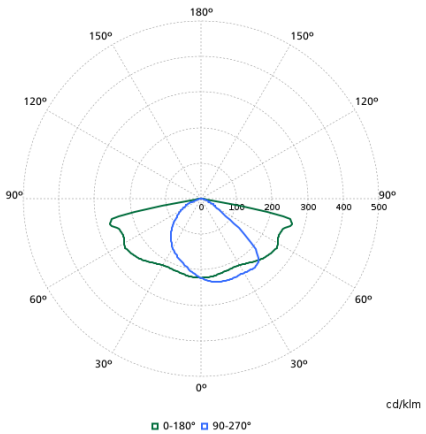

BGP502I - 910925866570

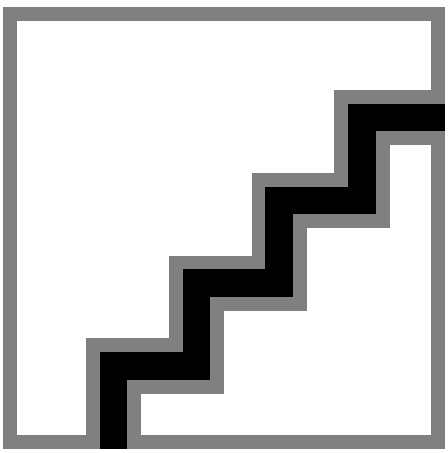

BGP502I - 910925867299

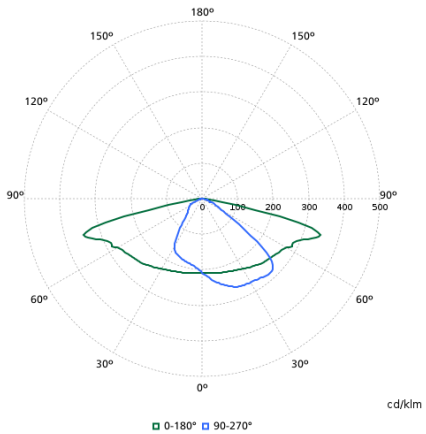

BGP501I - 910925867304

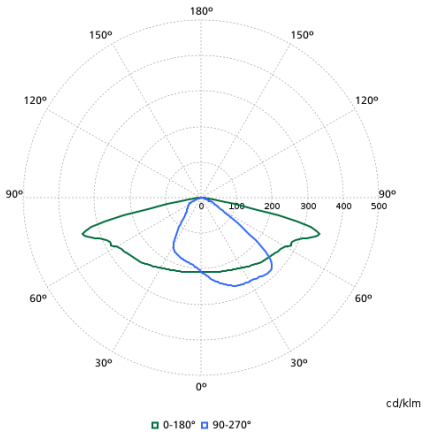

BGP501I - 910925867305

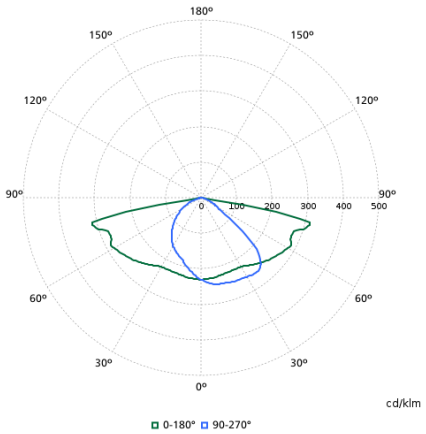

BGP501I - 910925867306

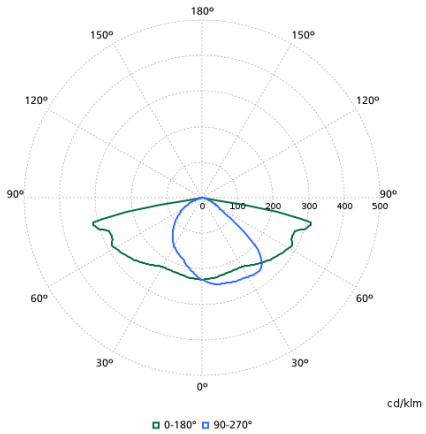

BGP501I - 910925867301

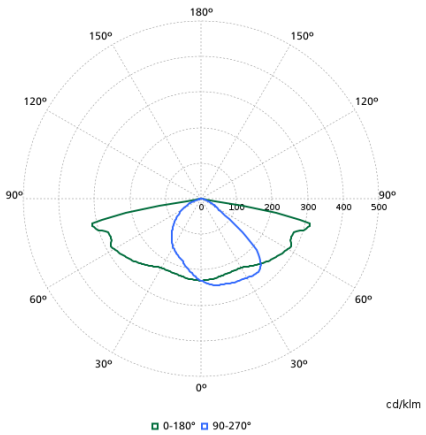

BGP501I - 910925867308

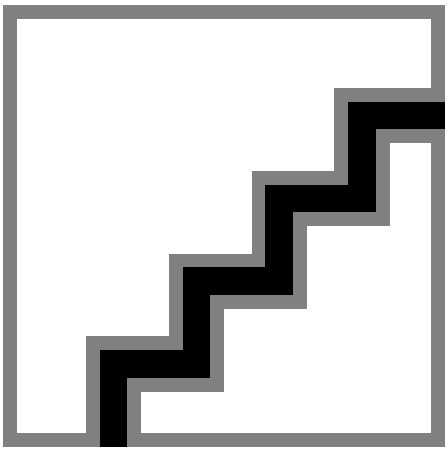

BGP501I - 910925867310

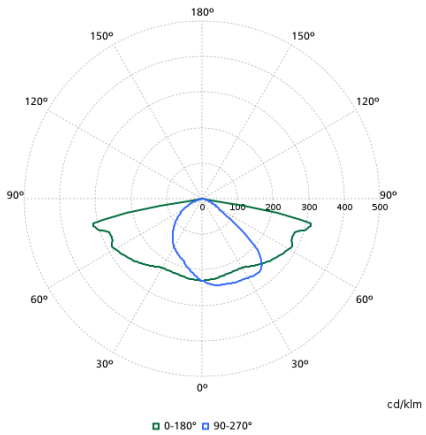

BGP501I - 910925867311

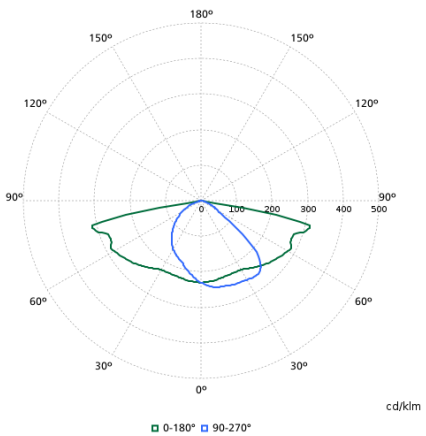

BGP501I - 910925867314

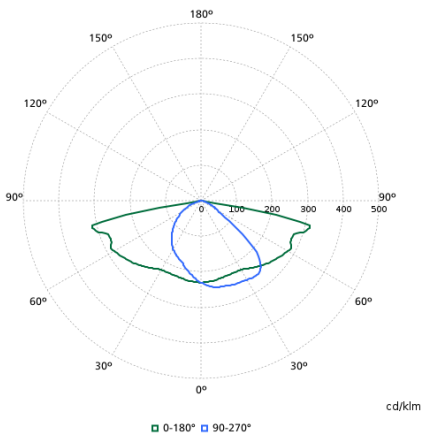

BGP501I - 910925867313

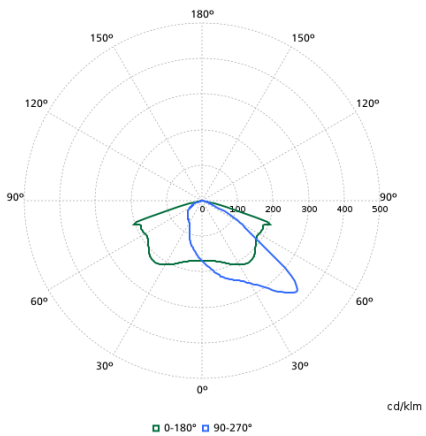

BGP502I - 910925867317

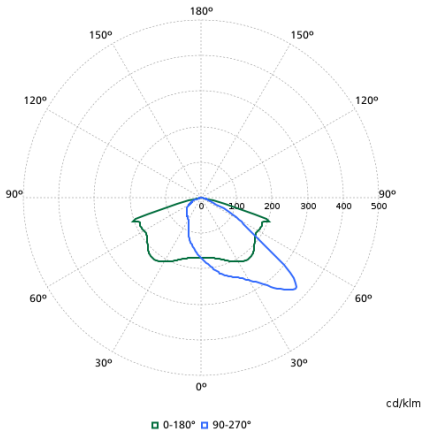

BGP502I - 910925867316

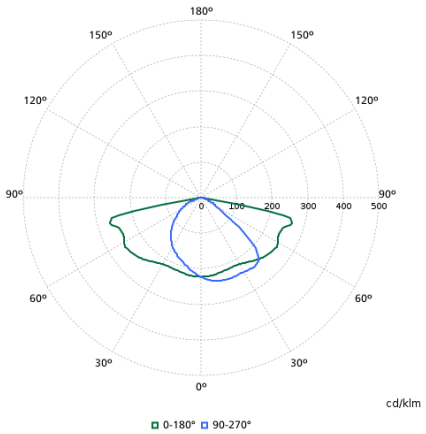

BGP502I - 910925867323

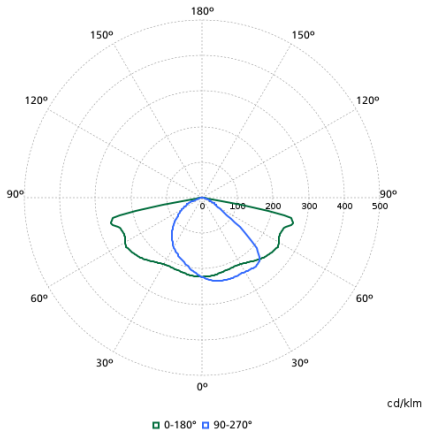

BGP502I - 910925867321

© 2026 Signify Holding. All rights reserved. The information provided herein is subject to change, without notice. Signify does not give any representation or warranty as to the accuracy or completeness of the information included herein and shall not be liable for any action in reliance thereon. The information presented in this document is not intended as any commercial offer and does not form part of any quotation or contract, unless otherwise agreed by Signify. All trademarks are owned by Signify Holding or their respective owners.