PHILIPS

WL070V LED17S/830 PSU II WH

911401826582



Ledinaire Wall-mounted WL070V, 17 W, D285 mm, 1700 lm, 3000 K, IP65

D285 mm, Polycarbonate, White, Signal white (RAL9003), Power supply unit (On/Off), 1700 lm, 17 W, 95 lm/W, 3000 K, (0.4338, 0.4030)SDCM ≤5, Symmetrical, Opal, Polycarbonate, IP65 | Dust penetration-protected, jet-proof, IK08 | 5 J vandal-protected, Safety class II, Push-in connector 3-pole

Warnings and Safety

- The Ledinaire wall-mounted WL070V model can be operated outdoors, but only when all its cables are run inside a building, with a maximum distance of 10 meters.
- For MDU (Motion Detection Unit) versions:
- Sensor coverage may vary between indoor and outdoor applications.
- Strong wind and rain may trigger the sensor if there are no surroundings such as walls, roof etc.
- Any vibration or movement may trigger the sensor. Ensure the sensor is at a suitable distance from any such continuous signal.

General Information

Light source replaceable	No
Number of gear units	1 unit
Driver included	Yes
Sustainability rating	Unclassified
Service tag	No
Lighting Technology	LED
Value ladder	Value
Warranty period	5 years

Light Technical

Luminous Flux	1,700 lm
Correlated Color Temperature (Nom)	3000 K
Luminous Efficacy (rated) (Nom)	95 lm/W
Color rendering index (CRI)	>80
Beam angle of light source	120 degree(s)
Light source color	830 warm white
Optic type	Symmetrical
Luminaire light beam spread	120° x 120°
Unified glare rating CEN	25

Operating and Electrical

Input Voltage	220 to 240 V
Line Frequency	50 or 60 Hz
Initial CLO power consumption	17 W
Average CLO power consumption	- W
Inrush current	20 A
Inrush time	0.04 ms
Power Consumption	17 W
Power Factor (Fraction)	0.9
Connection	Push-in connector 3-pole
Cable	-
Number of products on MCB of 16 A type B	35
Suitable for random switching	Yes
Protection class IEC	Safety class II
Total harmonic distortion	20 %

Controls and Dimming

Dimmable	No
Driver/power unit/transformer	Power supply unit (On/Off)
Control interface	-
Constant light output	No
Maximum dim level	Not applicable

Mechanical and Housing

Housing Material	Polycarbonate
Reflector material	-
Optic material	Polycarbonate
Optical cover material	Polycarbonate
Fixation material	-
Housing Color	White
Optical cover finish	Opal
Overall height	64 mm
Overall diameter	285 mm
Ingress protection code	IP65 [Dust penetration-protected, jet-proof]
Mech. impact protection code	IK08 [5 J vandal-protected]
Net Weight (Piece)	0.780 kg

Approval and Application

Glow-wire test	Temperature 850 °C, duration 30 s
Flammability mark	For mounting on normally flammable surfaces
CE mark	Yes
ENEC mark	-
Photobiological risk	Photobiological risk group 0 @200mm to EN62778
EU RoHS compliant	Yes
Performance ambient temperature Tq	25 °C
Flickering value (PstLM) - Flickering value as per EN 61000-3-3	1
Stroboscopic effect visibility measure (SVM)	1.6
Ambient temperature range	-20 to +40 °C

Initial Performance (IEC Compliant)

Luminous flux tolerance	+/-10%
Initial chromaticity	(0.4338, 0.4030)SDCM ≤5
Power consumption tolerance	+/-10%
Standard Deviation of Colour Matching (McAdam ellipse)	SDCM≤5

Over Time Performance (IEC Compliant)

Control gear failure rate at median useful life 50000 h	7.5 %
Lumen maintenance (EN-IEC 62722-2-1) at median useful life* 50000 h	L70

Sustainability Data

Repair class	Repair Class D, this product is not designed to be repaired.
Embedded carbon (A1-A3)	14.5 kg CO_2e
Product non-virgin material ratio	13.1 %
Recyclable content ratio of the finished product	48.8 %
GWP total B6 (kg CO2eq) Declared Unit	Please calculate using your local energy mix value: Power Declared Unit (kW) * Service life (hrs) Declared Unit * Energy mix (kg CO2eq / kwh)
GWP total B6 (kg CO2eq) Functional Unit	Please calculate using your local energy mix value: Power Declared Unit (kW) * 1000 (lm) /lumen output (lm) Declared Unit * 35000 (hrs) * Energy mix (kg CO2 eq / kwh)
Non-virgin material ratio of the packaging	Cardboard > 80% recycled
Packaging Recyclable content ratio	Cardboard recycling rate > 80%
Packaging Material	Cardboard

Product Data

Order product name	WL070V LED17S/830 PSU II WH
Full product name	WL070V LED17S/830 PSU II WH
Full product code	871951452268899
Order code	911401826582
Material Nr. (12NC)	911401826582
Numerator - Quantity Per Pack	1
EAN/UPC - Product/Case	8719514522688
Numerator - Packs per outer box	6
EAN/UPC - Case	8719514522749

Dimensional drawing

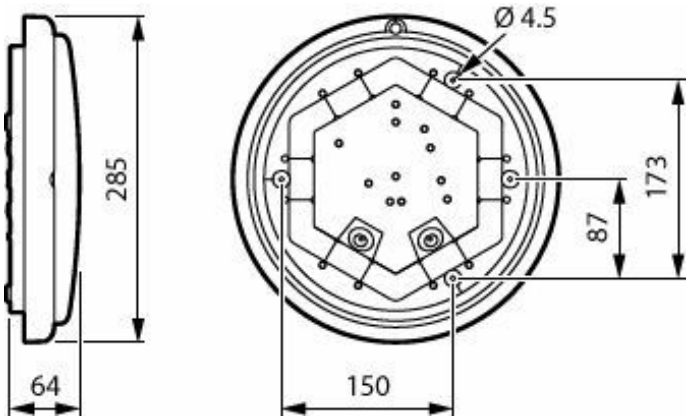

Related Documents

Documents and certificates	Document Name	Download
Environmental Product Declaration	EPD-Philips-Ledinaire-Wall-mounted-WL070V-LED17S-830-PSU-II-WH-911401826582.pdf	Download
Installation Instructions	Installation Instruction Ledinaire wall-mounted WL070V_v2.pdf	Download
Installation Instructions	Installation Instruction Ledinaire Wall-mounted WL070V.pdf	Download

© 2026 Signify Holding. All rights reserved. The information provided herein is subject to change, without notice. Signify does not give any representation or warranty as to the accuracy or completeness of the information included herein and shall not be liable for any action in reliance thereon. The information presented in this document is not intended as any commercial offer and does not form part of any quotation or contract, unless otherwise agreed by Signify. Philips and the Philips Shield Emblem are registered trademarks of Koninklijke Philips N.V.