PHILIPS

External Slim Downlight DL252

8686370

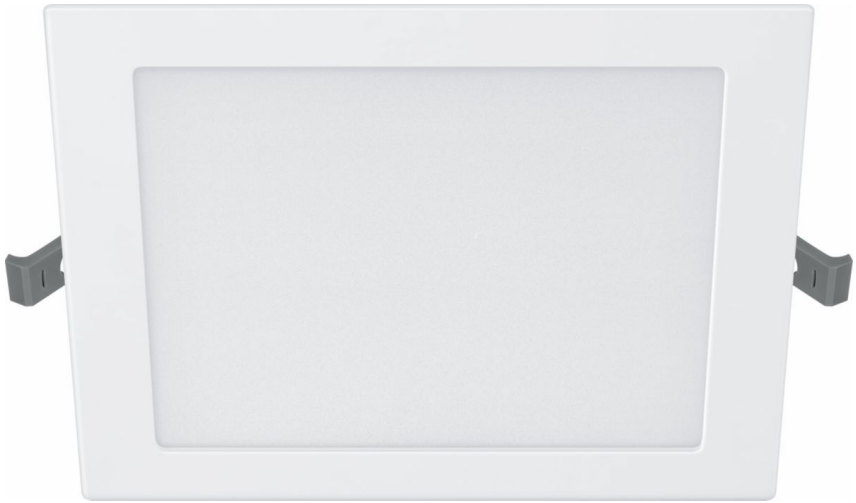

Superslim LED downlight offering superior light quality with extremely good uniformity

A complete family delivering superior light with great uniformity and safety. Choose the best fit for every projects, from multiple lumen packs/wattages, and enjoy great reliable performance free of maintenance.

Benefits

- Superior light quality: Bright and uniform light
- Wide range of products: Variety in lumen/wattage and CCT combinations to cater to different applications.
- Easy installation: Slim design ensures fit in tight spaces

Applications

- Retail
- Offices
- Hospitality

Features

- Design robustness with metal housing
- High efficiency for energy saving: up to 83lm/W
- Long lifetime of 25,000 hours

Versions



929002229801p0



Downlight DL252 G2 SF SQ LED WV

8718699670634p0



Downlight SLIM SURFACE DL252 RD 27K WH

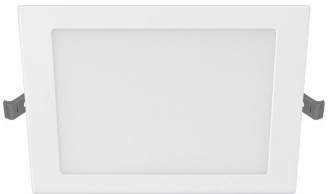

Downlight DL252 G2 R SQ LED WV

Dimensional drawing

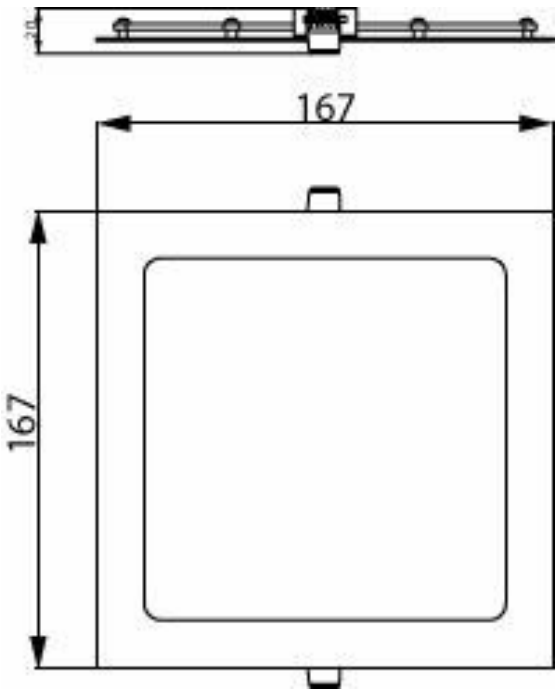

DL252 G2 R SQ LED 900 65K 12W 6" WV 1pk

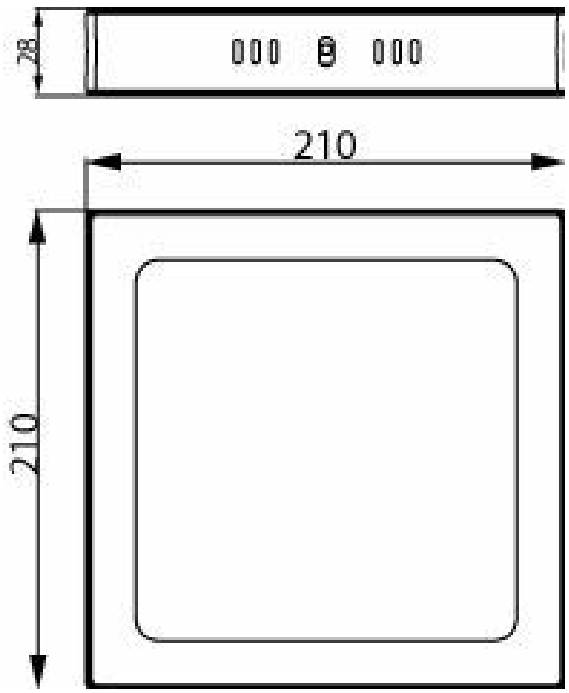

DL252 G2 SF SQ LED 1300 65K 18W 8" WV

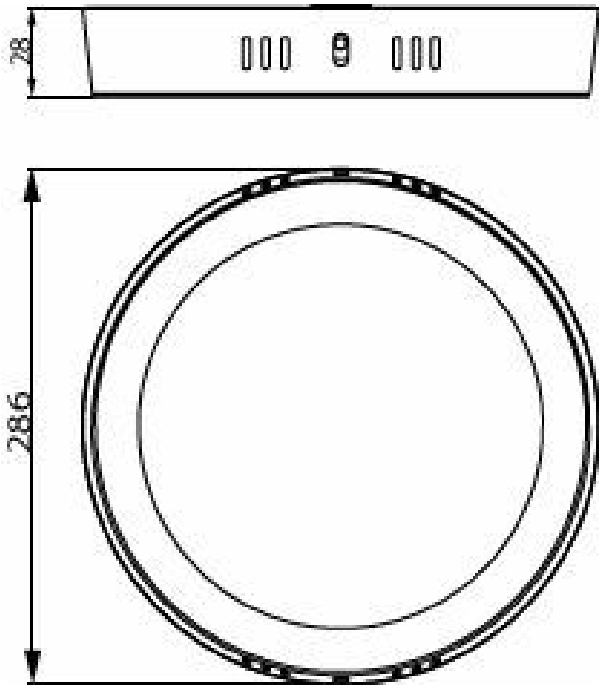

DL252 G2 SF RD LED 2000 30K 24W 11" WV

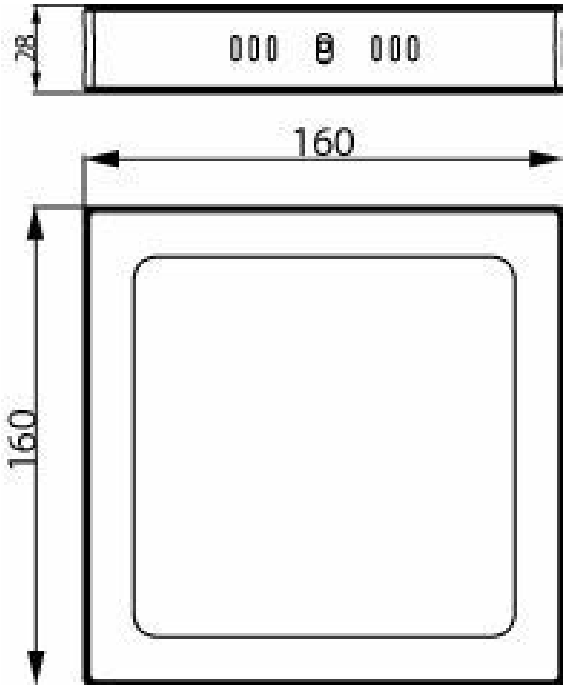

DL252 G2 SF SQ LED 900 40K 12W 6" WV

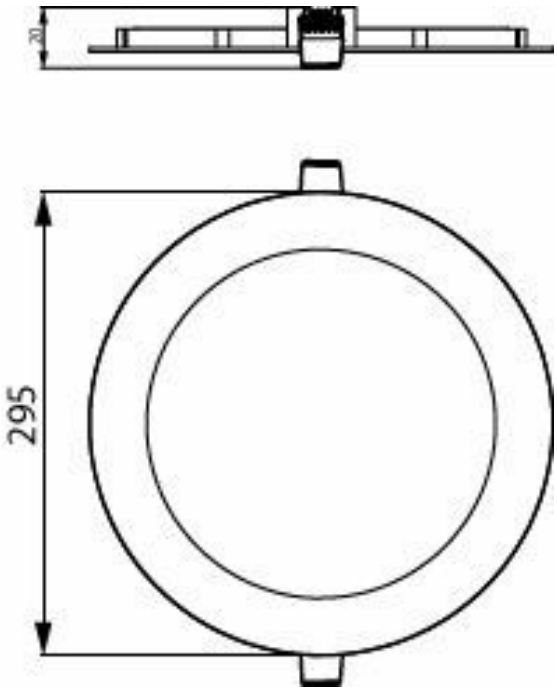

DL252 G2 R Rd LED 2000 40K 24W 11" WV

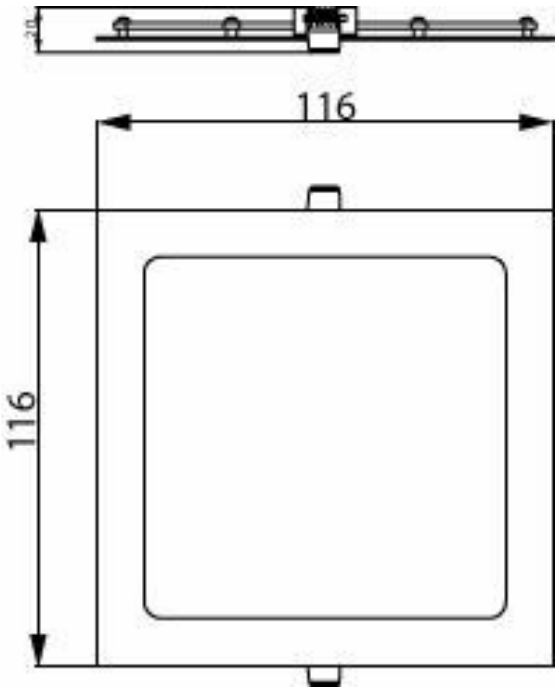

DL252 G2 R SQ LED 400 65K 6W 4" WV

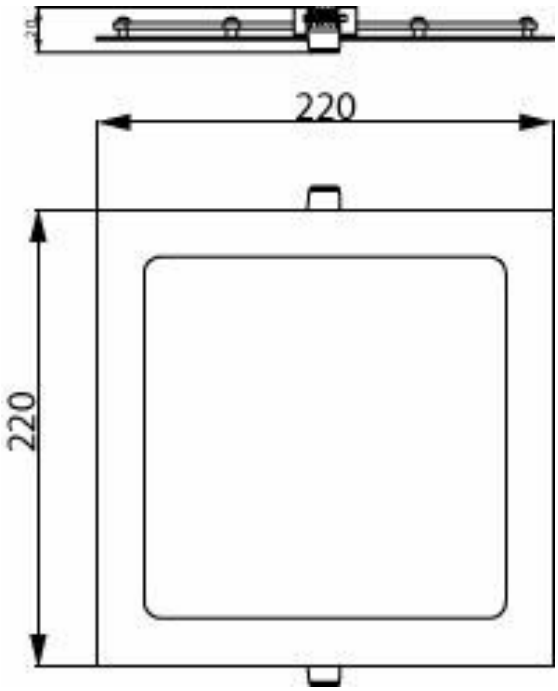

DL252 G2 R SQ LED 1300 65K 18W 8" WV 1pk

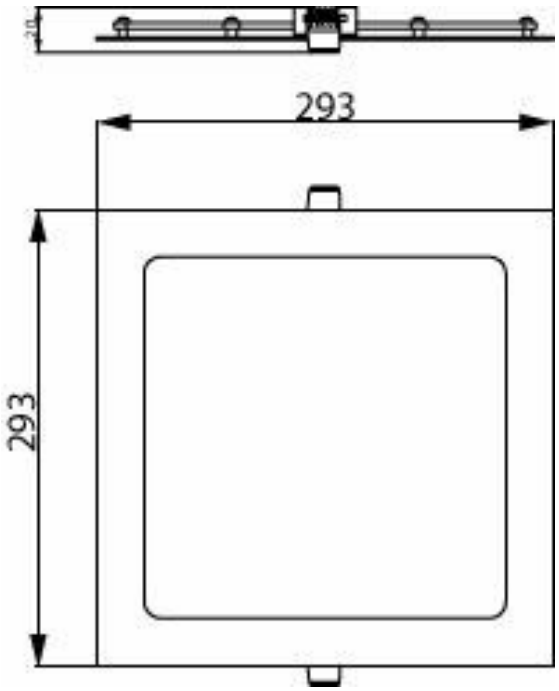

DL252 G2 R SQ LED 2000 30K 24W 11" WV

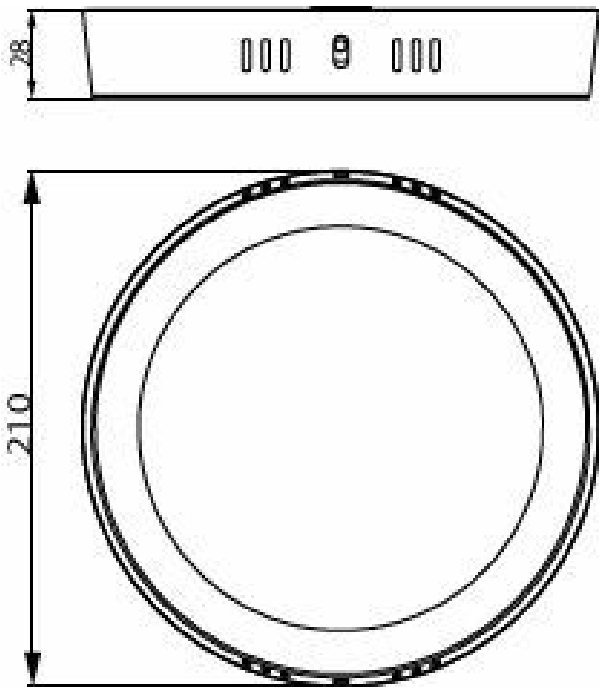

DL252 G2 SF RD LED 1300 40K 18W 8" WV

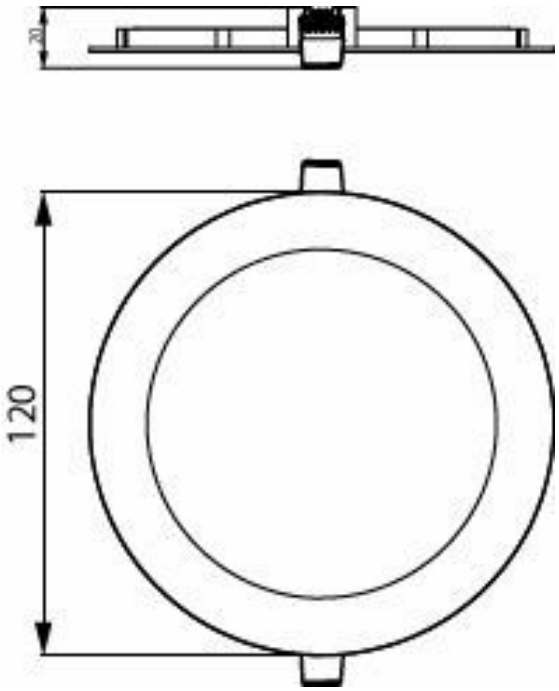

DL252 G2 R Rd LED 400 65K 6W 4" WV

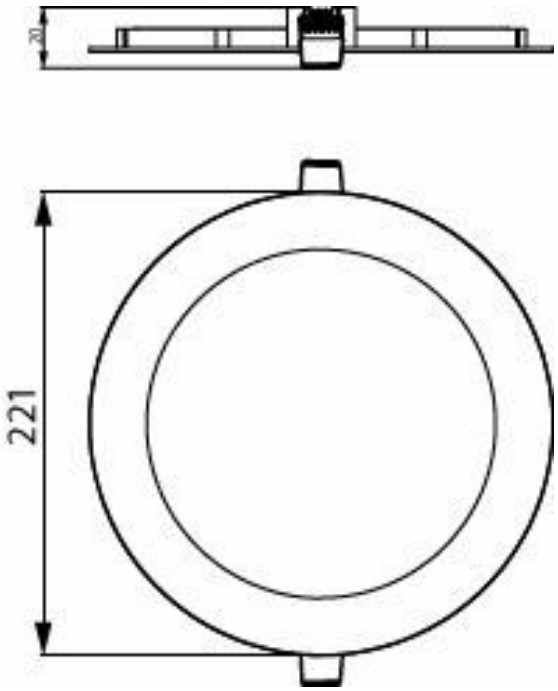

DL252 G2 R Rd LED 1300 30K 18W 8" WV 1pk

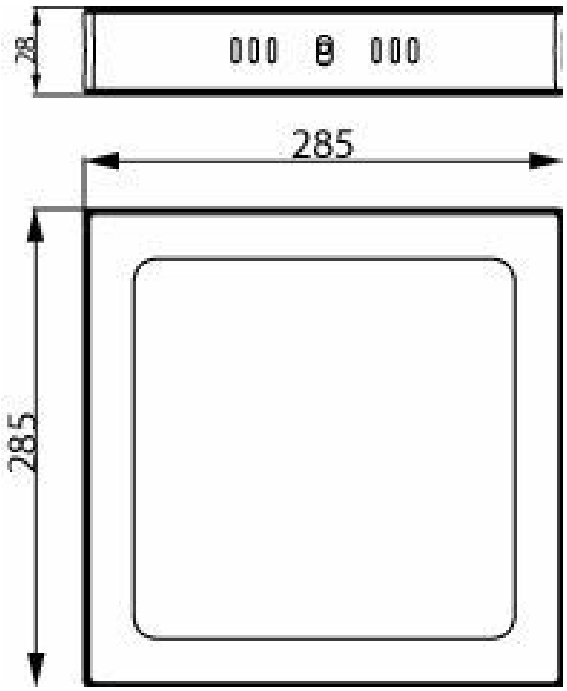

DL252 G2 SF SQ LED 2000 40K 24W 11" WV

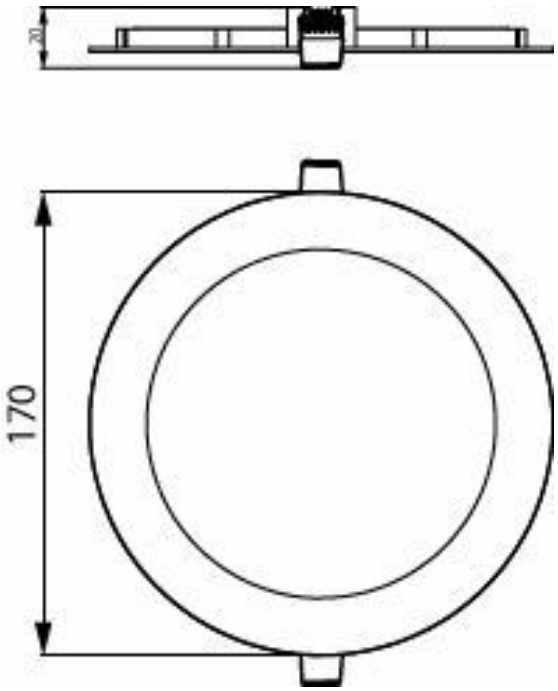

DL252 G2 R Rd LED 900 30K 12W 6" WV 1pk

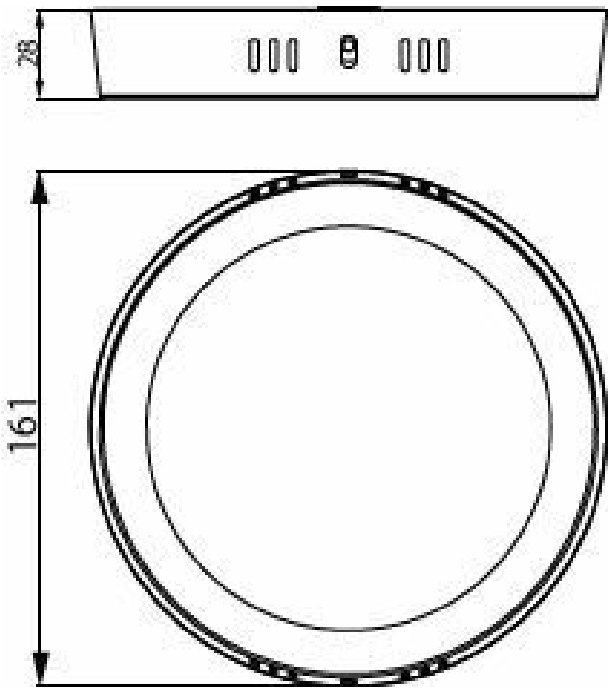

DL252 G2 SF RD LED 900 40K 12W 6" WV

General Information

Light source replaceable	No
Number of gear units	1 unit
Driver included	Yes

Light Technical

Color rendering index (CRI)	80

Operating and Electrical

Input Voltage	110 to 240 V
Line Frequency	50 or 60 Hz
Protection class IEC	Safety class II

Controls and Dimming

Dimmable	No

Mechanical and Housing

Housing Color	White
Ingress protection code	IP20 [Finger-protected]

Approval and Application

Glow-wire test	Temperature 650 °C, duration 30 s
Flammability mark	For mounting on normally flammable surfaces

Initial Performance (IEC Compliant)

Luminous flux tolerance	+10%/-15%

Light Technical

Order Code	Full Product Name	Luminous Flux	Correlated Color Temperature (Nom)	Luminous Efficacy (rated) (Nom)	Optic type
929002636101	DL252 G2 SF RD LED 2000 30K 24W 11" WV	2,000 lm	3000 K	83.00 lm/W	Wide beam
929002636201	DL252 G2 SF RD LED 2000 40K 24W 11" WV	2,000 lm	4000 K	83.00 lm/W	Wide beam
929002635201	DL252 G2 SF SQ LED 900 30K 12W 6" WV	900 lm	3000 K	75.00 lm/W	Wide beam
929002635301	DL252 G2 SF SQ LED 900 40K 12W 6" WV	900 lm	4000 K	75.00 lm/W	Wide beam
929002635401	DL252 G2 SF SQ LED 900 65K 12W 6" WV	900 lm	6500 K	75.00 lm/W	Wide beam
929002635801	DL252 G2 SF SQ LED 1300 30K 18W 8" WV	1,300 lm	3000 K	72.00 lm/W	Wide beam
929002635901	DL252 G2 SF SQ LED 1300 40K 18W 8" WV	1,300 lm	4000 K	72.00 lm/W	Wide beam
929002636001	DL252 G2 SF SQ LED 1300 65K 18W 8" WV	1,300 lm	6500 K	72.00 lm/W	Wide beam
929002636401	DL252 G2 SF SQ LED 2000 30K 24W 11" WV	2,000 lm	3000 K	83.00 lm/W	Wide beam
929002636501	DL252 G2 SF SQ LED 2000 40K 24W 11" WV	2,000 lm	4000 K	83.00 lm/W	Wide beam
929002321901	DL252 G2 R Rd LED 1300 30K 18W 8" WV 1pk	1,300 lm	3000 K	72.00 lm/W	Wide beam
929002322001	DL252 G2 R Rd LED 1300 40K 18W 8" WV 1pk	1,300 lm	4000 K	72.00 lm/W	Wide beam
929002322501	DL252 G2 R Rd LED 900 30K 12W 6" WV 1pk	900 lm	3000 K	75.00 lm/W	Wide beam

Order Code	Full Product Name	Luminous Flux	Correlated Color Tempera-ture (Nom)	Luminous Efficacy (rated) (Nom)	Optic type
929002322601	DL252 G2 R Rd LED 900 40K 12W 6" WV 1pk	900 lm	4000 K	75.00 lm/W	Wide beam
929002345401	DL252 G2 R Rd LED 400 30K 6W 4" WV	400 lm	3000 K	66.00 lm/W	Beam angle 110°
929002345501	DL252 G2 R Rd LED 400 40K 6W 4" WV	400 lm	4000 K	66.00 lm/W	Beam angle 110°
929002345601	DL252 G2 R Rd LED 400 65K 6W 4" WV	400 lm	6500 K	66.00 lm/W	Beam angle 110°
929002346001	DL252 G2 R Rd LED 2000 30K 24W 11" WV	2,000 lm	3000 K	83.00 lm/W	Beam angle 110°
929002346101	DL252 G2 R Rd LED 2000 40K 24W 11" WV	2,000 lm	4000 K	83.00 lm/W	Beam angle 110°
929002346201	DL252 G2 R Rd LED 2000 65K 24W 11" WV	2,000 lm	6500 K	83.00 lm/W	Beam angle 110°
929002634901	DL252 G2 SF RD LED 900 30K 12W 6" WV	900 lm	3000 K	75.00 lm/W	Wide beam
929002635001	DL252 G2 SF RD LED 900 40K 12W 6" WV	900 lm	4000 K	75.00 lm/W	Wide beam
929002635501	DL252 G2 SF RD LED 1300 30K 18W 8" WV	1,300 lm	3000 K	72.00 lm/W	Wide beam
929002635601	DL252 G2 SF RD LED 1300 40K 18W 8" WV	1,300 lm	4000 K	72.00 lm/W	Wide beam
929002322201	DL252 G2 R SQ LED 1300 30K 18W 8" WV 1pk	1,300 lm	3000 K	72.00 lm/W	Wide beam
929002322301	DL252 G2 R SQ LED 1300 40K 18W 8" WV 1pk	1,300 lm	4000 K	72.00 lm/W	Wide beam
929002322401	DL252 G2 R SQ LED 1300 65K 18W 8" WV 1pk	1,300 lm	6500 K	72.00 lm/W	Wide beam
929002322801	DL252 G2 R SQ LED 900 30K 12W 6" WV 1pk	900 lm	3000 K	75.00 lm/W	Wide beam
929002322901	DL252 G2 R SQ LED 900 40K 12W 6" WV 1pk	900 lm	4000 K	75.00 lm/W	Wide beam
929002323001	DL252 G2 R SQ LED 900 65K 12W 6" WV 1pk	900 lm	6500 K	75.00 lm/W	Wide beam
929002345701	DL252 G2 R SQ LED 400 30K 6W 4" WV	400 lm	3000 K	66.00 lm/W	Beam angle 110°
929002345801	DL252 G2 R SQ LED 400 40K 6W 4" WV	400 lm	4000 K	66.00 lm/W	Beam angle 110°
929002345901	DL252 G2 R SQ LED 400 65K 6W 4" WV	400 lm	6500 K	66.00 lm/W	Beam angle 110°
929002346301	DL252 G2 R SQ LED 2000 30K 24W 11" WV	2,000 lm	3000 K	79.00 lm/W	Beam angle 110°
929002346401	DL252 G2 R SQ LED 2000 40K 24W 11" WV	2,000 lm	4000 K	83.00 lm/W	Beam angle 110°

Operating and Electrical

Order Code	Full Product Name	Power Consumption	Suitable for random switching
929002636101	DL252 G2 SF RD LED 2000 30K 24W 11" WV	24 W	No
929002636201	DL252 G2 SF RD LED 2000 40K 24W 11" WV	24 W	No
929002635201	DL252 G2 SF SQ LED 900 30K 12W 6" WV	12 W	No
929002635301	DL252 G2 SF SQ LED 900 40K 12W 6" WV	12 W	No
929002635401	DL252 G2 SF SQ LED 900 65K 12W 6" WV	12 W	No
929002635801	DL252 G2 SF SQ LED 1300 30K 18W 8" WV	18 W	No
929002635901	DL252 G2 SF SQ LED 1300 40K 18W 8" WV	18 W	No
929002636001	DL252 G2 SF SQ LED 1300 65K 18W 8" WV	18 W	No
929002636401	DL252 G2 SF SQ LED 2000 30K 24W 11" WV	24 W	No
929002636501	DL252 G2 SF SQ LED 2000 40K 24W 11" WV	24 W	No
929002321901	DL252 G2 R Rd LED 1300 30K 18W 8" WV 1pk	18 W	No
929002322001	DL252 G2 R Rd LED 1300 40K 18W 8" WV 1pk	18 W	No
929002322501	DL252 G2 R Rd LED 900 30K 12W 6" WV 1pk	12 W	No
929002322601	DL252 G2 R Rd LED 900 40K 12W 6" WV 1pk	12 W	No
929002345401	DL252 G2 R Rd LED 400 30K 6W 4" WV	6 W	Not applicable

Order Code	Full Product Name	Power Consumption	Suitable for random switching
929002345501	DL252 G2 R Rd LED 400 40K 6W 4" WV	6 W	Not applicable
929002345601	DL252 G2 R Rd LED 400 65K 6W 4" WV	6 W	Not applicable
929002346001	DL252 G2 R Rd LED 2000 30K 24W 11" WV	24 W	Not applicable
929002346101	DL252 G2 R Rd LED 2000 40K 24W 11" WV	24 W	Not applicable
929002346201	DL252 G2 R Rd LED 2000 65K 24W 11" WV	24 W	Not applicable
929002634901	DL252 G2 SF RD LED 900 30K 12W 6" WV	12 W	No
929002635001	DL252 G2 SF RD LED 900 40K 12W 6" WV	12 W	No
929002635501	DL252 G2 SF RD LED 1300 30K 18W 8" WV	18 W	No
929002635601	DL252 G2 SF RD LED 1300 40K 18W 8" WV	18 W	No
929002322201	DL252 G2 R SQ LED 1300 30K 18W 8" WV 1pk	18 W	No
929002322301	DL252 G2 R SQ LED 1300 40K 18W 8" WV 1pk	18 W	No
929002322401	DL252 G2 R SQ LED 1300 65K 18W 8" WV 1pk	18 W	No
929002322801	DL252 G2 R SQ LED 900 30K 12W 6" WV 1pk	12 W	No
929002322901	DL252 G2 R SQ LED 900 40K 12W 6" WV 1pk	12 W	No
929002323001	DL252 G2 R SQ LED 900 65K 12W 6" WV 1pk	12 W	No
929002345701	DL252 G2 R SQ LED 400 30K 6W 4" WV	6 W	Not applicable
929002345801	DL252 G2 R SQ LED 400 40K 6W 4" WV	6 W	Not applicable
929002345901	DL252 G2 R SQ LED 400 65K 6W 4" WV	6 W	Not applicable
929002346301	DL252 G2 R SQ LED 2000 30K 24W 11" WV	24 W	Not applicable
929002346401	DL252 G2 R SQ LED 2000 40K 24W 11" WV	24 W	Not applicable

Mechanical and Housing

Order Code	Full Product Name	Mech. impact protection code
929002636101	DL252 G2 SF RD LED 2000 30K 24W 11" WV	IK01
929002636201	DL252 G2 SF RD LED 2000 40K 24W 11" WV	IK01
929002635201	DL252 G2 SF SQ LED 900 30K 12W 6" WV	IK01
929002635301	DL252 G2 SF SQ LED 900 40K 12W 6" WV	IK01
929002635401	DL252 G2 SF SQ LED 900 65K 12W 6" WV	IK01
929002635801	DL252 G2 SF SQ LED 1300 30K 18W 8" WV	IK01
929002635901	DL252 G2 SF SQ LED 1300 40K 18W 8" WV	IK01
929002636001	DL252 G2 SF SQ LED 1300 65K 18W 8" WV	IK01
929002636401	DL252 G2 SF SQ LED 2000 30K 24W 11" WV	IK01
929002636501	DL252 G2 SF SQ LED 2000 40K 24W 11" WV	IK01
929002321901	DL252 G2 R Rd LED 1300 30K 18W 8" WV 1pk	IK01
929002322001	DL252 G2 R Rd LED 1300 40K 18W 8" WV 1pk	IK01
929002322501	DL252 G2 R Rd LED 900 30K 12W 6" WV 1pk	IK01
929002322601	DL252 G2 R Rd LED 900 40K 12W 6" WV 1pk	IK01
929002345401	DL252 G2 R Rd LED 400 30K 6W 4" WV	IK03
929002345501	DL252 G2 R Rd LED 400 40K 6W 4" WV	IK03
929002345601	DL252 G2 R Rd LED 400 65K 6W 4" WV	IK03
929002346001	DL252 G2 R Rd LED 2000 30K 24W 11" WV	IK03
929002346101	DL252 G2 R Rd LED 2000 40K 24W 11" WV	IK03

Order Code	Full Product Name	Mech. impact protection code
929002346201	DL252 G2 R Rd LED 2000 65K 24W 11" WV	IK03
929002634901	DL252 G2 SF RD LED 900 30K 12W 6" WV	IK01
929002635001	DL252 G2 SF RD LED 900 40K 12W 6" WV	IK01
929002635501	DL252 G2 SF RD LED 1300 30K 18W 8" WV	IK01
929002635601	DL252 G2 SF RD LED 1300 40K 18W 8" WV	IK01
929002322201	DL252 G2 R SQ LED 1300 30K 18W 8" WV 1pk	IK01
929002322301	DL252 G2 R SQ LED 1300 40K 18W 8" WV 1pk	IK01
929002322401	DL252 G2 R SQ LED 1300 65K 18W 8" WV 1pk	IK01
929002322801	DL252 G2 R SQ LED 900 30K 12W 6" WV 1pk	IK01
929002322901	DL252 G2 R SQ LED 900 40K 12W 6" WV 1pk	IK01
929002323001	DL252 G2 R SQ LED 900 65K 12W 6" WV 1pk	IK01
929002345701	DL252 G2 R SQ LED 400 30K 6W 4" WV	IK03
929002345801	DL252 G2 R SQ LED 400 40K 6W 4" WV	IK03
929002345901	DL252 G2 R SQ LED 400 65K 6W 4" WV	IK03
929002346301	DL252 G2 R SQ LED 2000 30K 24W 11" WV	IK03
929002346401	DL252 G2 R SQ LED 2000 40K 24W 11" WV	IK03

Approval and Application

Order Code	Full Product Name	Ambient temperature range
929002636101	DL252 G2 SF RD LED 2000 30K 24W 11" WV	-20 to +40 °C
929002636201	DL252 G2 SF RD LED 2000 40K 24W 11" WV	-20 to +40 °C
929002635201	DL252 G2 SF SQ LED 900 30K 12W 6" WV	-20 to +40 °C
929002635301	DL252 G2 SF SQ LED 900 40K 12W 6" WV	-20 to +40 °C
929002635401	DL252 G2 SF SQ LED 900 65K 12W 6" WV	-20 to +40 °C
929002635801	DL252 G2 SF SQ LED 1300 30K 18W 8" WV	-20 to +40 °C
929002635901	DL252 G2 SF SQ LED 1300 40K 18W 8" WV	-20 to +40 °C
929002636001	DL252 G2 SF SQ LED 1300 65K 18W 8" WV	-20 to +40 °C
929002636401	DL252 G2 SF SQ LED 2000 30K 24W 11" WV	-20 to +40 °C
929002636501	DL252 G2 SF SQ LED 2000 40K 24W 11" WV	-20 to +40 °C
929002321901	DL252 G2 R Rd LED 1300 30K 18W 8" WV 1pk	-20 to +40 °C
929002322001	DL252 G2 R Rd LED 1300 40K 18W 8" WV 1pk	-20 to +40 °C
929002322501	DL252 G2 R Rd LED 900 30K 12W 6" WV 1pk	-20 to +40 °C
929002322601	DL252 G2 R Rd LED 900 40K 12W 6" WV 1pk	-20 to +40 °C
929002345401	DL252 G2 R Rd LED 400 30K 6W 4" WV	-10 to +40 °C
929002345501	DL252 G2 R Rd LED 400 40K 6W 4" WV	-10 to +40 °C
929002345601	DL252 G2 R Rd LED 400 65K 6W 4" WV	-10 to +40 °C
929002346001	DL252 G2 R Rd LED 2000 30K 24W 11" WV	-10 to +40 °C
929002346101	DL252 G2 R Rd LED 2000 40K 24W 11" WV	-10 to +40 °C
929002346201	DL252 G2 R Rd LED 2000 65K 24W 11" WV	-10 to +40 °C
929002634901	DL252 G2 SF RD LED 900 30K 12W 6" WV	-20 to +40 °C
929002635001	DL252 G2 SF RD LED 900 40K 12W 6" WV	-20 to +40 °C
929002635501	DL252 G2 SF RD LED 1300 30K 18W 8" WV	-20 to +40 °C

Order Code	Full Product Name	Ambient temperature range
929002635601	DL252 G2 SF RD LED 1300 40K 18W 8" WV	-20 to +40 °C
929002322201	DL252 G2 R SQ LED 1300 30K 18W 8" WV 1pk	-20 to +40 °C
929002322301	DL252 G2 R SQ LED 1300 40K 18W 8" WV 1pk	-20 to +40 °C
929002322401	DL252 G2 R SQ LED 1300 65K 18W 8" WV 1pk	-20 to +40 °C
929002322801	DL252 G2 R SQ LED 900 30K 12W 6" WV 1pk	-20 to +40 °C
929002322901	DL252 G2 R SQ LED 900 40K 12W 6" WV 1pk	-20 to +40 °C
929002323001	DL252 G2 R SQ LED 900 65K 12W 6" WV 1pk	-20 to +40 °C
929002345701	DL252 G2 R SQ LED 400 30K 6W 4" WV	-10 to +40 °C
929002345801	DL252 G2 R SQ LED 400 40K 6W 4" WV	-10 to +40 °C
929002345901	DL252 G2 R SQ LED 400 65K 6W 4" WV	-10 to +40 °C
929002346301	DL252 G2 R SQ LED 2000 30K 24W 11" WV	-10 to +40 °C
929002346401	DL252 G2 R SQ LED 2000 40K 24W 11" WV	-10 to +40 °C

Initial Performance (IEC Compliant)

Order Code	Full Product Name	Initial chromaticity
929002636101	DL252 G2 SF RD LED 2000 30K 24W 11" WV	(0.440, 0.403) <6
929002636201	DL252 G2 SF RD LED 2000 40K 24W 11" WV	(0.380, 0.380) <6
929002635201	DL252 G2 SF SQ LED 900 30K 12W 6" WV	(0.440, 0.403) <6
929002635301	DL252 G2 SF SQ LED 900 40K 12W 6" WV	(0.380, 0.380) <6
929002635401	DL252 G2 SF SQ LED 900 65K 12W 6" WV	(0.313, 0.337) <6
929002635801	DL252 G2 SF SQ LED 1300 30K 18W 8" WV	(0.440, 0.403) <6
929002635901	DL252 G2 SF SQ LED 1300 40K 18W 8" WV	(0.380, 0.380) <6
929002636001	DL252 G2 SF SQ LED 1300 65K 18W 8" WV	(0.313, 0.337) <6
929002636401	DL252 G2 SF SQ LED 2000 30K 24W 11" WV	(0.440, 0.403) <6
929002636501	DL252 G2 SF SQ LED 2000 40K 24W 11" WV	(0.380, 0.380) <6
929002321901	DL252 G2 R Rd LED 1300 30K 18W 8" WV 1pk	(0.440, 0.403) <6
929002322001	DL252 G2 R Rd LED 1300 40K 18W 8" WV 1pk	(0.380, 0.380) <6
929002322501	DL252 G2 R Rd LED 900 30K 12W 6" WV 1pk	(0.440, 0.403) <6
929002322601	DL252 G2 R Rd LED 900 40K 12W 6" WV 1pk	(0.380, 0.380) <6
929002345401	DL252 G2 R Rd LED 400 30K 6W 4" WV	(0.4400，, 0.4030) 6 SDCM
929002345501	DL252 G2 R Rd LED 400 40K 6W 4" WV	(0.3800，, 0.3800) 6 SDCM
929002345601	DL252 G2 R Rd LED 400 65K 6W 4" WV	(0.3130，, 0.3370) 6 SDCM
929002346001	DL252 G2 R Rd LED 2000 30K 24W 11" WV	(0.4400，, 0.4030) 6 SDCM
929002346101	DL252 G2 R Rd LED 2000 40K 24W 11" WV	(0.3800，, 0.3800) 6 SDCM
929002346201	DL252 G2 R Rd LED 2000 65K 24W 11" WV	(0.3130，, 0.3370) 6 SDCM
929002634901	DL252 G2 SF RD LED 900 30K 12W 6" WV	(0.440, 0.403) <6
929002635001	DL252 G2 SF RD LED 900 40K 12W 6" WV	(0.380, 0.380) <6
929002635501	DL252 G2 SF RD LED 1300 30K 18W 8" WV	(0.440, 0.403) <6
929002635601	DL252 G2 SF RD LED 1300 40K 18W 8" WV	(0.380, 0.380) <6
929002322201	DL252 G2 R SQ LED 1300 30K 18W 8" WV 1pk	(0.440, 0.403) <6
929002322301	DL252 G2 R SQ LED 1300 40K 18W 8" WV 1pk	(0.380, 0.380) <6
929002322401	DL252 G2 R SQ LED 1300 65K 18W 8" WV 1pk	(0.313, 0.337) <6

Order Code	Full Product Name	Initial chromaticity
929002322801	DL252 G2 R SQ LED 900 30K 12W 6" WV 1pk	(0.440, 0.403) <6
929002322901	DL252 G2 R SQ LED 900 40K 12W 6" WV 1pk	(0.380, 0.380) <6
929002323001	DL252 G2 R SQ LED 900 65K 12W 6" WV 1pk	(0.313, 0.337) <6
929002345701	DL252 G2 R SQ LED 400 30K 6W 4" WV	(0.4400 , , 0.4030) 6 SDCM
929002345801	DL252 G2 R SQ LED 400 40K 6W 4" WV	(0.3800 , , 0.3800) 6 SDCM
929002345901	DL252 G2 R SQ LED 400 65K 6W 4" WV	(0.3130 , , 0.3370) 6 SDCM
929002346301	DL252 G2 R SQ LED 2000 30K 24W 11" WV	(0.4400 , , 0.4030) 6 SDCM
929002346401	DL252 G2 R SQ LED 2000 40K 24W 11" WV	(0.3800 , , 0.3800) 6 SDCM

Over Time Performance (IEC Compliant)

Order Code	Full Product Name	Driver failure rate at 5000 h
929002636101	DL252 G2 SF RD LED 2000 30K 24W 11" WV	0.05 %
929002636201	DL252 G2 SF RD LED 2000 40K 24W 11" WV	0.05 %
929002635201	DL252 G2 SF SQ LED 900 30K 12W 6" WV	0.05 %
929002635301	DL252 G2 SF SQ LED 900 40K 12W 6" WV	0.05 %
929002635401	DL252 G2 SF SQ LED 900 65K 12W 6" WV	0.05 %
929002635801	DL252 G2 SF SQ LED 1300 30K 18W 8" WV	0.05 %
929002635901	DL252 G2 SF SQ LED 1300 40K 18W 8" WV	0.05 %
929002636001	DL252 G2 SF SQ LED 1300 65K 18W 8" WV	0.05 %
929002636401	DL252 G2 SF SQ LED 2000 30K 24W 11" WV	0.05 %
929002636501	DL252 G2 SF SQ LED 2000 40K 24W 11" WV	0.05 %
929002321901	DL252 G2 R Rd LED 1300 30K 18W 8" WV 1pk	0.05 %
929002322001	DL252 G2 R Rd LED 1300 40K 18W 8" WV 1pk	0.05 %
929002322501	DL252 G2 R Rd LED 900 30K 12W 6" WV 1pk	0.05 %
929002322601	DL252 G2 R Rd LED 900 40K 12W 6" WV 1pk	0.05 %
929002345401	DL252 G2 R Rd LED 400 30K 6W 4" WV	0.015 %
929002345501	DL252 G2 R Rd LED 400 40K 6W 4" WV	0.015 %
929002345601	DL252 G2 R Rd LED 400 65K 6W 4" WV	0.015 %
929002346001	DL252 G2 R Rd LED 2000 30K 24W 11" WV	0.015 %
929002346101	DL252 G2 R Rd LED 2000 40K 24W 11" WV	0.015 %
929002346201	DL252 G2 R Rd LED 2000 65K 24W 11" WV	0.015 %
929002634901	DL252 G2 SF RD LED 900 30K 12W 6" WV	0.05 %
929002635001	DL252 G2 SF RD LED 900 40K 12W 6" WV	0.05 %
929002635501	DL252 G2 SF RD LED 1300 30K 18W 8" WV	0.05 %
929002635601	DL252 G2 SF RD LED 1300 40K 18W 8" WV	0.05 %
929002322201	DL252 G2 R SQ LED 1300 30K 18W 8" WV 1pk	0.05 %
929002322301	DL252 G2 R SQ LED 1300 40K 18W 8" WV 1pk	0.05 %
929002322401	DL252 G2 R SQ LED 1300 65K 18W 8" WV 1pk	0.05 %
929002322801	DL252 G2 R SQ LED 900 30K 12W 6" WV 1pk	0.05 %
929002322901	DL252 G2 R SQ LED 900 40K 12W 6" WV 1pk	0.05 %
929002323001	DL252 G2 R SQ LED 900 65K 12W 6" WV 1pk	0.05 %
929002345701	DL252 G2 R SQ LED 400 30K 6W 4" WV	0.015 %

Order Code	Full Product Name	Driver failure rate at 5000 h
929002345801	DL252 G2 R SQ LED 400 40K 6W 4" WV	0.015 %
929002345901	DL252 G2 R SQ LED 400 65K 6W 4" WV	0.015 %
929002346301	DL252 G2 R SQ LED 2000 30K 24W 11" WV	0.015 %
929002346401	DL252 G2 R SQ LED 2000 40K 24W 11" WV	0.015 %

© 2026 Signify Holding. All rights reserved. The information provided herein is subject to change, without notice. Signify does not give any representation or warranty as to the accuracy or completeness of the information included herein and shall not be liable for any action in reliance thereon. The information presented in this document is not intended as any commercial offer and does not form part of any quotation or contract, unless otherwise agreed by Signify. Philips and the Philips Shield Emblem are registered trademarks of Koninklijke Philips N.V.