PHILIPS

GreenSpace Slim Downlight G2

DN150



Low energy LED downlights with super slim design

GreenSpace Slim downlight is ultra-thin product for general lighting applications with limited build-in height, which is suitable for a series of lighting applications in general indoor areas. Available in a wide variety of lumen packs, cut out size, selectable CCT with less SKUs and dimming option.

Benefits

- Get rid of installation limitation
- Easy stock built up to support fast delivery task
- Strong energy saving
- Long term quality & reliability
- Super color consistency
- Wide control options

Applications

- General indoor area
- Office
- Corridors

Features

- Delivering height less than 20mm (without clip) supported by edge lit structure
- 3000K/4000K selectable is enabling less SKU
- Up to 125lm/W
- 50Khrs L80B50 lifetime
- SDCM 3
- PSD & WIA options available

Versions



RTP-of-GreenSpace-Slim-Downlight-G2



RTP-of-GreenSpace-Slim-Downlight-G2



RTP-of-GreenSpace-Slim-Downlight-G2

Dimensional drawing

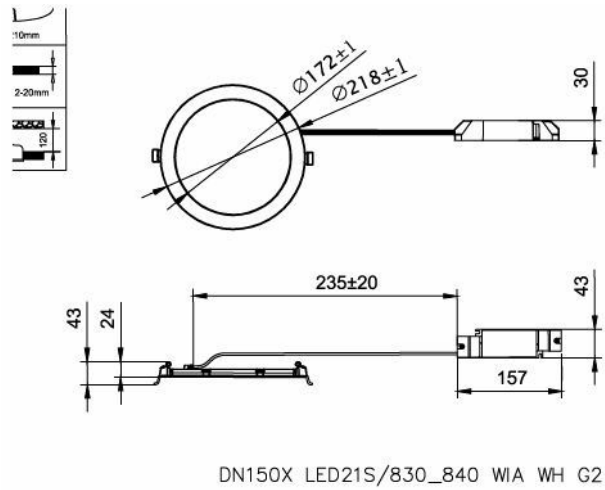

DN150X LED21S/830_840 WIA WH G2

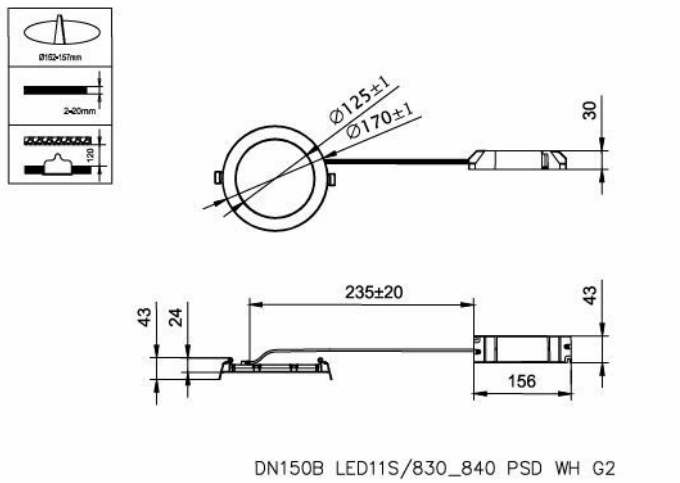

DN150B LED11S/830_840 PSD WH G2 GC

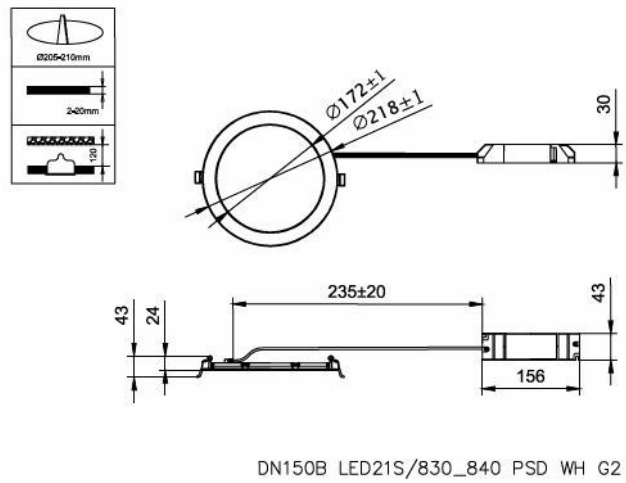

DN150B LED21S/830_840 PSD WH G2 GC

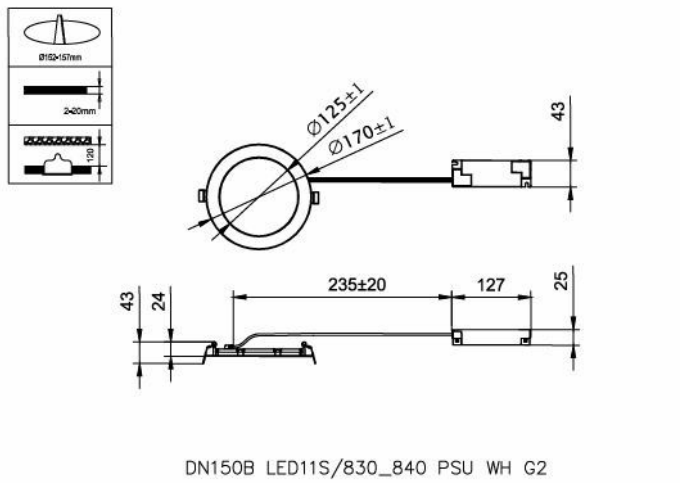

DN150B LED11S/830_840 PSU WH G2

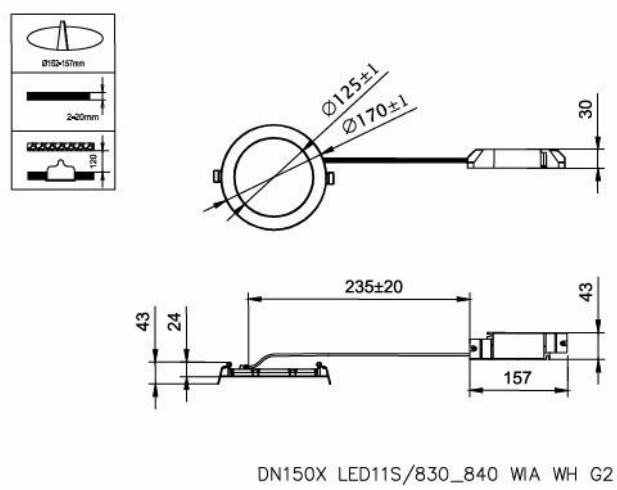

DN150X LED11S/830_840 WIA WH G2

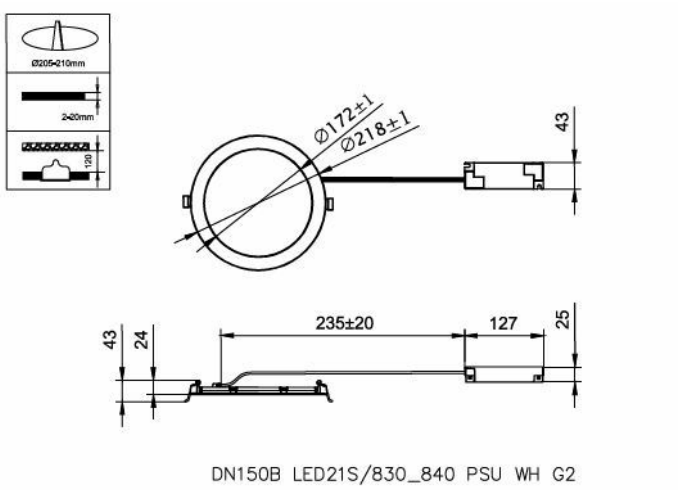

DN150B LED21S/830_840 PSU WH G2

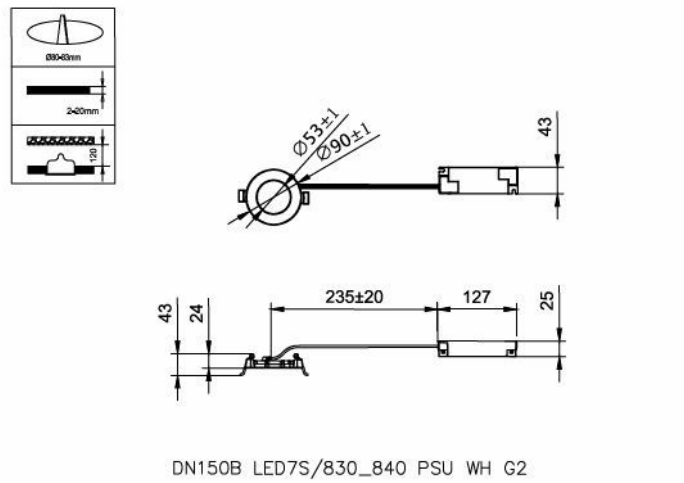

DN150B LED7S/830_840 PSU WH G2 GC

General Information

Number of gear units	1 unit
Gear	EB [Electronic]
Driver included	Yes

Light Technical

Color rendering index (CRI)	≥80
Number of light sources	1
Beam angle of light source	90 degree(s)

Operating and Electrical

Input Voltage	220 to 240 V
Line Frequency	50 or 60 Hz
Suitable for random switching	No
Protection class IEC	Safety class II

Mechanical and Housing

Housing Color	White RAL 9003
Ingress protection code	IP20(IP44 front)
Mech. impact protection code	IK03 [0.3 J]
Optical cover type	Microprismatic cover

Approval and Application

Glow-wire test	Temperature 650 °C, duration 30 s
Flammability mark	For mounting on normally flammable surfaces
CE mark	Yes
ENEC mark	-
Ambient temperature range	-20 to +40 °C

Initial Performance (IEC Compliant)

Luminous flux tolerance	-10%,+15%
Initial chromaticity	(0.43,0.40) SDCM<3; (0.38,0.38) SDCM<3

Light Technical

Order Code	Full Product Name	Luminous Flux	Correlated Color Temperature (Nom)	Luminous Efficacy (rated) (Nom)	Optic type
911401829388	DN150B LED7S/830_840 PSU WH G2 GC	715 lm	3000 K 4000 K	110 lm/W	Beam angle 90° Symmetrical
911401895287	DN150B LED7S/830_840 PSU WH G2	715 lm	3000 K 4000 K	110 lm/W	Beam angle 90° Symmetrical
911401829588	DN150B LED21S/830_840 PSU WH G2 GC	2,100 lm	3000 K 4000 K	125 lm/W	Beam angle 90° Symmetrical
911401829788	DN150B LED21S/830_840 PSD WH G2 GC	2,100 lm	3000 K 4000 K	117 lm/W	Beam angle 90° Symmetrical
911401895487	DN150B LED21S/830_840 PSU WH G2	2,100 lm	3000 K 4000 K	125 lm/W	Beam angle 90° Symmetrical
911401895687	DN150B LED21S/830_840 PSD WH G2	2,100 lm	3000 K 4000 K	117 lm/W	Beam angle 90° Symmetrical
911401895887	DN150X LED21S/830_840 WIA WH G2	2,100 lm	3000 K 4000 K	120 lm/W	Beam angle 90° Symmetrical

Order Code	Full Product Name	Luminous Flux	Correlated Color Temperature (Nom)	Luminous Efficacy (rated) (Nom)	Optic type
911401829488	DN150B LED11S/830_840 PSU WH G2 GC	1,150 lm	3000 K 4000 K	120 lm/W	Beam angle 90° Symmetrical
911401829688	DN150B LED11S/830_840 PSD WH G2 GC	1,150 lm	3000 K 4000 K	115 lm/W	Beam angle 90° Symmetrical
911401895387	DN150B LED11S/830_840 PSU WH G2	1,150 lm	3000 K 4000 K	120 lm/W	Beam angle 90° Symmetrical
911401895587	DN150B LED11S/830_840 PSD WH G2	1,150 lm	3000 K 4000 K	115 lm/W	Beam angle 90° Symmetrical
911401895787	DN150X LED11S/830_840 WIA WH G2	1,150 lm	3000 K 4000 K	115 lm/W	Beam angle 90° Symmetrical

Operating and Electrical

Order Code	Full Product Name	Power Consumption
911401829388	DN150B LED7S/830_840 PSU WH G2 GC	6.5 W
911401895287	DN150B LED7S/830_840 PSU WH G2	6.5 W
911401829588	DN150B LED21S/830_840 PSU WH G2 GC	16.5 W
911401829788	DN150B LED21S/830_840 PSD WH G2 GC	18 W
911401895487	DN150B LED21S/830_840 PSU WH G2	16.5 W
911401895687	DN150B LED21S/830_840 PSD WH G2	18 W
911401895887	DN150X LED21S/830_840 WIA WH G2	17.5 W
911401829488	DN150B LED11S/830_840 PSU WH G2 GC	9.5 W
911401829688	DN150B LED11S/830_840 PSD WH G2 GC	10 W
911401895387	DN150B LED11S/830_840 PSU WH G2	9.5 W
911401895587	DN150B LED11S/830_840 PSD WH G2	10 W
911401895787	DN150X LED11S/830_840 WIA WH G2	10 W

Controls and Dimming

Order Code	Full Product Name	Dimmable	Maximum dim level
911401829388	DN150B LED7S/830_840 PSU WH G2 GC	-	Not applicable
911401895287	DN150B LED7S/830_840 PSU WH G2	-	Not applicable
911401829588	DN150B LED21S/830_840 PSU WH G2 GC	-	Not applicable
911401829788	DN150B LED21S/830_840 PSD WH G2 GC	DALI	1%
911401895487	DN150B LED21S/830_840 PSU WH G2	-	Not applicable
911401895687	DN150B LED21S/830_840 PSD WH G2	DALI	1%
911401895887	DN150X LED21S/830_840 WIA WH G2	Wireless Dim	1%
911401829488	DN150B LED11S/830_840 PSU WH G2 GC	-	Not applicable
911401829688	DN150B LED11S/830_840 PSD WH G2 GC	DALI	1%
911401895387	DN150B LED11S/830_840 PSU WH G2	-	Not applicable
911401895587	DN150B LED11S/830_840 PSD WH G2	DALI	1%
911401895787	DN150X LED11S/830_840 WIA WH G2	Wireless Dim	1%

© 2026 Signify Holding. All rights reserved. The information provided herein is subject to change, without notice. Signify does not give any representation or warranty as to the accuracy or completeness of the information included herein and shall not be liable for any action in reliance thereon. The information presented in this document is not intended as any commercial offer and does not form part of any quotation or contract, unless otherwise agreed by Signify. Philips and the Philips Shield Emblem are registered trademarks of Koninklijke Philips N.V.