PHILIPS

PrimaVision Compact for CDM

DPVCMPCT



High quality and robust performance

High-quality, compact and lightweight HID electronic gear for optimal and reliable performance of 20, 35, 50 and 70 W CDM lamps

Benefits

- Optimal lamp performance thanks to minimal lamp power tolerance
- CDM lamp life increased by up to 30%
- Eliminates all visible lamp flicker

Applications

- Accent and decorative lighting for shops, public spaces, lobbies and offices
- Suitable for indoor use only

Features

- Minimal lamp power spread
- Low gear energy losses
- Lamp end-of-life detection
- High Tambient and Tcase temperatures
- Long lifetime of 40,000 hours

Versions



GPPR_IPVG4pp_PHL_0001-Product photo



GPPR IPVG4pp PHL 0008

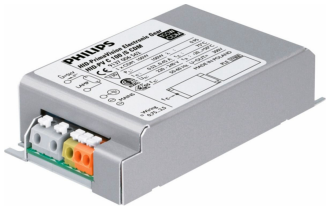

GPPR IPVG4pp PHL 0010

Dimensional drawing

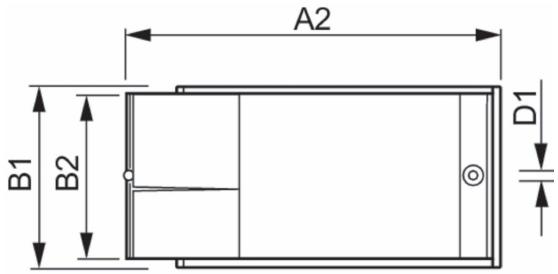

Product	D1	C1	A1	A2	B1
HID-PV C 35 /I CDM 220-240V 50/60Hz NG	4.8 mm	34.5 mm	188.0 mm	170.0 mm	82.7 mm
HID-PV C 50 /I CDM 220-240V 50/60Hz	4.8 mm	34.5 mm	188.0 mm	170.0 mm	82.7 mm
HID-PV C 70 /I CDM 220-240V 50/60Hz NG	4.8 mm	34.5 mm	188.0 mm	170.0 mm	82.7 mm

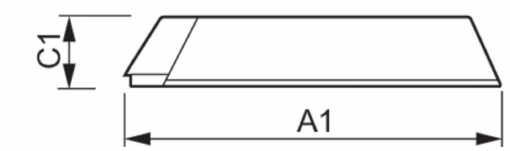

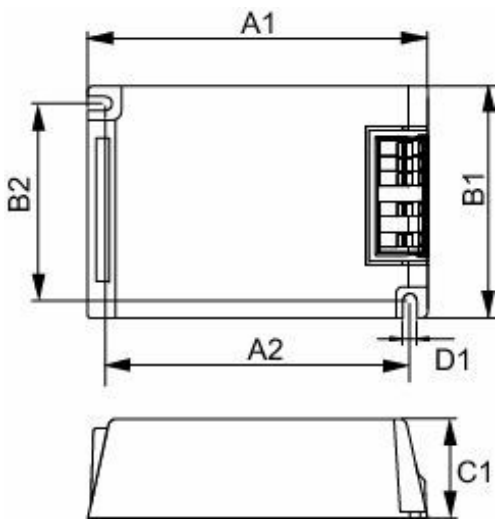

Product	D1	C1	A1	A2	B1	
HID-PV C 35 /S CDM 220-240V 50/60Hz NG	4.9 mm	32.2 mm	109.6 mm	98.5 mm	74.4 mm	63.7 mm
HID-PV C 50 /S CDM 220-240V 50/60Hz	4.9 mm	32.2 mm	109.6 mm	98.5 mm	74.4 mm	
HID-PV C 70 /S CDM 220-240V 50/60Hz NG	4.9 mm	32.2 mm	109.6 mm	98.5 mm	74.4 mm	63.7 mm

Product details

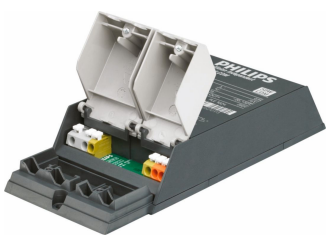

HID-PV C 50 /I



HID-PV C 50 /S

Operating and Electrical

Input Voltage	220 to 240 V
Line Frequency	50 to 60 Hz
Input Frequency	50 to 60 Hz

Operating and Electrical

Order Code	Full Product Name	Number of Products on MCB (16A Type B) (Nom)
913700665166	HID-PV C 50 /I CDM 220-240V 50/60Hz	24
913700653166	HID-PV C 35 /I CDM 220-240V 50/60Hz NG	24
913700653266	HID-PV C 70 /I CDM 220-240V 50/60Hz NG	20
913700652766	HID-PV C 35 /S CDM 220-240V 50/60Hz NG	24
913700652966	HID-PV C 70 /S CDM 220-240V 50/60Hz NG	20
913700664966	HID-PV C 50 /S CDM 220-240V 50/60Hz	24

Mechanical and Housing

Order Code	Full Product Name	Housing
913700665166	HID-PV C 50 /I CDM 220-240V 50/60Hz	/I
913700653166	HID-PV C 35 /I CDM 220-240V 50/60Hz NG	/I
913700653266	HID-PV C 70 /I CDM 220-240V 50/60Hz NG	/I
913700652766	HID-PV C 35 /S CDM 220-240V 50/60Hz NG	/S
913700652966	HID-PV C 70 /S CDM 220-240V 50/60Hz NG	/S
913700664966	HID-PV C 50 /S CDM 220-240V 50/60Hz	/S

© 2026 Signify Holding. All rights reserved. The information provided herein is subject to change, without notice. Signify does not give any representation or warranty as to the accuracy or completeness of the information included herein and shall not be liable for any action in reliance thereon. The information presented in this document is not intended as any commercial offer and does not form part of any quotation or contract, unless otherwise agreed by Signify. Philips and the Philips Shield Emblem are registered trademarks of Koninklijke Philips N.V.