PHILIPS

TL-E LIFEMAX Standard Colours

TLELSTDC



Circular shaped, basic fluorescent lighting

This circular TL lamp (tube diameter 29 mm) enables omni-directional light distribution. It is suitable for use in a wide range of luminaires for various purposes where color rendering is not important.

Benefits

- Standard colours with moderate colour rendering (R a 50 - 70)
- Create atmospheres from warm white to cool daylight

Applications

- Suitable for use in a wide range of luminaires for various purposes, including many decorative luminaires
- Ideal for `human' applications such as schools, offices, shops, theatres etc. where colour rendering is not an important factor

Features

- Available in varying colour designations
- Symmetrical, omni-directional light distribution

Versions



30 W G10q Cool daylight
Circular fluorescent - RFT

Dimensional drawing

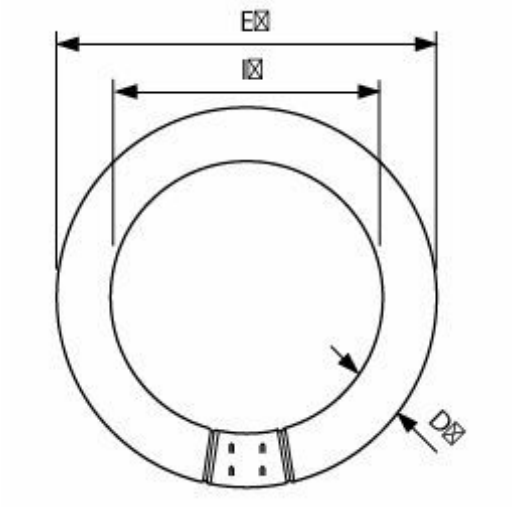

Product	D (max)	D (min)	E (min)	E (max)	I (min)	I (max)
22 W G10q Cool daylight Circular fluorescent	30.9 mm	26.2 mm	205.0 mm	213.5 mm	149.1 mm	155.6 mm
32 W G10q Cool daylight Circular fluorescent	30.9 mm	27.1 mm	299.0 mm	303.5 mm	241.0 mm	246.0 mm
40 W G10q Cool daylight Circular fluorescent	30.9 mm	27.1 mm	393.7 mm	406.4 mm	341.0 mm	347.7 mm

General Information

Cap-Base	G10q
Nominal lifetime	8,000 hour(s)

Light Technical

Color Designation	Cool Daylight
Correlated Color Temperature (Nom)	6200 K
Color rendering index (CRI)	72

Controls and Dimming

Dimmable	Yes

Mechanical and Housing

Bulb Shape	C-T29

Approval and Application

Mercury (Hg) Content (Nom)	9 mg

Light Technical

Order Code	Full Product Name	Luminous Flux	Luminous Efficacy (rated) (Nom)
928026205436	22 W G10q Cool daylight Circular fluorescent	1,050 lm	48 lm/W
928026305436	32 W G10q Cool daylight Circular fluorescent	1,750 lm	57 lm/W
928027405436	40 W G10q Cool daylight Circular fluorescent	2,500 lm	62 lm/W

Operating and Electrical

Order Code	Full Product Name	Power Consumption	Lamp Current (Nom)	Voltage (Nom)
928026205436	22 W G10q Cool daylight Circular fluorescent	22.0 W	0.400 A	62 V
928026305436	32 W G10q Cool daylight Circular fluorescent	32.0 W	0.450 A	81 V
928027405436	40 W G10q Cool daylight Circular fluorescent	40.0 W	0.420 A	110 V

© 2026 Signify Holding. All rights reserved. The information provided herein is subject to change, without notice. Signify does not give any representation or warranty as to the accuracy or completeness of the information included herein and shall not be liable for any action in reliance thereon. The information presented in this document is not intended as any commercial offer and does not form part of any quotation or contract, unless otherwise agreed by Signify. Philips and the Philips Shield Emblem are registered trademarks of Koninklijke Philips N.V.