PHILIPS

WL200V 32S/830_840
PSED D300

911401854288



Multi ColorTemp

CoreLine Slim Wall-mounted, All-in, 24 W, D300 mm, 3000 lm, 3200 lm, 3000 K, 4000 K, DALI, IP54, EL-DC

D300 mm, Polycarbonate, White, Wall, Power supply unit with DALI interface, DC compatible for central emergency lighting (integrated), All-in, Multi Color Temperature, 3000 lm, 3200 lm, 24 W, 132 lm/W, 125 lm/W, 3000 K, 4000 K, (0.43,0.40);(0.38,0.38) SDCM<3, Symmetrical, Opal, Polycarbonate, IP54 | Dust accumulation-protected, splash-proof, IK08 | 6 J, Safety class II, 2 Push-in connector 5-pole, DC operated central emergency lighting

General Information

Number of gear units	1 unit
Driver included	Yes
Sustainability rating	Unclassified
Service tag	No
Value ladder	Performance
Warranty period	5 years

Light Technical

Luminous Flux	3,000 lm
Correlated Color Temperature (Nom)	3000 K
Luminous Efficacy (rated) (Nom)	132 lm/W
Color rendering index (CRI)	>80
Light source color	Multi Color Temperature
Optic type	Symmetrical
Luminaire light beam spread	115°
All-in Type	All-in, Multi Color Temperature

Operating and Electrical

Input Voltage	220 to 240 V
Line Frequency	50 or 60 Hz
Inrush current	9 A
Inrush time	0.022 ms
Power Consumption	24 W
Power Factor (Fraction)	0.90
Connection	2 Push-in connector 5-pole
Cable	-
Number of products on MCB of 16 A type B	34
Suitable for random switching	Yes
Protection class IEC	Safety class II

Controls and Dimming

Dimmable	Yes
Driver/power unit/transformer	Power supply unit with DALI interface, DC compatible for central emergency lighting (integrated)
Control interface	DALI
Constant light output	No
DALI Standard	DALI-2™

Mechanical and Housing

Housing Material	Polycarbonate
Reflector material	-
Optic material	Polycarbonate
Optical cover material	Polycarbonate
Fixation material	-
Housing Color	White
Optical cover finish	Opal
Overall height	57 mm
Overall diameter	300 mm
Ingress protection code	IP54 [Dust accumulation-protected, splash-proof]
Mech. impact protection code	IK08 [6 J]
Mounting	Wall
Net Weight (Piece)	0.960 kg

Emergency Operation

Central Emergency	Yes
Emergency lighting	DC operated central emergency lighting

Approval and Application

Glow-wire test	Temperature 650 °C, duration 30 s
Flammability mark	For mounting on normally flammable surfaces
CE mark	Yes
ENEC mark	ENEC mark
EU RoHS compliant	Yes
Performance ambient temperature Tq	25 °C
Ambient temperature range	-20 to +40 °C

Initial Performance (IEC Compliant)

Luminous flux tolerance	-10% / +10%
Initial chromaticity	(0.43,0.40);(0.38,0.38) SDCM<3
Power consumption tolerance	+/-10%

Over Time Performance (IEC Compliant)

Control gear failure rate at median useful life 50000 h	5 %
Control gear failure rate at median useful life 100000 h	5 %
Lumen maintenance (EN-IEC 62722-2-1) at median useful life* 50000 h	L90
Lumen maintenance (EN-IEC 62722-2-1) at median useful life* 100000 h	L80

Sustainability Data

Repair class	Repair Class D, this product is not designed to be repaired.
Embedded carbon (A1-A3)	10.5 kg CO_2e
Product non-virgin material ratio	4.91 %
Recyclable content ratio of the finished product	6.72 %
GWP total B6 (kg CO2eq) Declared Unit	Please calculate using your local energy mix value: Power Declared Unit (kW) * Service life (hrs) Declared Unit * Energy mix (kg CO2eq / kwh)
GWP total B6 (kg CO2eq) Functional Unit	Please calculate using your local energy mix value: Power Declared Unit (kW) * 1000 (lm) /lumen output (lm) Declared Unit * 35000 (hrs) * Energy mix (kg CO2 eq / kwh)
Non-virgin material ratio of the packaging	Cardboard > 80% recycled
Packaging Recyclable content ratio	Cardboard recycling rate > 80%
Packaging Material	Cardboard

Dimensional drawing

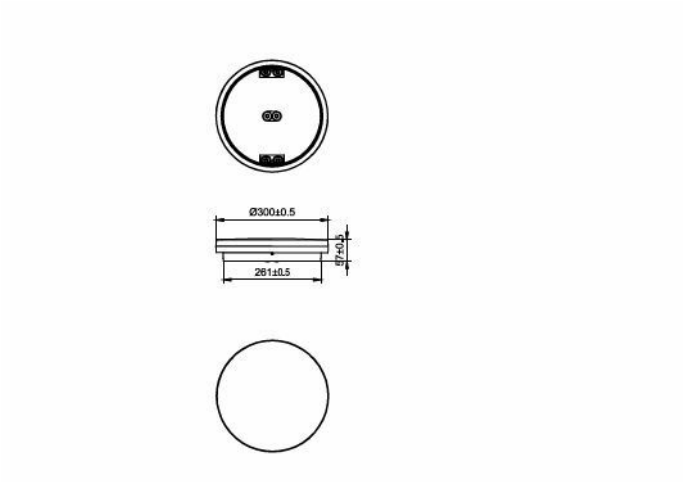

Product Data

Order product name	WL200V 32S/830_840 PSED D300
Full product name	WL200V 32S/830_840 PSED D300
Full product code	872110333927099
Order code	911401854288
Material Nr. (12NC)	911401854288
Numerator - Quantity Per Pack	1
EAN/UPC - Product/Case	8721103339270
Numerator - Packs per outer box	8
EAN/UPC - Case	8721103339362

Polar normal diagrams

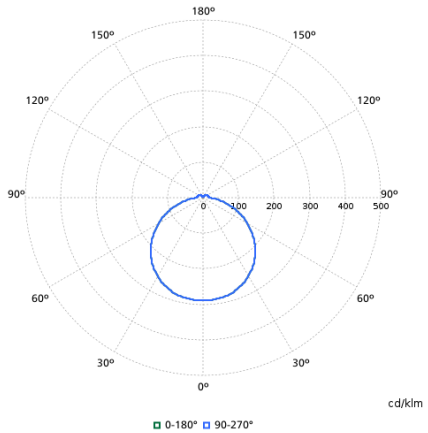

Related Documents

Documents and certificates	Document Name	Download
Installation Instructions	Installation-Instructions-CoreLine-Slim-Wall-mounted-WL200V.pdf	Download
Environmental Product Declaration	EPD-HUB-EPD-PHILIPS-CoreLine-slim-wall-mounted-WL200V-Ref-911401853688.pdf	Download

Photometry and lighting design	Document Name	Download
IES File	wl200v-32s-830-840-psed-d300-911401854288.ies	Download
LDT File	wl200v-32s-830-840-psed-d300-911401854288.ldt	Download
ROLF File	wl200v-32s-830-840-psed-d300-911401854288.rolfz	Download
ULD File	wl200v-32s-830-840-psed-d300-911401854288.uld	Download

© 2026 Signify Holding. All rights reserved. The information provided herein is subject to change, without notice. Signify does not give any representation or warranty as to the accuracy or completeness of the information included herein and shall not be liable for any action in reliance thereon. The information presented in this document is not intended as any commercial offer and does not form part of any quotation or contract, unless otherwise agreed by Signify. Philips and the Philips Shield Emblem are registered trademarks of Koninklijke Philips N.V.