PHILIPS

SP570P LED52S 4000 PSD W12L240 OD SI

919515814810

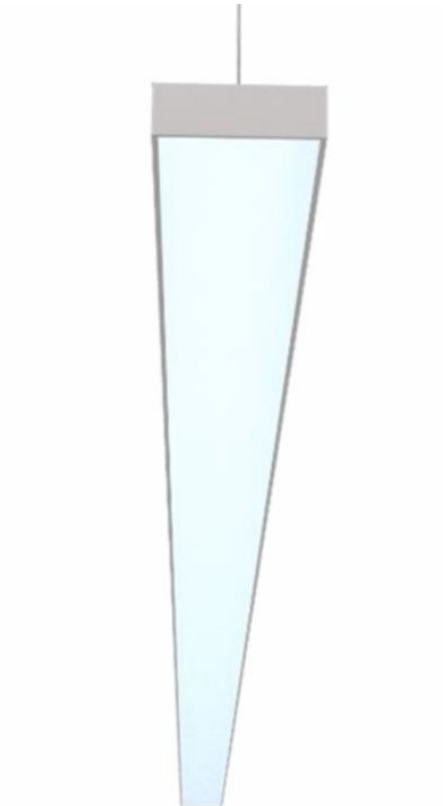

BOLD and Sleek: A humble profile with minimal bezel

The Falt line family of luminaires gives you compromise-free office illumination with the sleek bar profile. It is a perfect solution for office application and general indoor area lighting . The range brings together high-flux lighting with a homogeneous optical system without making any concessions on energy efficiency design

Warnings and Safety

- Meant for Indoor Application Only. Should not be used in outdoor environment.

General Information

Driver included	Yes
Light source engine type	LED
Warranty period	1 years

Light Technical

Upward light output ratio	0
Luminous Flux	5,200 lm
Correlated Color Temperature (Nom)	6500 K
Luminous Efficacy (rated) (Nom)	120 lm/W

Color rendering index (CRI)	>80
Beam angle of light source	- degree(s)
Light source color	840 neutral white
Optic type	-
Luminaire light beam spread	-

Operating and Electrical

Input Voltage	220 to 240 V
Line Frequency	50 Hz
Power Consumption	22 W
Power Factor (Fraction)	0.95
Voltage (Nom)	120-277, 347 V
UL Type	TLED_Type A; UL listed HF
Protection class IEC	Safety class I
Surge Protection (Common/ Differential)	Surge protection level until 4 kV differential mode and 4 kV common mode

Controls and Dimming

Dimmable	Yes
Control interface	DALI

Mechanical and Housing

Housing Material	Aluminum extruded
Optic material	Polycarbonate
Optical cover material	Polycarbonate
Housing Color	Silver
Mounting device	Suspension set simple, standard
Optical cover shape	-
Overall length	2,380 mm
Overall width	120 mm
Overall height	33 mm
Dimensions (Height x Width x Depth)	33 x 120 x 2380 mm
Material	Aluminum
Ingress protection code	IP20 [Finger-protected]
Mech. impact protection code	IK02 [0.2 J standard]
Optical cover type	Opal diffuser in polycarbonate cover
Net Weight (Piece)	5.400 kg

Approval and Application

Flammability mark	For mounting on normally flammable surfaces
Ambient temperature range	0 to +45 °C

Initial Performance (IEC Compliant)

Initial chromaticity	<5
Power consumption tolerance	+/-10%

Over Time Performance (IEC Compliant)

Median useful life L70B50	50,000 hour(s)

Product Data

Order product name	SP570P LED52S 4000 PSD W12L240 OD SI
Full product name	SP570P LED52S 4000 PSD W12L240 OD SI
Order code	919515814810
Material Nr. (12NC)	919515814810
Numerator - Quantity Per Pack	1
Numerator - Packs per outer box	4

Dimensional drawing

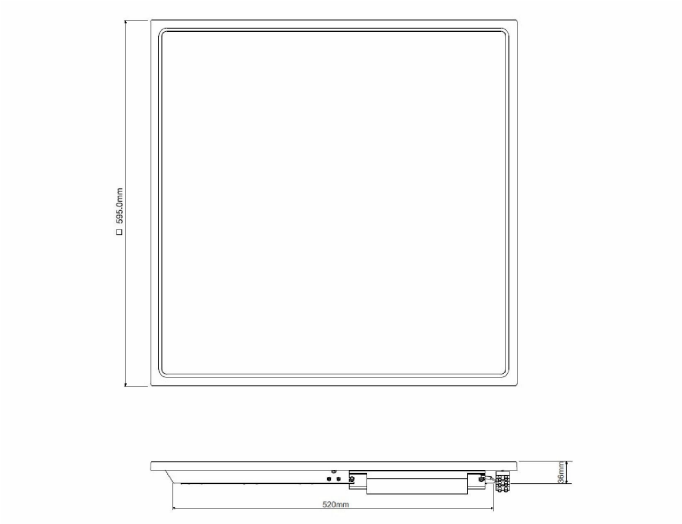

Related Documents

Documents and certificates	Document Name	Download
Installation Instructions	Flat Line_SP570-1_WH_1-INI.pdf	Download

© 2026 Signify Holding. All rights reserved. The information provided herein is subject to change, without notice. Signify does not give any representation or warranty as to the accuracy or completeness of the information included herein and shall not be liable for any action in reliance thereon. The information presented in this document is not intended as any commercial offer and does not form part of any quotation or contract, unless otherwise agreed by Signify. Philips and the Philips Shield Emblem are registered trademarks of Koninklijke Philips N.V.