PHILIPS

SmartBright Direct-lit Panel RC048

RC048_G3



More Reliable, More Professional. The most affordable LED solution for office.

The Philips SmartBright range is comprised of a selection of essential LED luminaires that come with Philips high levels of quality at a competitive price. Reliable, energy efficient and affordable lighting solutions that you can count on to deliver what they promise. Philips SmartBright Panels are our most affordable LED solution. The complete product family is available in multiple mounting types, product dimensions and lumen options to suit the widest range of applications. And thanks to the direct-lit structure, SmartBright panels deliver both higher system efficacy and excellent lighting uniformity. The essential range of LED panels for everyday installations.

Benefits

- No risks, trusted performance
- Philips quality and reliability
- Comfortable light
- Usage flexibility

Applications

- Offices
- Hospitals and Care Centers
- Retail

Features

- 4000 lumen choice
- Long lifetime of 30,000 hours @L70
- Energy efficient 105 lm/W
- Flicker free, RG0, CRI 80
- Suits for recessed, surface and suspension application

Versions



RC048 G3 standard -30120

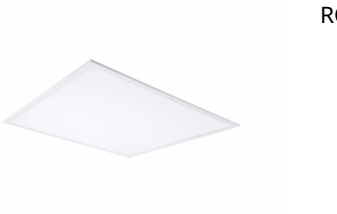

RC048 G3 standard -6060



RC048 G3 standard -6060-MR



RC048 G3 standard -30120-MR

Dimensional drawing

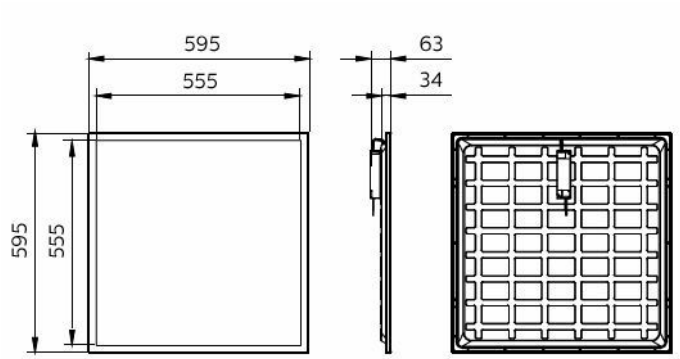

RC048B LED40S/840 PSU W60L60 GM G3

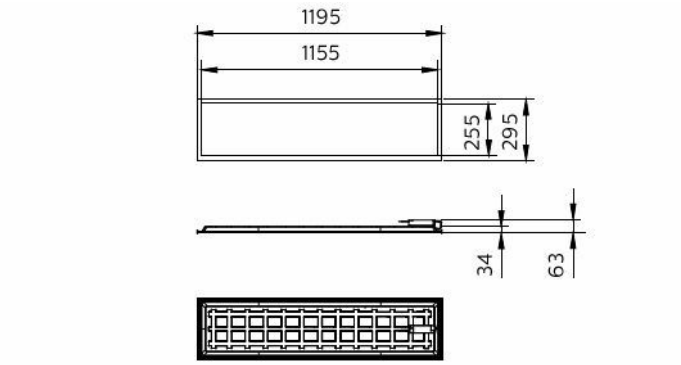

RC048B LED40S/840 PSU W30L120 GM G3

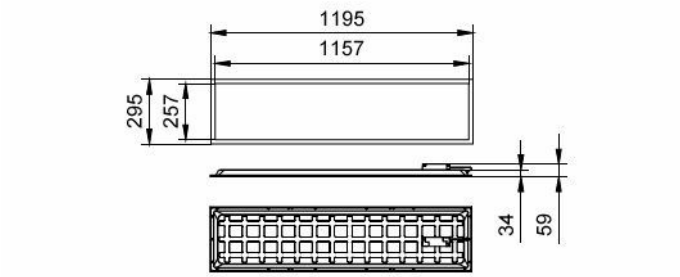

RC048B LED40S/840 PSU W30L120 PCV MR

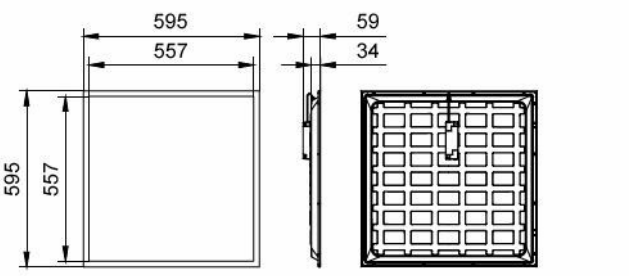

RC048B LED40S/865 PSU W60L60 PCV MR

Product details



RC048 G3 Back -30120

RC048 G3 Front-6060-MR

RC048 G3 Back-6060-MR



RC048 G3 Back-6060



RC048 G3 Driver



RC048 G3 Back-30120-MR



RC048 G3 Front-30120-MR

Light Technical

Luminous Flux	4,000 lm
Luminous Efficacy (rated) (Nom)	105 lm/W
Color rendering index (CRI)	≥80

Operating and Electrical

Input Voltage	220 to 240 V
Line Frequency	50 or 60 Hz
Power Consumption	38 W
Protection class IEC	Safety class II

Controls and Dimming

Dimmable	No

Mechanical and Housing

Housing Color	White RAL 9003
Ingress protection code	IP20 [Finger-protected]
Mech. impact protection code	IK02 [0.2 J standard]
Optical cover type	Polymethyl methacrylate lens

Approval and Application

CE mark	No
Ambient temperature range	-10 to +40 °C

Light Technical

Order Code	Full Product Name	Correlated Color Temperature (Nom)
911401898787	RC048B LED40S/840 PSU W30L120 GM G3	4000 K
911401898887	RC048B LED40S/865 PSU W30L120 GM G3	6500 K
911401898587	RC048B LED40S/840 PSU W60L60 GM G3	4000 K
911401898687	RC048B LED40S/865 PSU W60L60 GM G3	6500 K
911401899387	RC048B LED40S/840 PSU W60L60 PCV MR	4000 K
911401899487	RC048B LED40S/865 PSU W60L60 PCV MR	6500 K
911401899587	RC048B LED40S/840 PSU W30L120 PCV MR	4000 K
911401899687	RC048B LED40S/865 PSU W30L120 PCV MR	6500 K

Initial Performance (IEC Compliant)

Order Code	Full Product Name	Luminous flux tolerance
911401898787	RC048B LED40S/840 PSU W30L120 GM G3	-10% / +10%
911401898887	RC048B LED40S/865 PSU W30L120 GM G3	-10% / +10%
911401898587	RC048B LED40S/840 PSU W60L60 GM G3	-10% / +10%
911401898687	RC048B LED40S/865 PSU W60L60 GM G3	-10% / +10%
911401899387	RC048B LED40S/840 PSU W60L60 PCV MR	-10%,+15%
911401899487	RC048B LED40S/865 PSU W60L60 PCV MR	-10%,+15%
911401899587	RC048B LED40S/840 PSU W30L120 PCV MR	-10%,+15%
911401899687	RC048B LED40S/865 PSU W30L120 PCV MR	-10%,+15%

© 2026 Signify Holding. All rights reserved. The information provided herein is subject to change, without notice. Signify does not give any representation or warranty as to the accuracy or completeness of the information included herein and shall not be liable for any action in reliance thereon. The information presented in this document is not intended as any commercial offer and does not form part of any quotation or contract, unless otherwise agreed by Signify. Philips and the Philips Shield Emblem are registered trademarks of Koninklijke Philips N.V.