PHILIPS

BVS211 LED104/840 80W 220-240V GC

911401902474

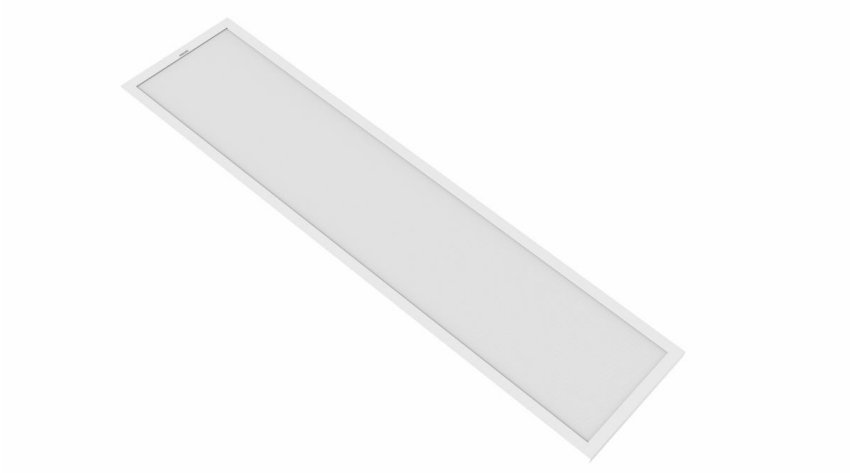

Bright Star BVS211/BVS221, 80 W, 10800 lm, 4000 K, Fixed Output

Philips Bright Star is a linear lighting solution designed specifically for indoor recreational sports venues, providing bright, anti-glare, and energy-efficient white light to enhance visibility and visual comfort for facilities such as badminton courts. Featuring a sleek, streamlined design, Bright Star provides clean, continuous illumination ideal for court lighting. Its one-piece stamped steel backplate guarantees structural strength, while the front optical design effectively controls glare in the direction of movement—perfectly balancing aesthetics and performance. With versatile installation options—including wall mount, suspension, and V-type dual-hanging adjustable-angle accessories—Bright Star offers flexible deployment to meet diverse lighting needs. This high-performance linear luminaire combines modern design, reliability, and superior lighting quality for an engaging indoor recreational sports experience.

General Information

Driver included	Yes
Light source engine type	LED

Light Technical

Luminous Flux	10,800 lm
Correlated Color Temperature (Nom)	4000 K
Luminous Efficacy (rated) (Nom)	135 lm/W
Color rendering index (CRI)	80
Beam angle of light source	90 degree(s)
Light source color	840 neutral white
Unified glare rating CEN	22

Operating and Electrical

Input Voltage	220-240 V
Line Frequency	50 to 60 Hz
Power Consumption	80 W
Power Factor (Fraction)	0.95
Connection	Flying leads/wires
Cable	Cable 1.0 m without plug
Number of products on MCB of 16 A type B	6
Protection class IEC	Safety class I

Controls and Dimming

Dimmable	No
Control interface	Fixed Output

Mechanical and Housing

Housing Material	Metal
Optical cover material	Polystyrene
Housing Color	White RAL 9003
Optical cover finish	Microprismatic lens
Ingress protection code	IP40 [Wire-protected]
Mech. impact protection code	IK03 [0.3 J]
Optical cover type	Microprismatic cover
Net Weight (Piece)	2.750 kg

Approval and Application

CE mark	No
Ambient temperature range	-20 to +45 °C

Initial Performance (IEC Compliant)

Luminous flux tolerance	+/-10%
Power consumption tolerance	+/-10%

Product Data

Order product name	BVS211 LED104/840 80W 220-240V GC
Full product name	BVS211 LED104/840 80W 220-240V GC
Order code	911401902474
Material Nr. (12NC)	911401902474
Numerator - Quantity Per Pack	1
EAN/UPC - Product/Case	6941970622707
Numerator - Packs per outer box	2
EAN/UPC - Case	6941970622707

Dimensional drawing

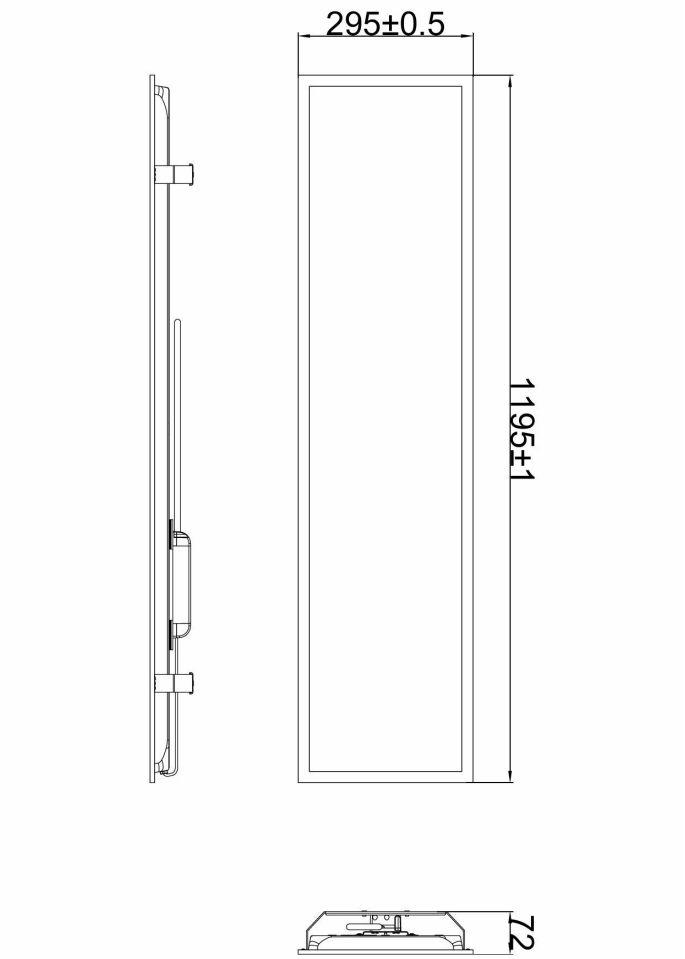

Related Documents

Photometry and lighting design	Document Name	Download
IES File	BVS211-LED104-840-80W-220-240V-GC.ies	Download

© 2026 Signify Holding. All rights reserved. The information provided herein is subject to change, without notice. Signify does not give any representation or warranty as to the accuracy or completeness of the information included herein and shall not be liable for any action in reliance thereon. The information presented in this document is not intended as any commercial offer and does not form part of any quotation or contract, unless otherwise agreed by Signify. Philips and the Philips Shield Emblem are registered trademarks of Koninklijke Philips N.V.