PHILIPS

CR350B LED60S/940 PSU W60L60

912401483360



Service tag

Cleanroom CR350B, ISO 14644-1 Air cleanness Class 1, 60 W, 600x600 mm, 6000 lm, 4000 K, CRI>90, UGR19

ISO 14644-1 Air cleanness Class 1, 600x600 mm, Steel, White, Traffic white (RAL9016), Power supply unit (On/Off), 6000 lm, 60 W, 100 lm/W, 4000 K, (0.39, 0.38) SDCM <3, CRI>90, UGR19, Wide beam, Clear, Glass, IP65 | Dust penetration-protected, jet-proof, IK09 | 10 J, Safety class I, Push-in connector 3-pole

General Information

Light source replaceable	Yes
Number of gear units	1 unit
Driver included	Yes
Sustainability rating	Unclassified
Service tag	Yes
Lighting Technology	LED
Value ladder	Specification
Warranty period	5 years

Light Technical

Luminous Flux	6,000 lm
Saturated Red (R9)	>50
Correlated Color Temperature (Nom)	4000 K
Luminous Efficacy (rated) (Nom)	100 lm/W
Color rendering index (CRI)	>90
Beam angle of light source	120 degree(s)
Light source color	940 neutral white
Optic type	Wide beam
Luminaire light beam spread	80° x 80°
Unified glare rating CEN	19

Operating and Electrical

Input Voltage	220 to 240 V
Line Frequency	50 to 60 Hz
Average CLO power consumption	- W
Inrush current	20 A
Inrush time	240 ms
Power Consumption	60 W
Power Factor (Fraction)	0.9
Connection	Push-in connector 3-pole
Cable	-
Number of products on MCB of 16 A type B	24
Suitable for random switching	Yes
Protection class IEC	Safety class I
Total harmonic distortion	6 %

Controls and Dimming

Dimmable	No
Driver/power unit/transformer	Power supply unit (On/Off)
Control interface	-
Constant light output	No
Maximum dim level	Not applicable

Mechanical and Housing

Housing Material	Steel
Reflector material	-
Optic material	Polystyrene
Optical cover material	Glass
Fixation material	-
Housing Color	White
Optical cover finish	Clear
Overall length	595 mm
Overall width	595 mm
Overall height	90 mm
Dimensions (Height x Width x Depth)	90 x 595 x 595 mm
Ingress protection code	IP65 [Dust penetration-protected, jet-proof]
Mech. impact protection code	IK09 [10 J]
Net Weight (Piece)	7.300 kg

Approval and Application

Glow-wire test	Temperature 650 °C, duration 30 s
Flammability mark	For mounting on normally flammable surfaces
CE mark	Yes
ENEC mark	ENEC mark
Photobiological risk	Photobiological risk group 0 @200mm to EN62778
EU RoHS compliant	Yes
Performance ambient temperature Tq	25 °C
Ambient temperature range	-20 to +35 °C

Initial Performance (IEC Compliant)

Luminous flux tolerance	+/-10%
Initial chromaticity	(0.39, 0.38) SDCM <3
Power consumption tolerance	+/-10%
Standard Deviation of Colour Matching (McAdam ellipse)	SDCM≤3

Over Time Performance (IEC Compliant)

Control gear failure rate at median useful life 50000 h	5 %
Lumen maintenance (EN-IEC 62722-2-1) at median useful life* 100000 h	L80

Sustainability Data

Repair class	Repair Class B, the driver and light source of this luminaire can be replaced by a service technician. Parts and documentation are available for an extended period of time.
Non-virgin material ratio of the packaging	Cardboard > 80% recycled
Packaging Recyclable content ratio	Cardboard recycling rate > 80%
Packaging Material	Cardboard

Product Data

Order product name	CR350B LED60S/940 PSU W60L60
Full product name	CR350B LED60S/940 PSU W60L60
Full product code	871869979713300
Order code	912401483360

Material Nr. (12NC)	912401483360
Numerator - Quantity Per Pack	1
EAN/UPC - Product/Case	8718699797133
Numerator - Packs per outer box	1
EAN/UPC - Case	8718699797133

Dimensional drawing

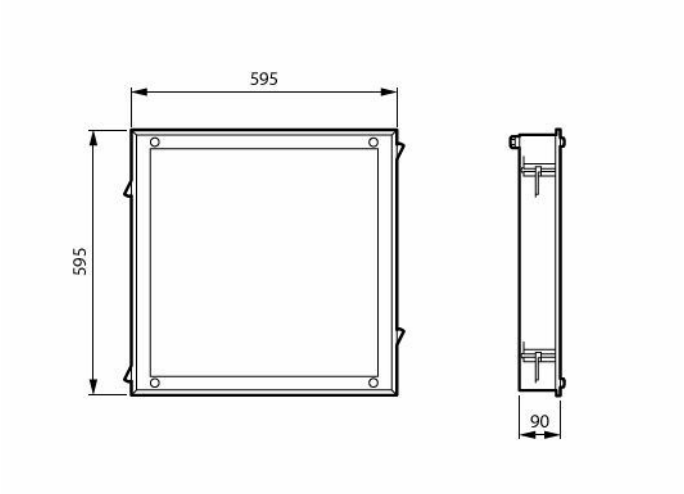

Polar normal diagrams

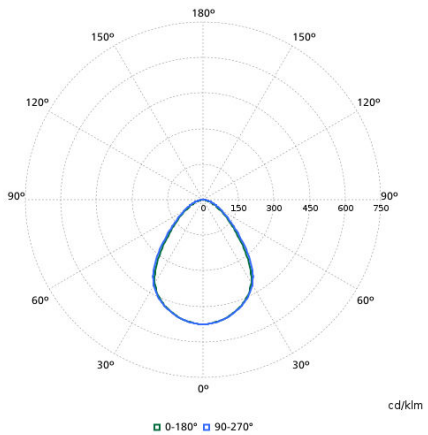

Related Documents

Documents and certificates	Document Name	Download
Installation Instructions	2022-03-17_MI Cleanroom CR350B_352B.pdf	Download

Photometry and lighting design	Document Name	Download
IES File	cr350b-led60s-940-psu-w60l60-912401483360.ies	Download
LDT File	cr350b-led60s-940-psu-w60l60-912401483360.ldt	Download
ROLF File	cr350b-led60s-940-psu-w60l60-912401483360.rolfz	Download
ULD File	cr350b-led60s-940-psu-w60l60-912401483360.uld	Download

© 2026 Signify Holding. All rights reserved. The information provided herein is subject to change, without notice. Signify does not give any representation or warranty as to the accuracy or completeness of the information included herein and shall not be liable for any action in reliance thereon. The information presented in this document is not intended as any commercial offer and does not form part of any quotation or contract, unless otherwise agreed by Signify. Philips and the Philips Shield Emblem are registered trademarks of Koninklijke Philips N.V.