PHILIPS

BY325P LED195S CW PSU GR FG WB XTFCL V1

919515812642



An Energy efficient Well Glass for Industrial and commercial application

Philips DuraLED Highbay is a functional lighting by combining cost-efficiency with clean design. Following the success of Maxolid family, DuraLED Highbay comes as a big surprise gift for industrial Highbay lighting solution with desirable preposition that offers customers all the benefits of LED lighting – fresh light quality, longer service lifetime, reduced energy consumption and less maintenance – from a trusted manufacturer. At the same time, it delivers clear benefits for the installer too. The luminaire can be installed on the existing grid. Electrical connection is straightforward: there is no need to open the luminaire for installation. DuraLED Highbay is a perfect LED replacement for HPI 250/400W luminaires, allowing you to bright up your warehouses, assembly lines, supermarkets, and sports recreational spaces in a smarter way. This highbay improves the total cost of ownership and provides optionally DALI dimming for even further savings.

Warnings and Safety

- Meant for use in Indoor Industrial environment only

General Information

Driver included	Yes
Light source engine type	LED
Warranty period	2 years

Light Technical

Luminous Flux	20,000 lm
Correlated Color Temperature (Nom)	6500 K
Luminous Efficacy (rated) (Nom)	125 lm/W
Color rendering index (CRI)	>80
Beam angle of light source	55 degree(s)
Light source color	865 cool daylight
Optic type	Beam angle 110°
Luminaire light beam spread	110°

Operating and Electrical

Input Voltage	120 to 277 V
Line Frequency	50 Hz
Power Consumption	160 W
Power Factor (Fraction)	0.95
Protection class IEC	Safety class I
Surge Protection (Common/ Differential)	Surge protection level until 4 kV

Controls and Dimming

Dimmable	No
Control interface	-

Mechanical and Housing

Housing Material	Aluminum die cast
Optic material	Polycarbonate
Optical cover material	Polycarbonate
Housing Color	Gray
Mounting device	Eye-Bolt
Optical cover shape	Wide
Material	Aluminum
Ingress protection code	IP66 [Dust penetration-protected, jet-proof]
Mech. impact protection code	IK08 [5 J vandal-protected]
Optical cover type	Tempered glass
Net Weight (Piece)	5.400 kg

Approval and Application

Flammability mark	For mounting on normally flammable surfaces
Ambient temperature range	0 to +45 °C

Initial Performance (IEC Compliant)

Initial chromaticity	<5
Power consumption tolerance	+/-10%

Over Time Performance (IEC Compliant)

Median useful life L70B50	50,000 hour(s)

Product Data

Order product name	BY325P LED195S CW PSU GR FG WB XTFCL V1
Full product name	BY325P LED195S CW PSU GR FG WB XTFCL V1
Order code	919515812642
Material Nr. (12NC)	919515812642
Numerator - Quantity Per Pack	1
Numerator - Packs per outer box	1

Dimensional drawing

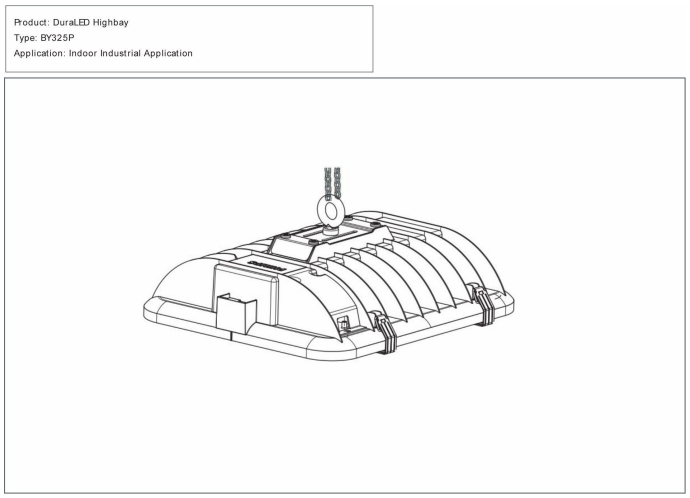

Related Documents

Documents and certificates	Document Name	Download
Installation Instructions	DuraLED_Highbay-BY325P-INI.pdf	Download

Photometry and lighting design	Document Name	Download
IES File	DuraLED Highbay_BY325P LED195S CW PSU GR FG WB XTFCL V1.IES	Download

© 2026 Signify Holding. All rights reserved. The information provided herein is subject to change, without notice. Signify does not give any representation or warranty as to the accuracy or completeness of the information included herein and shall not be liable for any action in reliance thereon. The information presented in this document is not intended as any commercial offer and does not form part of any quotation or contract, unless otherwise agreed by Signify. Philips and the Philips Shield Emblem are registered trademarks of Koninklijke Philips N.V.