PHILIPS

MASTERColour CDM-R111

DCDMR111



Beautiful sparkle, trendy design

The MASTERColour CDM-R111 combines the trendy look of 111 mm aluminum reflector halogen lamps with the long life, high energy efficiency and crisp white light of MASTERColour CDM.

Benefits

- Low operating costs
- Easy installation
- Relatively low heat output
- Less glare, comfort for shoppers and staff
- Reduced risk of fading

Applications

- Accent and decorative lighting: display lighting with sparkling, theatrical effects, even in surroundings with very high background ambient light levels like shop windows
- General lighting: in downlighters, a warm and comfortable atmosphere can be created

Features

- High lamp efficacy
- Long lifetime compared to incandescent and halogen lamps
- The ceramic discharge tube is optimally and stably positioned in the reflector
- Twist & Lock system
- UV-Block burner capsule
- Anti-glare cap design

- Control gear must include end-of-life protection (IEC61167, IEC 62035)
- Use only with electronic control gear. 35W/830 lamps may also use electromagnetic gear.
- A lamp breaking is extremely unlikely to have any impact on your health. If a lamp breaks, ventilate the room for 30 minutes and remove the parts, preferably with gloves. Put them in a sealed plastic bag and take it to your local waste facilities for recycling. Do not use a vacuum cleaner.

Versions



LPPR CDM-R111 24D 40D

Dimensional drawing

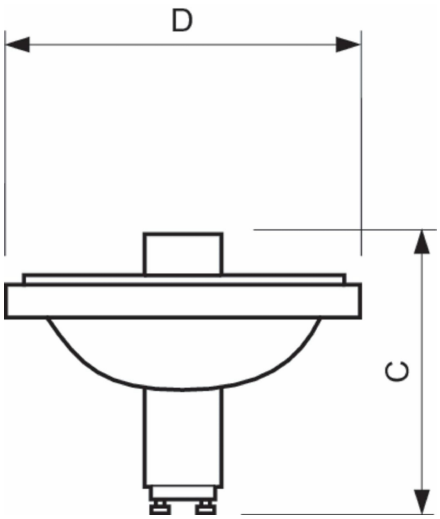

Product	D (max)	C (max)
MASTERC CDM-R111 35W/942 GX8.5 24D 1CT	111 mm	95 mm

General Information

Cap-Base	GX8.5
Operating Position	UNIVERSAL [Any or Universal (U)]
Switching Cycle	800

Light Technical

Beam Angle (Nom)	24 degree(s)
Luminous Flux	1,300 lm
Luminous Intensity (Nom)	7,350 cd
Color Designation	Cool White (CW)
Chromaticity Coordinate X (Nom)	0.371
Chromaticity Coordinate Y (Nom)	0.366
Correlated Color Temperature (Nom)	4200 K
Color rendering index (CRI)	93
LLMF At End Of Nominal Lifetime (Nom)	65 %

Operating and Electrical

Power Consumption	39.1 W
Warm-up time to 60% light	120 s
Voltage (Nom)	86 V

Controls and Dimming

Dimmable	No

Mechanical and Housing

Bulb Finish	Reflector
Bulb Shape	R111

Approval and Application

Mercury (Hg) Content (Max)	2.8 mg
Mercury (Hg) Content (Nom)	3.0 mg
Energy Consumption kWh/1000 h	40 kWh

© 2026 Signify Holding. All rights reserved. The information provided herein is subject to change, without notice. Signify does not give any representation or warranty as to the accuracy or completeness of the information included herein and shall not be liable for any action in reliance thereon. The information presented in this document is not intended as any commercial offer and does not form part of any quotation or contract, unless otherwise agreed by Signify. Philips and the Philips Shield Emblem are registered trademarks of Koninklijke Philips N.V.