PHILIPS

SM136V G4 43S/840 WIA W20L120 OC

911401842187



signify interact

CoreLine surface mounted gen 4, 27.5 W, 1200x200 mm, 4300 lm, 4000 K, Wireless, Interact Ready, UGR19

1200x200 mm, Steel, White, Signal white (RAL9003), Surface, Wireless driver Interact System ready, 4300 lm, 27.5 W, 156 lm/W, 4000 K, (0.38.0.38)SDCM<3, UGR19, Wide beam office compliant, Microprismatic lens, Polycarbonate, IP20/44 | Finger-protected; wire-protected, splash-proof, IK03 | 0.35 J reinforced, Safety class II, Cable with connector 3-pole, Push-in connector 3-pole

General Information

Number of gear units	1 unit
Driver included	Yes
Sustainability rating	Unclassified
Service tag	No
Value ladder	Performance
Warranty period	5 years

Light Technical

Luminous Flux	4,300 lm
Correlated Color Temperature (Nom)	4000 K
Luminous Efficacy (rated) (Nom)	156 lm/W
Color rendering index (CRI)	>80
Light source color	840 neutral white
Optic type	Wide beam office compliant
Luminaire light beam spread	80°
Unified glare rating CEN	19

Operating and Electrical

Input Voltage	220-240 V
Line Frequency	50 or 60 Hz
Inrush current	4.9 A
Inrush time	0.056 ms
Power Consumption	27.5 W
Power Factor (Fraction)	0.9
Connection	Push-in connector 3-pole
Cable	Cable with connector 3-pole
Number of products on MCB of 16 A type B	24
Suitable for random switching	Yes
Protection class IEC	Safety class II

Controls and Dimming

Dimmable	Yes
Driver/power unit/transformer	Wireless driver Interact System ready
Control interface	Wireless
Constant light output	No
Connectivity	Interact Ready

Mechanical and Housing

Housing Material	Steel
Reflector material	Steel
Optic material	Polycarbonate
Optical cover material	Polycarbonate
Fixation material	-
Housing Color	White
Optical cover finish	Microprismatic lens
Overall length	1,200 mm
Overall width	200 mm
Overall height	53 mm
Dimensions (Height x Width x Depth)	53 x 200 x 1200 mm
Ingress protection code	IP20/44 [Finger-protected; wire-protected, splash-proof]
Mech. impact protection code	IK03 [0.35 J reinforced]
Mounting	Surface
Net Weight (Piece)	3.590 kg

Approval and Application

Glow-wire test	Temperature 650 °C, duration 30 s
Flammability mark	For mounting on normally flammable surfaces
CE mark	Yes
ENEC mark	ENEC mark
Photobiological risk	Photobiological risk group 0 @200mm to EN62778
EU RoHS compliant	Yes
Performance ambient temperature Tq	25 °C
Ambient temperature range	-10 to +40 °C

Initial Performance (IEC Compliant)

Luminous flux tolerance	+/-10%
Initial chromaticity	(0.38.0.38)SDCM<3
Power consumption tolerance	+/-10%

Over Time Performance (IEC Compliant)

Control gear failure rate at median useful life 50000 h	5 %
Lumen maintenance (EN-IEC 62722-2-1) at median useful life* 50000 h	L90
Lumen maintenance (EN-IEC 62722-2-1) at median useful life* 100000 h	L80

Sustainability Data

Repair class	Repair Class D, this product is not designed to be repaired.
Embedded carbon (A1-A3)	30.4 kg CO_2e
Product non-virgin material ratio	24.5 %
Recyclable content ratio of the finished product	71.2 %
GWP total B6 (kg CO2eq) Declared Unit	Please calculate using your local energy mix value: Power Declared Unit (kW) * Service life (hrs) Declared Unit * Energy mix (kg CO2eq / kwh)
GWP total B6 (kg CO2eq) Functional Unit	Please calculate using your local energy mix value: Power Declared Unit (kW) * 1000 (lm) /lumen output (lm) Declared Unit * 35000 (hrs) * Energy mix (kg CO2 eq / kwh)
Non-virgin material ratio of the packaging	Cardboard > 80% recycled
Packaging Recyclable content ratio	Cardboard recycling rate > 80%
Packaging Material	Cardboard

Product Data

Order product name	SM136V G4 43S/840 WIA W20L120 OC
Full product name	SM136V G4 43S/840 WIA W20L120 OC
Full product code	872016976426299
Order code	911401842187
Material Nr. (12NC)	911401842187
Numerator - Quantity Per Pack	1
EAN/UPC - Product/Case	8720169764262
Numerator - Packs per outer box	4
EAN/UPC - Case	8720169764545

Dimensional drawing

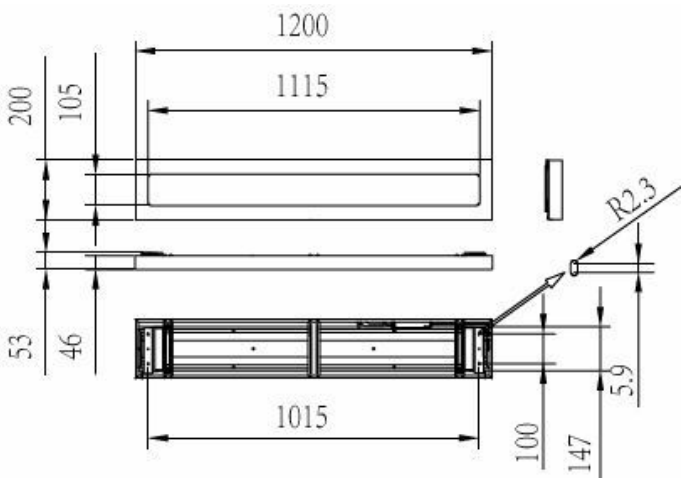

Polar normal diagrams

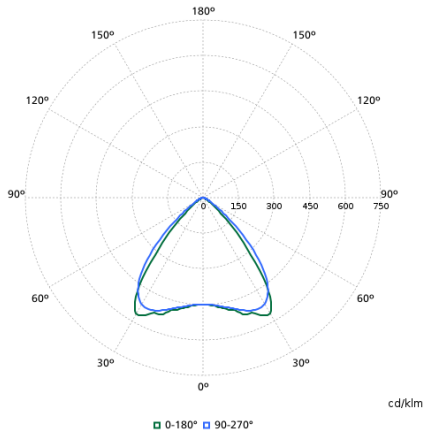

Compatible Accesories

Accessory Image	Accessory Code	Accessory Name	Website
	911401806584	SM136Z SME-3 WH	Product Website
	911401809487	RC159Z Suspension set SME-3 WH	Product Website

Related Documents

Documents and certificates	Document Name	Download
Environmental Product Declaration	EPD-Philips-SM136V-G4-36-45-60S-840-PSU-W20L120-OC-Coreline-surface-mounted-911401841787.pdf	Download
Installation Instructions	Installation-instructions-CoreLine-surface-mounted-Gen4.pdf	Download

Photometry and lighting design	Document Name	Download
IES File	sm136v-g4-43s-840-wia-w20l120-oc-911401842187.ies	Download
LDT File	sm136v-g4-43s-840-wia-w20l120-oc-911401842187.ldt	Download
ROLF File	sm136v-g4-43s-840-wia-w20l120-oc-911401842187.rolfz	Download
ULD File	sm136v-g4-43s-840-wia-w20l120-oc-911401842187.uld	Download
Revit file	sm136v-g4-43s-840-wia-w20l120-oc-911401842187.zip	Download

© 2026 Signify Holding. All rights reserved. The information provided herein is subject to change, without notice. Signify does not give any representation or warranty as to the accuracy or completeness of the information included herein and shall not be liable for any action in reliance thereon. The information presented in this document is not intended as any commercial offer and does not form part of any quotation or contract, unless otherwise agreed by Signify. Philips and the Philips Shield Emblem are registered trademarks of Koninklijke Philips N.V.