PHILIPS

MASTERColor CDM-Rm Elite Mini

D_CDM16E



The next generation in retail lighting -Simply irresistable

The Elite family is at the very top of the MasterColor CDM range, and gives a unique combination of unbeatable light quality and consistent performance over lifetime, while keeping running costs low. The MasterColor DCM Elite MR16 combines the famiilar compact shape of MR16 halogen lamps with the performance of ceramic metal halide MasterColor Elite lamps. Suited for accent/decorative lighting, general lighting and downlighting in retail applications; or for outdoor landscaping and architectural effects.

Benefits

- Easy to install and replace, 100% compatible with existing HID systems in markets today
- Miniaturized reflector eliminates need for optical design
- Excellent choice for today's lighting designs

Applications

- Ideal for display lighting, and accent lighting, general lighting and down lighting in retail applications; and for outdoor

landscaping and architectural effects in retail and hospitality applications.

Features

- Sparkling light - 90 CRI with crisp white light (3000K)
- Long life- 12,000 hours rated average life*
- Lamp-to-lamp color consistency
- GX10 twist-and-lock design locks base into place
- Miniaturized
- * Rated average life is the life obtained on the average, from large reresentative groups of lamps in laboratory tests under controlled conditions at 10 or more operating hours per start. It is based on survival of at least 50% of the lamps and allows for individual lamps or groups of lamps to vary considerably from the average.
- R "WARNING: These lamps can cause serious skin burn and eye inflammation from short wave ultraviolet radiation if outer envelope of the lamp is broken or punctured. Do not use where people will remain for more than a few minutes unless adequate shielding or other safety precautions are used. Certain lamps that will automatically extinguish when the outer envelope is broken or punctured are commercially available." This lamp complies with FDA radiation performance standard 21 CFR subchapter J. (USA:21 CFR 1040.30 Canada: SOR/DORS/80-381)

Versions



LPPR CDM-Rm 0008

Dimensional drawing

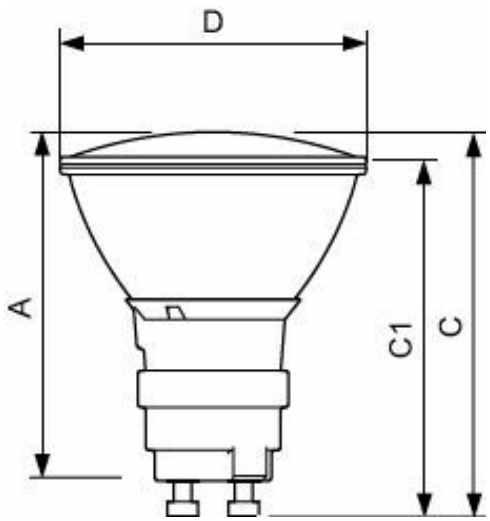

Product	D (max)	D	C (max)	C	C1 (max)	A (max)
CDM-Rm Elite Mini 20W/830 GX10 MR16 25D	51 mm	50 mm	65.4 mm	62.75 mm	60.9 mm	59 mm
CDM-Rm Elite Mini 35W/930 GX10 MR16 25D	51 mm	50 mm	65.4 mm	62.75 mm	60.9 mm	59 mm

General Information

Cap-Base	GX10
Operating Position	UNIVERSAL [Any or Universal (U)]
Switching Cycle	1,350

Light Technical

Beam Angle (Nom)	25 degree(s)
Chromaticity Coordinate X (Nom)	0.439
Chromaticity Coordinate Y (Nom)	0.403
Correlated Color Temperature (Nom)	3000 K

Operating and Electrical

Warm-up time to 60% light	120 s

Controls and Dimming

Dimmable	No

Mechanical and Housing

Bulb Shape	MR16

Light Technical

Order Code	Full Product Name	Luminous Intensity (Nom)	Luminous Efficacy (rated) (Nom)	Color rendering index (CRI)	LLMF At End Of Nominal Lifetime (Nom)
928191105315	CDM-Rm Elite Mini 20W/830 GX10 MR16 25D	4,000 cd	50 lm/W	84	70 %
928194705315	CDM-Rm Elite Mini 35W/930 GX10 MR16 25D	7,600 cd	60 lm/W	90	80 %

Operating and Electrical

Order Code	Full Product Name	Power Consumption	Voltage (Nom)
928191105315	CDM-Rm Elite Mini 20W/830 GX10 MR16 25D	20.1 W	95 V
928194705315	CDM-Rm Elite Mini 35W/930 GX10 MR16 25D	39.1 W	87 V

Approval and Application

Order Code	Full Product Name	Mercury (Hg) Content (Nom)	Energy Consumption kWh/1000 h
928191105315	CDM-Rm Elite Mini 20W/830 GX10 MR16 25D	3.5 mg	22 kWh
928194705315	CDM-Rm Elite Mini 35W/930 GX10 MR16 25D	4.7 mg	43 kWh

© 2026 Signify Holding. All rights reserved. The information provided herein is subject to change, without notice. Signify does not give any representation or warranty as to the accuracy or completeness of the information included herein and shall not be liable for any action in reliance thereon. The information presented in this document is not intended as any commercial offer and does not form part of any quotation or contract, unless otherwise agreed by Signify. Philips and the Philips Shield Emblem are registered trademarks of Koninklijke Philips N.V.