PHILIPS

MASTER VALUE LED spot LV

MSLEDSLV



The ideal solution for spot lighting

Philips MASTER VALUE MR16 is the series of Low Voltage (12VAC) Halogen MR16 replacements. Not only does it employs Philips' patented solution to guarantee the broadest possible compatibility with standard 12V Halogen electronic transformers. It also delivers beam intensity which is equivalent to the 50W Philips Halogen MR16 lamps. The form-factor of Philips MASTER Value LED MR16 guarantees a 100% form on the back-side of the lamp (exact form with Halogen lamps.)

Benefits

- Up to 80% energy saving compared with halogen lamp
- Broad compatibility with transformers
- Retrofitable with low-voltage MR16 halogen lamps with GU5.3 socket

Applications

- Ideal for accent lighting in hotels, hospitals, shops and museums (e.g. floors, elevators, displays)

Features

- Dimmable range
- Patented intelligent driver

- Air movement mechanism (active fan cooling) with very low sound levels
- Lifetime of 25,000
- No UV and Cool Beam (no IR), making suitable for illuminating heat-sensitive objects (food, organic materials, paintings etc.)
- Operating temperature range is between -20° C and 45° C ambient
- Only to apply in dry or damp locations and most of open fixtures with lamp-holders that offer sufficient space (10 mm free air space)
- Not intended for use with emergency light fixtures or exit lights

Versions



LEDspots MAS MR16 GU5,3



MASTER LED 5.5-50W MR16 GU5.3



LEDspots MAS SLR 2 MR11 GU4



LEDspots DIM IC MR16 GU5,3



LEDspots MAS GMGC MR16 GU5,3



LEDspot MR16 GU5.3



LEDspots MAS MR16 GU5,3 1

Dimensional drawing

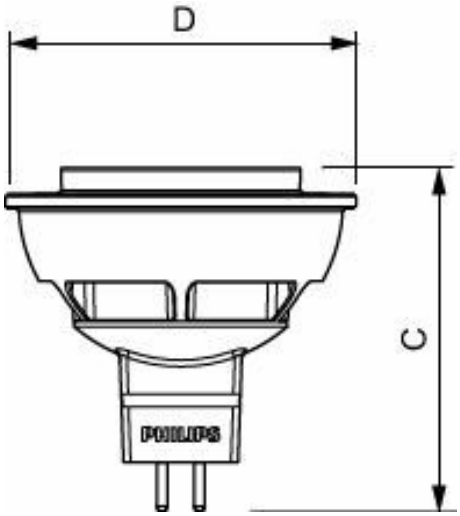

Product	D	C
MASTER LED 5.5-50W 2700K MR16 24D	50.2 mm	49 mm
MASTER LED 5.5-50W 2700K MR16 36D	50.2 mm	49 mm
MASTER LED 5.5-50W 3000K MR16 24D	50.2 mm	49 mm
MASTER LED 5.5-50W 3000K MR16 36D	50.2 mm	49 mm
MASTER LED 5.5-50W 4000K MR16 36D	50.2 mm	49 mm

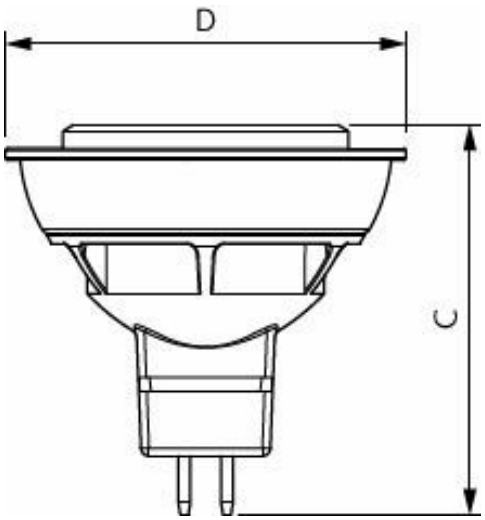

Product	D	C
MASTER LED 3.9-35W 2700K MR16 24D	50.5 mm	50 mm
MASTER LED 3.9-35W 2700K MR16 24D	50.5 mm	50 mm
MASTER LED 3.9-35W 2700K MR16 36D	50.5 mm	50 mm
MASTER LED 3.9-35W 2700K MR16 36D	50.5 mm	50 mm
MASTER LED 3.9-35W 3000K MR16 24D	50.5 mm	50 mm
MASTER LED 3.9-35W 3000K MR16 24D	50.5 mm	50 mm
MASTER LED 3.9-35W 3000K MR16 36D	50.5 mm	50 mm
MASTER LED 3.9-35W 3000K MR16 36D	50.5 mm	50 mm
MASTER LED 4.9-50W 2700K MR16 24D	50.5 mm	50 mm
MASTER LED 4.9-50W 2700K MR16 24D	50.5 mm	50 mm
MASTER LED 4.9-50W 2700K MR16 36D	50.5 mm	50 mm
MASTER LED 4.9-50W 2700K MR16 36D	50.5 mm	50 mm
MASTER LED 4.9-50W 3000K MR16 24D	50.5 mm	50 mm
MASTER LED 4.9-50W 3000K MR16 24D	50.5 mm	50 mm
MASTER LED 4.9-50W 3000K MR16 36D	50.5 mm	50 mm
MASTER LED 4.9-50W 3000K MR16 36D	50.5 mm	50 mm
MASTER LED 4.9-50W 4000K MR16 24D	50.5 mm	50 mm
MASTER LED 4.9-50W 4000K MR16 24D	50.5 mm	50 mm
MASTER LED 4.9-50W 4000K MR16 36D	50.5 mm	50 mm
MASTER LED 4.9-50W 4000K MR16 36D	50.5 mm	50 mm

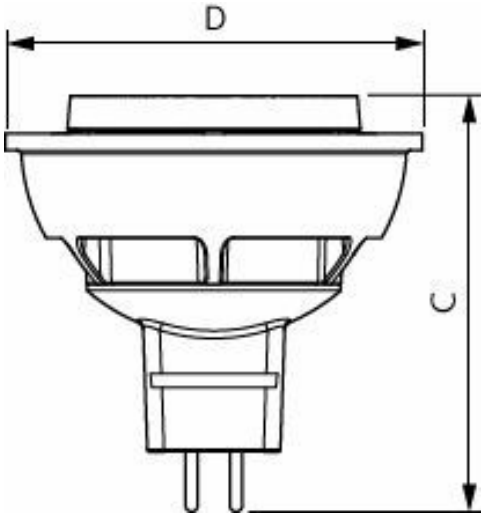

Product	D	C
6.5MR16/F25/2700-2200 DIM 12V	51 mm	50.5 mm
6.5MR16/F35/2700-2200 DIM 12V	51 mm	50.5 mm

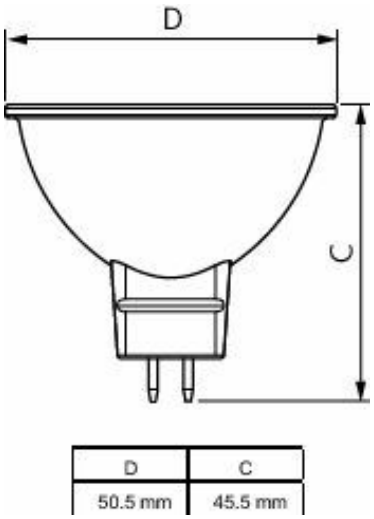

Product	D	C
MAS LED SPOT VLE D 7.5-50W MR16 927 36D	50.5 mm	45.5 mm
MAS LED SPOT VLE D 7.5-50W MR16 927 60D	50.5 mm	45.5 mm
MAS LED SPOT VLE D 7.5-50W MR16 930 36D	50.5 mm	45.5 mm
MAS LED SPOT VLE D 7.5-50W MR16 930 60D	50.5 mm	45.5 mm
MAS LED SPOT VLE D 7.5-50W MR16 940 36D	50.5 mm	45.5 mm
MAS LED SPOT VLE D 7.5-50W MR16 940 60D	50.5 mm	45.5 mm
MAS LED spot VLE D 5.8-35W MR16 927 36D	50.5 mm	45.5 mm
MAS LED spot VLE D 5.8-35W MR16 927 60D	50.5 mm	45.5 mm
MAS LED spot VLE D 5.8-35W MR16 930 36D	50.5 mm	45.5 mm
MAS LED spot VLE D 5.8-35W MR16 930 60D	50.5 mm	45.5 mm
MAS LED spot VLE D 5.8-35W MR16 940 36D	50.5 mm	45.5 mm
MAS LED spot VLE D 5.8-35W MR16 940 60D	50.5 mm	45.5 mm
MAS LEDspotLV DimTone 5.8-35W MR16 36D	50.5 mm	45.5 mm
MAS LEDspotLV DimTone 7.5-50W MR16 36D	50.5 mm	45.5 mm

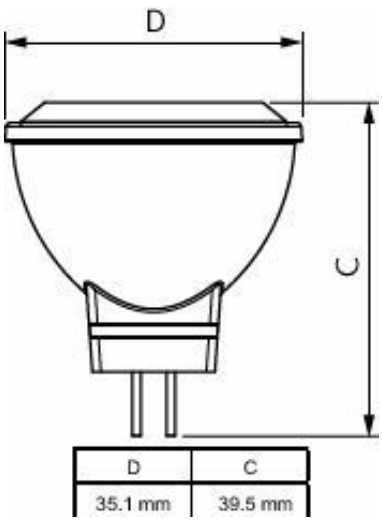

Product	D	C
MAS LEDspotLV 3.5-20W 827 MR11 24D	35.1 mm	39.5 mm

General Information

Switching Cycle	50,000

Light Technical

LLMF At End Of Nominal Lifetime (Nom)	70 %

Operating and Electrical

Line Frequency	- Hz
Input Frequency	- Hz
Starting Time (Nom)	0.5 s

Mechanical and Housing

Bulb Finish	Clear

General Information

Order Code	Full Product Name	Cap-Base	Nominal lifetime
929002492502	MAS LED spot VLE D 5.8-35W MR16 927 36D	GU5.3	25,000 hour(s)
929002492602	MAS LED spot VLE D 5.8-35W MR16 930 36D	GU5.3	25,000 hour(s)
929002492702	MAS LED spot VLE D 5.8-35W MR16 940 36D	GU5.3	25,000 hour(s)
929002492802	MAS LED spot VLE D 5.8-35W MR16 927 60D	GU5.3	25,000 hour(s)
929002492902	MAS LED spot VLE D 5.8-35W MR16 930 60D	GU5.3	25,000 hour(s)
929002493002	MAS LED spot VLE D 5.8-35W MR16 940 60D	GU5.3	25,000 hour(s)
929002493102	MAS LEDspotLV DimTone 5.8-35W MR16 36D	GU5.3	25,000 hour(s)
929002493202	MAS LED SPOT VLE D 7.5-50W MR16 927 36D	GU5.3	25,000 hour(s)
929002493302	MAS LED SPOT VLE D 7.5-50W MR16 930 36D	GU5.3	25,000 hour(s)
929002493402	MAS LED SPOT VLE D 7.5-50W MR16 940 36D	GU5.3	25,000 hour(s)
929001145908	MASTER LED 5.5-50W 2700K MR16 24D	GU5.3	25,000 hour(s)
929001146108	MASTER LED 5.5-50W 2700K MR16 36D	GU5.3	25,000 hour(s)
929001146608	MASTER LED 5.5-50W 3000K MR16 36D	GU5.3	25,000 hour(s)
929001146708	MASTER LED 5.5-50W 3000K MR16 24D	GU5.3	25,000 hour(s)
929001146908	MASTER LED 5.5-50W 4000K MR16 36D	GU5.3	25,000 hour(s)
929003087002	MAS LEDspotLV 3.5-20W 827 MR11 24D	GU4	40,000 hour(s)
929003087104	6.5MR16/F25/2700-2200 DIM 12V	GU5.3	25,000 hour(s)
929003087204	6.5MR16/F35/2700-2200 DIM 12V	GU5.3	25,000 hour(s)
929003610208	MASTER LED 3.9-35W 2700K MR16 24D	GU5.3	25,000 hour(s)
929003610210	MASTER LED 3.9-35W 2700K MR16 24D	GU5.3	25,000 hour(s)
929003610308	MASTER LED 3.9-35W 3000K MR16 24D	GU5.3	25,000 hour(s)
929003610310	MASTER LED 3.9-35W 3000K MR16 24D	GU5.3	25,000 hour(s)
929003610408	MASTER LED 3.9-35W 2700K MR16 36D	GU5.3	25,000 hour(s)

Order Code	Full Product Name	Cap-Base	Nominal lifetime
929003610410	MASTER LED 3.9-35W 2700K MR16 36D	GU5.3	25,000 hour(s)
929003610508	MASTER LED 3.9-35W 3000K MR16 36D	GU5.3	25,000 hour(s)
929003610510	MASTER LED 3.9-35W 3000K MR16 36D	GU5.3	25,000 hour(s)
929003610608	MASTER LED 4.9-50W 2700K MR16 24D	GU5.3	25,000 hour(s)
929003610610	MASTER LED 4.9-50W 2700K MR16 24D	GU5.3	25,000 hour(s)
929003610708	MASTER LED 4.9-50W 3000K MR16 24D	GU5.3	25,000 hour(s)
929003610710	MASTER LED 4.9-50W 3000K MR16 24D	GU5.3	25,000 hour(s)
929003610808	MASTER LED 4.9-50W 4000K MR16 24D	GU5.3	25,000 hour(s)
929003610810	MASTER LED 4.9-50W 4000K MR16 24D	GU5.3	25,000 hour(s)
929003610908	MASTER LED 4.9-50W 2700K MR16 36D	GU5.3	25,000 hour(s)
929003610910	MASTER LED 4.9-50W 2700K MR16 36D	GU5.3	25,000 hour(s)
929003611008	MASTER LED 4.9-50W 3000K MR16 36D	GU5.3	25,000 hour(s)
929003611010	MASTER LED 4.9-50W 3000K MR16 36D	GU5.3	25,000 hour(s)
929003611108	MASTER LED 4.9-50W 4000K MR16 36D	GU5.3	25,000 hour(s)
929003611110	MASTER LED 4.9-50W 4000K MR16 36D	GU5.3	25,000 hour(s)
929002493802	MAS LEDspotLV DimTone 7.5-50W MR16 36D	GU5.3	25,000 hour(s)
929002493502	MAS LED SPOT VLE D 7.5-50W MR16 927 60D	GU5.3	25,000 hour(s)
929002493602	MAS LED SPOT VLE D 7.5-50W MR16 930 60D	GU5.3	25,000 hour(s)
929002493702	MAS LED SPOT VLE D 7.5-50W MR16 940 60D	GU5.3	25,000 hour(s)

Light Technical

Order Code	Full Product Name	Color Code	Beam Angle (Nom)	Luminous Flux	Luminous Intensity (Nom)	Correlated Color Temperature (Nom)	Color rendering index (CRI)
929002492502	MAS LED spot VLE D 5.8-35W MR16 927 36D	927	36 degree(s)	450 lm	1,300 cd	2700 K	90
929002492602	MAS LED spot VLE D 5.8-35W MR16 930 36D	930	36 degree(s)	460 lm	1,300 cd	3000 K	90
929002492702	MAS LED spot VLE D 5.8-35W MR16 940 36D	940	36 degree(s)	490 lm	1,200 cd	4000 K	90
929002492802	MAS LED spot VLE D 5.8-35W MR16 927 60D	927	60 degree(s)	450 lm	600 cd	2700 K	90
929002492902	MAS LED spot VLE D 5.8-35W MR16 930 60D	930	60 degree(s)	460 lm	600 cd	3000 K	90
929002493002	MAS LED spot VLE D 5.8-35W MR16 940 60D	940	60 degree(s)	490 lm	550 cd	4000 K	90
929002493102	MAS LEDspotLV DimTone 5.8-35W MR16 36D	922-927	36 degree(s)	345 lm	800 cd	2200 K 2700 K	90
929002493202	MAS LED SPOT VLE D 7.5-50W MR16 927 36D	927	36 degree(s)	621 lm	1,600 cd	2700 K	90
929002493302	MAS LED SPOT VLE D 7.5-50W MR16 930 36D	930	36 degree(s)	630 lm	1,600 cd	3000 K	90
929002493402	MAS LED SPOT VLE D 7.5-50W MR16 940 36D	940	36 degree(s)	660 lm	1,500 cd	4000 K	90
929001145908	MASTER LED 5.5-50W 2700K MR16 24D	827	24 degree(s)	415 lm	1,800 cd	2700 K	80
929001146108	MASTER LED 5.5-50W 2700K MR16 36D	827	36 degree(s)	415 lm	1,000 cd	2700 K	80
929001146608	MASTER LED 5.5-50W 3000K MR16 36D	830	36 degree(s)	425 lm	1,000 cd	3000 K	80
929001146708	MASTER LED 5.5-50W 3000K MR16 24D	830	24 degree(s)	425 lm	1,800 cd	3000 K	80
929001146908	MASTER LED 5.5-50W 4000K MR16 36D	840	36 degree(s)	450 lm	1,000 cd	4000 K	80

Order Code	Full Product Name	Color Code	Beam Angle (Nom)	Luminous Flux	Luminous Intensity (Nom)	Correlated Color Temperature (Nom)	Color rendering index (CRI)
929003087002	MAS LEDspotLV 3.5-20W 827 MR11 24D	827	24 degree(s)	200 lm	1,000 cd	2700 K	80
929003087104	6.5MR16/F25/2700-2200 DIM 12V	822-827	25 degree(s)	455 lm	1,601 cd	2200 K 2700 K	80
929003087204	6.5MR16/F35/2700-2200 DIM 12V	822-827	35 degree(s)	455 lm	950 cd	2200 K 2700 K	80
929003610208	MASTER LED 3.9-35W 2700K MR16 24D	927	24 degree(s)	270 lm	1,000 cd	2700 K	90
929003610210	MASTER LED 3.9-35W 2700K MR16 24D	927	24 degree(s)	270 lm	1,000 cd	2700 K	90
929003610308	MASTER LED 3.9-35W 3000K MR16 24D	930	24 degree(s)	280 lm	1,000 cd	3000 K	90
929003610310	MASTER LED 3.9-35W 3000K MR16 24D	930	24 degree(s)	280 lm	1,000 cd	3000 K	90
929003610408	MASTER LED 3.9-35W 2700K MR16 36D	927	36 degree(s)	270 lm	600 cd	2700 K	90
929003610410	MASTER LED 3.9-35W 2700K MR16 36D	927	36 degree(s)	270 lm	600 cd	2700 K	90
929003610508	MASTER LED 3.9-35W 3000K MR16 36D	930	36 degree(s)	280 lm	600 cd	3000 K	90
929003610510	MASTER LED 3.9-35W 3000K MR16 36D	930	36 degree(s)	280 lm	600 cd	3000 K	90
929003610608	MASTER LED 4.9-50W 2700K MR16 24D	927	24 degree(s)	415 lm	1,600 cd	2700 K	90
929003610610	MASTER LED 4.9-50W 2700K MR16 24D	927	24 degree(s)	415 lm	1,600 cd	2700 K	90
929003610708	MASTER LED 4.9-50W 3000K MR16 24D	930	24 degree(s)	425 lm	1,700 cd	3000 K	90
929003610710	MASTER LED 4.9-50W 3000K MR16 24D	930	24 degree(s)	425 lm	1,700 cd	3000 K	90
929003610808	MASTER LED 4.9-50W 4000K MR16 24D	940	24 degree(s)	430 lm	1,700 cd	4000 K	90
929003610810	MASTER LED 4.9-50W 4000K MR16 24D	940	24 degree(s)	430 lm	1,700 cd	4000 K	90
929003610908	MASTER LED 4.9-50W 2700K MR16 36D	927	36 degree(s)	415 lm	900 cd	2700 K	90
929003610910	MASTER LED 4.9-50W 2700K MR16 36D	927	36 degree(s)	415 lm	900 cd	2700 K	90
929003611008	MASTER LED 4.9-50W 3000K MR16 36D	930	36 degree(s)	425 lm	950 cd	3000 K	90
929003611010	MASTER LED 4.9-50W 3000K MR16 36D	930	36 degree(s)	425 lm	950 cd	3000 K	90
929003611108	MASTER LED 4.9-50W 4000K MR16 36D	940	36 degree(s)	430 lm	950 cd	4000 K	90
929003611110	MASTER LED 4.9-50W 4000K MR16 36D	940	36 degree(s)	430 lm	950 cd	4000 K	90
929002493802	MAS LEDspotLV DimTone 7.5-50W MR16 36D	922-927	36 degree(s)	621 lm	1,100 cd	2200 K 2700 K	90
929002493502	MAS LED SPOT VLE D 7.5-50W MR16 927 60D	927	60 degree(s)	621 lm	750 cd	2700 K	90
929002493602	MAS LED SPOT VLE D 7.5-50W MR16 930 60D	930	60 degree(s)	630 lm	800 cd	3000 K	90
929002493702	MAS LED SPOT VLE D 7.5-50W MR16 940 60D	940	60 degree(s)	660 lm	770 cd	4000 K	90

Operating and Electrical

Order Code	Full Product Name	Power Consumption	Wattage Equivalent
929002492502	MAS LED spot VLE D 5.8-35W MR16 927 36D	5.8 W	35 W
929002492602	MAS LED spot VLE D 5.8-35W MR16 930 36D	5.8 W	35 W
929002492702	MAS LED spot VLE D 5.8-35W MR16 940 36D	5.8 W	35 W
929002492802	MAS LED spot VLE D 5.8-35W MR16 927 60D	5.8 W	35 W
929002492902	MAS LED spot VLE D 5.8-35W MR16 930 60D	5.8 W	35 W
929002493002	MAS LED spot VLE D 5.8-35W MR16 940 60D	5.8 W	35 W
929002493102	MAS LEDspotLV DimTone 5.8-35W MR16 36D	5.8 W	35 W

Order Code	Full Product Name	Power Consumption	Wattage Equivalent
929002493202	MAS LED SPOT VLE D 7.5-50W MR16 927 36D	7.5 W	50 W
929002493302	MAS LED SPOT VLE D 7.5-50W MR16 930 36D	7.5 W	50 W
929002493402	MAS LED SPOT VLE D 7.5-50W MR16 940 36D	7.5 W	50 W
929001145908	MASTER LED 5.5-50W 2700K MR16 24D	5.5 W	50 W
929001146108	MASTER LED 5.5-50W 2700K MR16 36D	5.5 W	50 W
929001146608	MASTER LED 5.5-50W 3000K MR16 36D	5.5 W	50 W
929001146708	MASTER LED 5.5-50W 3000K MR16 24D	5.5 W	50 W
929001146908	MASTER LED 5.5-50W 4000K MR16 36D	5.5 W	50 W
929003087002	MAS LEDspotLV 3.5-20W 827 MR11 24D	3.5 W	20 W
929003087104	6.5MR16/F25/2700-2200 DIM 12V	6.5 W	35 W
929003087204	6.5MR16/F35/2700-2200 DIM 12V	6.5 W	35 W
929003610208	MASTER LED 3.9-35W 2700K MR16 24D	3.9 W	35 W
929003610210	MASTER LED 3.9-35W 2700K MR16 24D	3.9 W	35 W
929003610308	MASTER LED 3.9-35W 3000K MR16 24D	3.9 W	35 W
929003610310	MASTER LED 3.9-35W 3000K MR16 24D	3.9 W	35 W
929003610408	MASTER LED 3.9-35W 2700K MR16 36D	3.9 W	35 W
929003610410	MASTER LED 3.9-35W 2700K MR16 36D	3.9 W	35 W
929003610508	MASTER LED 3.9-35W 3000K MR16 36D	3.9 W	35 W
929003610510	MASTER LED 3.9-35W 3000K MR16 36D	3.9 W	35 W
929003610608	MASTER LED 4.9-50W 2700K MR16 24D	4.9 W	50 W
929003610610	MASTER LED 4.9-50W 2700K MR16 24D	4.9 W	50 W
929003610708	MASTER LED 4.9-50W 3000K MR16 24D	4.9 W	50 W
929003610710	MASTER LED 4.9-50W 3000K MR16 24D	4.9 W	50 W
929003610808	MASTER LED 4.9-50W 4000K MR16 24D	4.9 W	50 W
929003610810	MASTER LED 4.9-50W 4000K MR16 24D	4.9 W	50 W
929003610908	MASTER LED 4.9-50W 2700K MR16 36D	4.9 W	50 W
929003610910	MASTER LED 4.9-50W 2700K MR16 36D	4.9 W	50 W
929003611008	MASTER LED 4.9-50W 3000K MR16 36D	4.9 W	50 W
929003611010	MASTER LED 4.9-50W 3000K MR16 36D	4.9 W	50 W
929003611108	MASTER LED 4.9-50W 4000K MR16 36D	4.9 W	50 W
929003611110	MASTER LED 4.9-50W 4000K MR16 36D	4.9 W	50 W
929002493802	MAS LEDspotLV DimTone 7.5-50W MR16 36D	7.5 W	50 W
929002493502	MAS LED SPOT VLE D 7.5-50W MR16 927 60D	7.5 W	50 W
929002493602	MAS LED SPOT VLE D 7.5-50W MR16 930 60D	7.5 W	50 W
929002493702	MAS LED SPOT VLE D 7.5-50W MR16 940 60D	7.5 W	50 W

Temperature

Order Code	Full Product Name	T-Case Maximum (Nom)
929002492502	MAS LED spot VLE D 5.8-35W MR16 927 36D	85 °C
929002492602	MAS LED spot VLE D 5.8-35W MR16 930 36D	85 °C
929002492702	MAS LED spot VLE D 5.8-35W MR16 940 36D	85 °C

Order Code	Full Product Name	T-Case Maximum (Nom)
929002492802	MAS LED spot VLE D 5.8-35W MR16 927 60D	85 °C
929002492902	MAS LED spot VLE D 5.8-35W MR16 930 60D	85 °C
929002493002	MAS LED spot VLE D 5.8-35W MR16 940 60D	85 °C
929002493102	MAS LEDspotLV DimTone 5.8-35W MR16 36D	88 °C
929002493202	MAS LED SPOT VLE D 7.5-50W MR16 927 36D	95 °C
929002493302	MAS LED SPOT VLE D 7.5-50W MR16 930 36D	95 °C
929002493402	MAS LED SPOT VLE D 7.5-50W MR16 940 36D	95 °C
929001145908	MASTER LED 5.5-50W 2700K MR16 24D	95 °C
929001146108	MASTER LED 5.5-50W 2700K MR16 36D	95 °C
929001146608	MASTER LED 5.5-50W 3000K MR16 36D	95 °C
929001146708	MASTER LED 5.5-50W 3000K MR16 24D	95 °C
929001146908	MASTER LED 5.5-50W 4000K MR16 36D	95 °C
929003087002	MAS LEDspotLV 3.5-20W 827 MR11 24D	85 °C
929003087104	6.5MR16/F25/2700-2200 DIM 12V	80 °C
929003087204	6.5MR16/F35/2700-2200 DIM 12V	80 °C
929003610208	MASTER LED 3.9-35W 2700K MR16 24D	68 °C
929003610210	MASTER LED 3.9-35W 2700K MR16 24D	68 °C
929003610308	MASTER LED 3.9-35W 3000K MR16 24D	68 °C
929003610310	MASTER LED 3.9-35W 3000K MR16 24D	68 °C
929003610408	MASTER LED 3.9-35W 2700K MR16 36D	68 °C
929003610410	MASTER LED 3.9-35W 2700K MR16 36D	68 °C
929003610508	MASTER LED 3.9-35W 3000K MR16 36D	68 °C
929003610510	MASTER LED 3.9-35W 3000K MR16 36D	68 °C
929003610608	MASTER LED 4.9-50W 2700K MR16 24D	72 °C
929003610610	MASTER LED 4.9-50W 2700K MR16 24D	72 °C
929003610708	MASTER LED 4.9-50W 3000K MR16 24D	72 °C
929003610710	MASTER LED 4.9-50W 3000K MR16 24D	72 °C
929003610808	MASTER LED 4.9-50W 4000K MR16 24D	72 °C
929003610810	MASTER LED 4.9-50W 4000K MR16 24D	72 °C
929003610908	MASTER LED 4.9-50W 2700K MR16 36D	72 °C
929003610910	MASTER LED 4.9-50W 2700K MR16 36D	72 °C
929003611008	MASTER LED 4.9-50W 3000K MR16 36D	72 °C
929003611010	MASTER LED 4.9-50W 3000K MR16 36D	72 °C
929003611108	MASTER LED 4.9-50W 4000K MR16 36D	72 °C
929003611110	MASTER LED 4.9-50W 4000K MR16 36D	72 °C
929002493802	MAS LEDspotLV DimTone 7.5-50W MR16 36D	95 °C
929002493502	MAS LED SPOT VLE D 7.5-50W MR16 927 60D	95 °C
929002493602	MAS LED SPOT VLE D 7.5-50W MR16 930 60D	95 °C
929002493702	MAS LED SPOT VLE D 7.5-50W MR16 940 60D	95 °C

Controls and Dimming

Order Code	Full Product Name	Dimmable
929002492502	MAS LED spot VLE D 5.8-35W MR16 927 36D	Only with specific dimmers
929002492602	MAS LED spot VLE D 5.8-35W MR16 930 36D	Only with specific dimmers
929002492702	MAS LED spot VLE D 5.8-35W MR16 940 36D	Only with specific dimmers
929002492802	MAS LED spot VLE D 5.8-35W MR16 927 60D	Only with specific dimmers
929002492902	MAS LED spot VLE D 5.8-35W MR16 930 60D	Only with specific dimmers
929002493002	MAS LED spot VLE D 5.8-35W MR16 940 60D	Only with specific dimmers
929002493102	MAS LEDspotLV DimTone 5.8-35W MR16 36D	Only with specific dimmers
929002493202	MAS LED SPOT VLE D 7.5-50W MR16 927 36D	Only with specific dimmers
929002493302	MAS LED SPOT VLE D 7.5-50W MR16 930 36D	Only with specific dimmers
929002493402	MAS LED SPOT VLE D 7.5-50W MR16 940 36D	Only with specific dimmers
929001145908	MASTER LED 5.5-50W 2700K MR16 24D	No
929001146108	MASTER LED 5.5-50W 2700K MR16 36D	No
929001146608	MASTER LED 5.5-50W 3000K MR16 36D	No
929001146708	MASTER LED 5.5-50W 3000K MR16 24D	No
929001146908	MASTER LED 5.5-50W 4000K MR16 36D	No
929003087002	MAS LEDspotLV 3.5-20W 827 MR11 24D	No
929003087104	6.5MR16/F25/2700-2200 DIM 12V	Only with specific dimmers
929003087204	6.5MR16/F35/2700-2200 DIM 12V	Only with specific dimmers
929003610208	MASTER LED 3.9-35W 2700K MR16 24D	No
929003610210	MASTER LED 3.9-35W 2700K MR16 24D	No
929003610308	MASTER LED 3.9-35W 3000K MR16 24D	No
929003610310	MASTER LED 3.9-35W 3000K MR16 24D	No
929003610408	MASTER LED 3.9-35W 2700K MR16 36D	No
929003610410	MASTER LED 3.9-35W 2700K MR16 36D	No
929003610508	MASTER LED 3.9-35W 3000K MR16 36D	No
929003610510	MASTER LED 3.9-35W 3000K MR16 36D	No
929003610608	MASTER LED 4.9-50W 2700K MR16 24D	No
929003610610	MASTER LED 4.9-50W 2700K MR16 24D	No
929003610708	MASTER LED 4.9-50W 3000K MR16 24D	No
929003610710	MASTER LED 4.9-50W 3000K MR16 24D	No
929003610808	MASTER LED 4.9-50W 4000K MR16 24D	No
929003610810	MASTER LED 4.9-50W 4000K MR16 24D	No
929003610908	MASTER LED 4.9-50W 2700K MR16 36D	No
929003610910	MASTER LED 4.9-50W 2700K MR16 36D	No
929003611008	MASTER LED 4.9-50W 3000K MR16 36D	No
929003611010	MASTER LED 4.9-50W 3000K MR16 36D	No
929003611108	MASTER LED 4.9-50W 4000K MR16 36D	No
929003611110	MASTER LED 4.9-50W 4000K MR16 36D	No
929002493802	MAS LEDspotLV DimTone 7.5-50W MR16 36D	Only with specific dimmers
929002493502	MAS LED SPOT VLE D 7.5-50W MR16 927 60D	Only with specific dimmers
929002493602	MAS LED SPOT VLE D 7.5-50W MR16 930 60D	Only with specific dimmers
929002493702	MAS LED SPOT VLE D 7.5-50W MR16 940 60D	Only with specific dimmers

Mechanical and Housing

Order Code	Full Product Name	Bulb Shape
929002492502	MAS LED spot VLE D 5.8-35W MR16 927 36D	MR16
929002492602	MAS LED spot VLE D 5.8-35W MR16 930 36D	MR16
929002492702	MAS LED spot VLE D 5.8-35W MR16 940 36D	MR16
929002492802	MAS LED spot VLE D 5.8-35W MR16 927 60D	MR16
929002492902	MAS LED spot VLE D 5.8-35W MR16 930 60D	MR16
929002493002	MAS LED spot VLE D 5.8-35W MR16 940 60D	MR16
929002493102	MAS LEDspotLV DimTone 5.8-35W MR16 36D	MR16
929002493202	MAS LED SPOT VLE D 7.5-50W MR16 927 36D	MR16
929002493302	MAS LED SPOT VLE D 7.5-50W MR16 930 36D	MR16
929002493402	MAS LED SPOT VLE D 7.5-50W MR16 940 36D	MR16
929001145908	MASTER LED 5.5-50W 2700K MR16 24D	MR16
929001146108	MASTER LED 5.5-50W 2700K MR16 36D	MR16
929001146608	MASTER LED 5.5-50W 3000K MR16 36D	MR16
929001146708	MASTER LED 5.5-50W 3000K MR16 24D	MR16
929001146908	MASTER LED 5.5-50W 4000K MR16 36D	MR16
929003087002	MAS LEDspotLV 3.5-20W 827 MR11 24D	MR11
929003087104	6.5MR16/F25/2700-2200 DIM 12V	MR16
929003087204	6.5MR16/F35/2700-2200 DIM 12V	MR16
929003610208	MASTER LED 3.9-35W 2700K MR16 24D	MR16
929003610210	MASTER LED 3.9-35W 2700K MR16 24D	MR16
929003610308	MASTER LED 3.9-35W 3000K MR16 24D	MR16
929003610310	MASTER LED 3.9-35W 3000K MR16 24D	MR16
929003610408	MASTER LED 3.9-35W 2700K MR16 36D	MR16
929003610410	MASTER LED 3.9-35W 2700K MR16 36D	MR16
929003610508	MASTER LED 3.9-35W 3000K MR16 36D	MR16
929003610510	MASTER LED 3.9-35W 3000K MR16 36D	MR16
929003610608	MASTER LED 4.9-50W 2700K MR16 24D	MR16
929003610610	MASTER LED 4.9-50W 2700K MR16 24D	MR16
929003610708	MASTER LED 4.9-50W 3000K MR16 24D	MR16
929003610710	MASTER LED 4.9-50W 3000K MR16 24D	MR16
929003610808	MASTER LED 4.9-50W 4000K MR16 24D	MR16
929003610810	MASTER LED 4.9-50W 4000K MR16 24D	MR16
929003610908	MASTER LED 4.9-50W 2700K MR16 36D	MR16
929003610910	MASTER LED 4.9-50W 2700K MR16 36D	MR16
929003611008	MASTER LED 4.9-50W 3000K MR16 36D	MR16
929003611010	MASTER LED 4.9-50W 3000K MR16 36D	MR16
929003611108	MASTER LED 4.9-50W 4000K MR16 36D	MR16
929003611110	MASTER LED 4.9-50W 4000K MR16 36D	MR16
929002493802	MAS LEDspotLV DimTone 7.5-50W MR16 36D	MR16
929002493502	MAS LED SPOT VLE D 7.5-50W MR16 927 60D	MR16
929002493602	MAS LED SPOT VLE D 7.5-50W MR16 930 60D	MR16
929002493702	MAS LED SPOT VLE D 7.5-50W MR16 940 60D	MR16

Approval and Application

Order Code	Full Product Name	Energy Consumption kWh/1000 h	Ambient temperature range
929002492502	MAS LED spot VLE D 5.8-35W MR16 927 36D	6 kWh	-20 to +40 °C
929002492602	MAS LED spot VLE D 5.8-35W MR16 930 36D	6 kWh	-20 to +40 °C
929002492702	MAS LED spot VLE D 5.8-35W MR16 940 36D	6 kWh	-20 to +40 °C
929002492802	MAS LED spot VLE D 5.8-35W MR16 927 60D	6 kWh	-20 to +40 °C
929002492902	MAS LED spot VLE D 5.8-35W MR16 930 60D	6 kWh	-20 to +40 °C
929002493002	MAS LED spot VLE D 5.8-35W MR16 940 60D	6 kWh	-20 to +40 °C
929002493102	MAS LEDspotLV DimTone 5.8-35W MR16 36D	6 kWh	-20 to +40 °C
929002493202	MAS LED SPOT VLE D 7.5-50W MR16 927 36D	8 kWh	-20 to +40 °C
929002493302	MAS LED SPOT VLE D 7.5-50W MR16 930 36D	8 kWh	-20 to +40 °C
929002493402	MAS LED SPOT VLE D 7.5-50W MR16 940 36D	8 kWh	-20 to +40 °C
929001145908	MASTER LED 5.5-50W 2700K MR16 24D	-	-20 to +45 °C
929001146108	MASTER LED 5.5-50W 2700K MR16 36D	-	-20 to +45 °C
929001146608	MASTER LED 5.5-50W 3000K MR16 36D	-	-20 to +45 °C
929001146708	MASTER LED 5.5-50W 3000K MR16 24D	-	-20 to +45 °C
929001146908	MASTER LED 5.5-50W 4000K MR16 36D	-	-20 to +45 °C
929003087002	MAS LEDspotLV 3.5-20W 827 MR11 24D	4 kWh	-20 to +45 °C
929003087104	6.5MR16/F25/2700-2200 DIM 12V	-	-20 to +45 °C
929003087204	6.5MR16/F35/2700-2200 DIM 12V	-	-20 to +45 °C
929003610208	MASTER LED 3.9-35W 2700K MR16 24D	-	-20 to +45 °C
929003610210	MASTER LED 3.9-35W 2700K MR16 24D	-	-20 to +45 °C
929003610308	MASTER LED 3.9-35W 3000K MR16 24D	-	-20 to +45 °C
929003610310	MASTER LED 3.9-35W 3000K MR16 24D	-	-20 to +45 °C
929003610408	MASTER LED 3.9-35W 2700K MR16 36D	-	-20 to +45 °C
929003610410	MASTER LED 3.9-35W 2700K MR16 36D	-	-20 to +45 °C
929003610508	MASTER LED 3.9-35W 3000K MR16 36D	-	-20 to +45 °C
929003610510	MASTER LED 3.9-35W 3000K MR16 36D	-	-20 to +45 °C
929003610608	MASTER LED 4.9-50W 2700K MR16 24D	-	-20 to +45 °C
929003610610	MASTER LED 4.9-50W 2700K MR16 24D	-	-20 to +45 °C
929003610708	MASTER LED 4.9-50W 3000K MR16 24D	-	20 to +45 °C
929003610710	MASTER LED 4.9-50W 3000K MR16 24D	-	-20 to +45 °C
929003610808	MASTER LED 4.9-50W 4000K MR16 24D	-	-20 to +45 °C
929003610810	MASTER LED 4.9-50W 4000K MR16 24D	-	-20 to +45 °C
929003610908	MASTER LED 4.9-50W 2700K MR16 36D	-	-20 to +45 °C
929003610910	MASTER LED 4.9-50W 2700K MR16 36D	-	-20 to +45 °C
929003611008	MASTER LED 4.9-50W 3000K MR16 36D	-	-20 to +45 °C
929003611010	MASTER LED 4.9-50W 3000K MR16 36D	-	-20 to +45 °C
929003611108	MASTER LED 4.9-50W 4000K MR16 36D	-	-20 to +45 °C
929003611110	MASTER LED 4.9-50W 4000K MR16 36D	-	-20 to +45 °C
929002493802	MAS LEDspotLV DimTone 7.5-50W MR16 36D	8 kWh	-20 to +40 °C
929002493502	MAS LED SPOT VLE D 7.5-50W MR16 927 60D	8 kWh	-20 to +40 °C
929002493602	MAS LED SPOT VLE D 7.5-50W MR16 930 60D	8 kWh	-20 to +40 °C
929002493702	MAS LED SPOT VLE D 7.5-50W MR16 940 60D	8 kWh	-20 to +40 °C

© 2026 Signify Holding. All rights reserved. The information provided herein is subject to change, without notice. Signify does not give any representation or warranty as to the accuracy or completeness of the information included herein and shall not be liable for any action in reliance thereon. The information presented in this document is not intended as any commercial offer and does not form part of any quotation or contract, unless otherwise agreed by Signify. Philips and the Philips Shield Emblem are registered trademarks of Koninklijke Philips N.V.