Signify

LumiStreet gen2

BGP291



Time to upgrade your conventional lighting to LumiStreet gen2

Designed for ledification projects, the LumiStreet gen2 is the ideal 1:1 luminaire replacement for municipalities. Thanks to its high efficiency and low initial cost, the LumiStreet gen2 luminaire enables a fast payback and significant savings in terms of energy consumption within a short period of time. The ease of installation and maintenance is enabled by the Service tag and the SR (System Ready) Zhaga socket(s) makes it future-ready, and you can pair this luminaire with lighting control or sensors and software applications such as Interact City. Available with a significant number of different optics and lumen packages that can even be tuned further to fit exact project requirements, LumiStreet gen2 is a true point-to-point replacement solution for conventional or generation 1 LED light sources. The compact luminaire, using high-quality materials is also easy to dismantle and recycle at the end of its lifetime. In case toolless opening and closing of the gear cover is required the LumiStreet gen2 Pro version can be chosen.

Benefits

- Economical LED alternative to conventional street lights
- Offers high efficiency and energy savings
- Made of high-quality materials for longer lifetime and minimized maintenance
- Future-ready thanks to the SR (System Ready) socket
- High system efficiency with good application coverage
- Luminaire is also equipped with dedicated light recipes that help with: 1) maintaining an optimal ecosystems for bats or 2) preserving a dark night sky and reduce light pollution
- Version with toolless opening and closing gear cover available if required (Lumistreet gen2 Pro).

Applications

- Roads and streets
- Residential streets

Features

- Good application coverage thanks to wide range of optics, tunable flux and tillable spigot
- Easy luminaire identification due to the Service tag

Versions



Product picture
Lumistreet gen2 Medium



Product picture
Lumistreet gen2 Mini



Product picture
Lumistreet gen2 Large



Product picture
Lumistreet gen2 Micro

Dimensional drawing

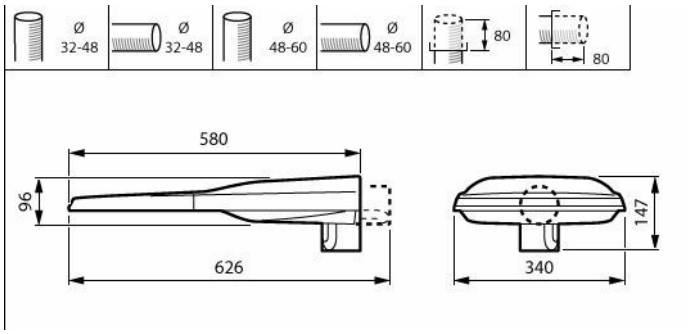

BGP293 LED240-4S/740 II DM50 D9 48/60S

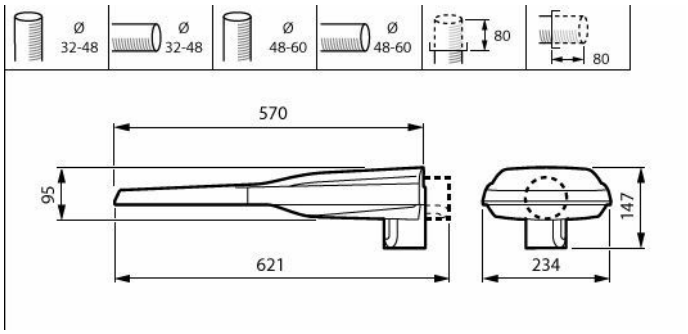

BGP292 LED75-4S/740 I DX10 7024 D9 48/60

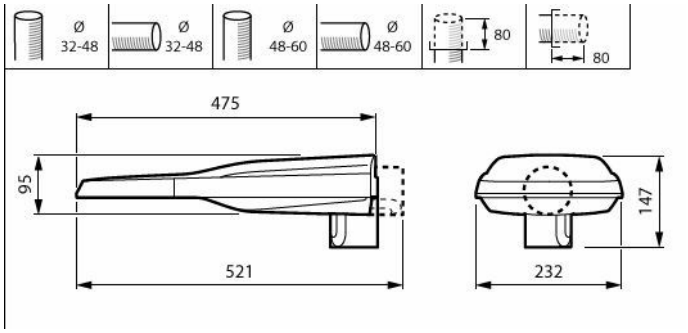

BGP291 LED50-1P/740 UE II DM24P D9 48/60

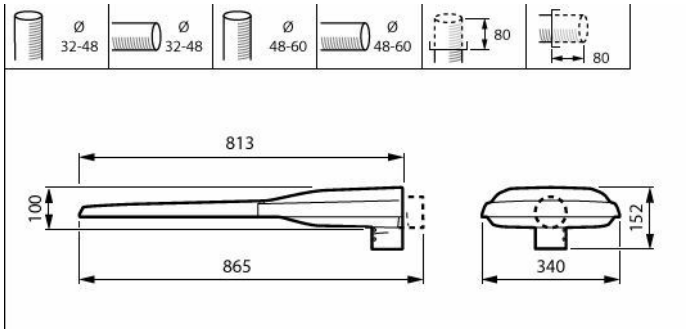

LUMISTREET PRO GEN2 LARGE - LED module 34000 lm - 740 neutral white - Safety class II - Distribution medium 11 - Side-entry for diameter 48 to 60 mm

Product details



Lumistreet gen2 Pro Micro Clips open view



Lumistreet gen2 Medium bottom view



Lumistreet gen2 Medium bottom view



UniStreet_LumiStreet_gen 2



Lumistreet gen2 Large profile view



Lumistreet gen2 Large top view



Lumistreet gen2 all sizes top view

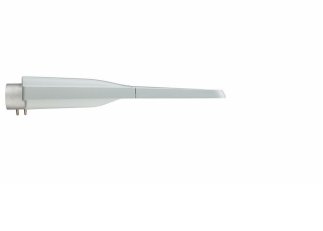

UniStreet_LumiStreet_gen 2



Lumistreet gen2 Mini bottom view



Lumistreet gen2 Pro Micro Clips and Driver open view



UniStreet_LumiStreet_gen 2



Lumistreet gen2 Micro bottom view



Lumistreet gen2 all sizes bottom view



UniStreet_LumiStreet_gen 2



Lumistreet gen2 Pro Micro clips view



Lumistreet gen2 all sizes Sideview



Lumistreet gen2 all sizes Sideview



Lumistreet gen2 spigot regulation



Lumistreet gen2 spigot regulation



Lumistreet gen2 Large bottom view

General Information

Light source replaceable	Yes
Driver included	Yes
Service tag	Yes

Light Technical

Upward light output ratio	0
Color rendering index (CRI)	70

Mechanical and Housing

Ingress protection code	IP66 [Dust penetration-protected, jet-proof]
Standard tilt angle posttop	0°
Standard tilt angle side entry	0°
Optical cover type	Flat glass

Approval and Application

Flammability mark	For mounting on normally flammable surfaces
CE mark	Yes

Over Time Performance (IEC Compliant)

Driver failure rate at 5000 h	0.5 %

General Information

Order Code	Full Product Name	Lamp family code	Number of gear units
910925866444	BGP293 LED240-4S/740 I DM11 48/60S	LED240	1 unit
910925866633	BGP293 LED240-4S/740 II DM50 D9 48/60S	LED240	1 unit
910925868815	BGP293 LED160-4S/740 II DM32 MSP CLO-DDF	LED160	1 unit
910925868816	BGP293 LED160-4S/740 II DM32 MSP CLO-DDF	LED160	1 unit
910925868817	BGP293 LED240-4S/740 II DM32 MSP CLO-DDF	LED240	1 unit
910925868818	BGP293 LED240-4S/740 II DM32 MSP CLO-DDF	LED240	1 unit
910925868935	BGP293 LED240-4S/730 II DM32 MSP SRG10 H	LED240	1 unit
910925869853	BGP293 LED240-1P/740 UE II DM24P D9 48/6	LED240	1 unit
910925865677	BGP292 LED99-4S/740 I DX10 7024 D9 48/60	LED99	1 unit
910925866617	BGP292 LED80-4S/740 II DM50 D9 48/60S	LED80	1 unit
910925866628	BGP292 LED120-4S/740 II DM50 D9 48/60S	LED120	1 unit
910925866639	BGP292 LED120-4S/740 II DM11 48/60S	LED120	1 unit
910925866640	BGP292 LED85-4S/740 II DM11 48/60S	LED85	1 unit
910925866657	BGP392 LED120-4S/740 II DM11 D9 48/60S	LED120	1 unit
910925866697	BGP292 LED75-4S/740 I DX10 7024 D9 48/60	LED75	1 unit
910925866698	BGP292 LED49-4S/740 I DX10 7024 D9 48/60	LED49	1 unit
910925866705	BGP292 LED75-4S/740 I DX10 7024 D9 76S	LED75	1 unit
910925866766	BGP292 LED99-4S/740 I DX10 7024 D9 76S	LED99	1 unit
910925868107	BGP292 LED100-4S/730 II DM50 MSP 48/60S	LED100	1 unit
910925868108	BGP292 LED100-4S/730 II DM50 48/60S	LED100	1 unit
910925869852	BGP292 LED120-1P/740 UE II DM24P D9 48/6	LED240	1 unit
910925870249	BGP392 LED120-1P/740 II DM65P FS 32/76P	LED120	1 unit
910925870251	BGP392 LED113-1P/730 II DM65P FS 32/76P	LED113	1 unit
910925866667	BGP394 LED340-4S/740 II DM11 D9 48/60S P	LED340	2 units
910925869854	BGP294 LED340-1P/740 UE II DM24P D9 48/6	LED240	1 unit
910925868105	BGP291 LED51-4S/730 II DM50 MSP 48/60S	LED51	1 unit
910925868106	BGP291 LED51-4S/730 II DM50 48/60S	LED51	1 unit
910925868811	BGP291 LED64-4S/740 II DM32 MSP CLO-DDF2	LED64	1 unit
910925868812	BGP291 LED64-4S/740 II DM32 MSP CLO-DDF2	LED64	1 unit
910925869851	BGP291 LED50-1P/740 UE II DM24P D9 48/60	LED240	1 unit
910925870248	BGP391 LED82-1P/740 II DM65P FS 32/76P	LED82	1 unit
910925870250	BGP391 LED78-1P/730 II DM65P FS 32/76P	LED79	1 unit

Light Technical

Order Code	Full Product Name	Luminous Flux	Correlated Color Temperature (Nom)	Light source color	Luminaire light beam spread	Optic type outdoor
910925866444	BGP293 LED240-4S/740 I DM11 48/60S	20,160 lm	4000 K	740 neutral white	160° - 42° x 54°	Distribution medium 11
910925866633	BGP293 LED240-4S/740 II DM50 D9 48/60S	20,160 lm	4000 K	740 neutral white	154° - 31° x 54°	Distribution medium 50
910925868815	BGP293 LED160-4S/740 II DM32 MSP CLO-DDF	13,795 lm	4000 K	740 neutral white	149° - 10° x 57°	Distribution medium 32
910925868816	BGP293 LED160-4S/740 II DM32 MSP CLO-DDF	13,795 lm	4000 K	740 neutral white	149° - 10° x 57°	Distribution medium 32
910925868817	BGP293 LED240-4S/740 II DM32 MSP CLO-DDF	20,470 lm	4000 K	740 neutral white	149° - 10° x 57°	Distribution medium 32
910925868818	BGP293 LED240-4S/740 II DM32 MSP CLO-DDF	20,470 lm	4000 K	740 neutral white	149° - 10° x 57°	Distribution medium 32
910925868935	BGP293 LED240-4S/730 II DM32 MSP SRG10 H	20,400 lm	3000 K	730 warm white	149° - 10° x 57°	Distribution medium 32
910925869853	BGP293 LED240-1P/740 UE II DM24P D9 48/6	20,400 lm	4000 K	740 neutral white	160° - 42° x 54°	Distribution medium 32
910925865677	BGP292 LED99-4S/740 I DX10 7024 D9 48/60	8,600 lm	4000 K	740 neutral white	150° - 43° x 67°	Distribution extra wide 10
910925866617	BGP292 LED80-4S/740 II DM50 D9 48/60S	6,960 lm	4000 K	740 neutral white	154° - 31° x 54°	Distribution medium 50
910925866628	BGP292 LED120-4S/740 II DM50 D9 48/60S	10,200 lm	4000 K	740 neutral white	154° - 31° x 54°	Distribution medium 50
910925866639	BGP292 LED120-4S/740 II DM11 48/60S	10,200 lm	4000 K	740 neutral white	160° - 42° x 54°	Distribution medium 11
910925866640	BGP292 LED85-4S/740 II DM11 48/60S	7,482 lm	4000 K	740 neutral white	160° - 42° x 54°	Distribution medium 11
910925866657	BGP392 LED120-4S/740 II DM11 D9 48/60S	10,200 lm	4000 K	740 neutral white	160° - 42° x 54°	Distribution medium 11
910925866697	BGP292 LED75-4S/740 I DX10 7024 D9 48/60	6,612 lm	4000 K	740 neutral white	150° - 43° x 67°	Distribution extra wide 10
910925866698	BGP292 LED49-4S/740 I DX10 7024 D9 48/60	4,263 lm	4000 K	740 neutral white	150° - 43° x 67°	Distribution extra wide 10
910925866705	BGP292 LED75-4S/740 I DX10 7024 D9 76S	6,612 lm	4000 K	740 neutral white	150° - 43° x 67°	Distribution extra wide 10
910925866766	BGP292 LED99-4S/740 I DX10 7024 D9 76S	8,600 lm	4000 K	740 neutral white	150° - 43° x 67°	Distribution extra wide 10
910925868107	BGP292 LED100-4S/730 II DM50 MSP 48/60S	8,600 lm	3000 K	730 warm white	154° - 31° x 54°	Distribution medium 50
910925868108	BGP292 LED100-4S/730 II DM50 48/60S	8,600 lm	3000 K	730 warm white	154° - 31° x 54°	Distribution medium 50
910925869852	BGP292 LED120-1P/740 UE II DM24P D9 48/6	10,320 lm	4000 K	740 neutral white	160° - 42° x 54°	Distribution medium 32

Order Code	Full Product Name	Luminous Flux	Correlated Color Temperature (Nom)	Light source color	Luminaire light beam spread	Optic type outdoor
910925870249	BGP392 LED120-1P/740 II DM65P FS 32/76P	10,560 lm	4000 K	740 neutral white	160° - 42° x 54°	Distribution medium version 65 Peformance (for 5050)
910925870251	BGP392 LED113-1P/730 II DM65P FS 32/76P	9,280 lm	3000 K	730 warm white	160° - 42° x 54°	Distribution medium version 65 Peformance (for 5050)
910925866667	BGP394 LED340-4S/740 II DM11 D9 48/60S P	29,240 lm	4000 K	740 neutral white	160° - 42° x 54°	Distribution medium 11
910925869854	BGP294 LED340-1P/740 UE II DM24P D9 48/6	28,560 lm	4000 K	740 neutral white	160° - 42° x 54°	Distribution medium 32
910925868105	BGP291 LED51-4S/730 II DM50 MSP 48/60S	4,524 lm	3000 K	730 warm white	154° - 31° x 54°	Distribution medium 50
910925868106	BGP291 LED51-4S/730 II DM50 48/60S	4,524 lm	3000 K	730 warm white	154° - 31° x 54°	Distribution medium 50
910925868811	BGP291 LED64-4S/740 II DM32 MSP CLO-DDF2	5,518 lm	4000 K	740 neutral white	149° - 10° x 57°	Distribution medium 32
910925868812	BGP291 LED64-4S/740 II DM32 MSP CLO-DDF2	5,518 lm	4000 K	740 neutral white	149° - 10° x 57°	Distribution medium 32
910925869851	BGP291 LED50-1P/740 UE II DM24P D9 48/60	4,350 lm	4000 K	740 neutral white	160° - 42° x 54°	Distribution medium 32
910925870248	BGP391 LED82-1P/740 II DM65P FS 32/76P	6,710 lm	4000 K	740 neutral white	160° - 42° x 54°	Distribution medium version 65 Peformance (for 5050)
910925870250	BGP391 LED78-1P/730 II DM65P FS 32/76P	6,210 lm	3000 K	730 warm white	160° - 42° x 54°	Distribution medium version 65 Peformance (for 5050)

Operating and Electrical

Order Code	Full Product Name	Power Consumption	Surge Protection (Common/Differential)
910925866444	BGP293 LED240-4S/740 I DM11 48/60S	138 W	Surge protection level until 6 kV differential mode and 8 kV common mode
910925866633	BGP293 LED240-4S/740 II DM50 D9 48/60S	138 W	Surge protection level until 6 kV differential mode and 8 kV common mode
910925868815	BGP293 LED160-4S/740 II DM32 MSP CLO-DDF	91 W	Surge protection level until 6 kV differential mode and 8 kV common mode
910925868816	BGP293 LED160-4S/740 II DM32 MSP CLO-DDF	91 W	Surge protection level until 6 kV differential mode and 8 kV common mode
910925868817	BGP293 LED240-4S/740 II DM32 MSP CLO-DDF	136 W	Surge protection level until 6 kV differential mode and 8 kV common mode

Order Code	Full Product Name	Power Consumption	Surge Protection (Common/Differential)
910925868818	BGP293 LED240-4S/740 II DM32 MSP CLO-DDF	136 W	Surge protection level until 6 kV differential mode and 8 kV common mode
910925868935	BGP293 LED240-4S/730 II DM32 MSP SRG10 H	154 W	Surge protection level until 10 kV differential mode and 10 kV common mode
910925869853	BGP293 LED240-1P/740 UE II DM24P D9 48/6	118 W	Surge protection level until 6 kV differential mode and 8 kV common mode
910925865677	BGP292 LED99-4S/740 I DX10 7024 D9 48/60	60 W	Surge protection level until 6 kV differential mode and 8 kV common mode
910925866617	BGP292 LED80-4S/740 II DM50 D9 48/60S	47 W	Surge protection level until 6 kV differential mode and 8 kV common mode
910925866628	BGP292 LED120-4S/740 II DM50 D9 48/60S	70 W	Surge protection level until 6 kV differential mode and 8 kV common mode
910925866639	BGP292 LED120-4S/740 II DM11 48/60S	70 W	Surge protection level until 6 kV differential mode and 8 kV common mode
910925866640	BGP292 LED85-4S/740 II DM11 48/60S	50 W	Surge protection level until 6 kV differential mode and 8 kV common mode
910925866657	BGP392 LED120-4S/740 II DM11 D9 48/60S	70 W	Surge protection level until 6 kV differential mode and 8 kV common mode
910925866697	BGP292 LED75-4S/740 I DX10 7024 D9 48/60	44 W	Surge protection level until 6 kV differential mode and 8 kV common mode
910925866698	BGP292 LED49-4S/740 I DX10 7024 D9 48/60	29 W	Surge protection level until 6 kV differential mode and 8 kV common mode
910925866705	BGP292 LED75-4S/740 I DX10 7024 D9 76S	44 W	Surge protection level until 6 kV differential mode and 8 kV common mode
910925866766	BGP292 LED99-4S/740 I DX10 7024 D9 76S	60 W	Surge protection level until 6 kV differential mode and 8 kV common mode
910925868107	BGP292 LED100-4S/730 II DM50 MSP 48/60S	61 W	Surge protection level until 6 kV differential mode and 8 kV common mode
910925868108	BGP292 LED100-4S/730 II DM50 48/60S	61 W	Surge protection level until 6 kV differential mode and 8 kV common mode
910925869852	BGP292 LED120-1P/740 UE II DM24P D9 48/6	60 W	Surge protection level until 6 kV differential mode and 8 kV common mode
910925870249	BGP392 LED120-1P/740 II DM65P FS 32/76P	61 W	Surge protection level until 6 kV differential mode and 8 kV common mode
910925870251	BGP392 LED113-1P/730 II DM65P FS 32/76P	56 W	Surge protection level until 6 kV differential mode and 8 kV common mode
910925866667	BGP394 LED340-4S/740 II DM11 D9 48/60S P	186 W	Surge protection level until 6 kV differential mode and 8 kV common mode
910925869854	BGP294 LED340-1P/740 UE II DM24P D9 48/6	168 W	Surge protection level until 6 kV differential mode and 8 kV common mode
910925868105	BGP291 LED51-4S/730 II DM50 MSP 48/60S	32.5 W	Surge protection level until 6 kV differential mode and 8 kV common mode
910925868106	BGP291 LED51-4S/730 II DM50 48/60S	32.5 W	Surge protection level until 6 kV differential mode and 8 kV common mode
910925868811	BGP291 LED64-4S/740 II DM32 MSP CLO-DDF2	39 W	Surge protection level until 6 kV differential mode and 8 kV common mode
910925868812	BGP291 LED64-4S/740 II DM32 MSP CLO-DDF2	39 W	Surge protection level until 6 kV differential mode and 8 kV common mode

Order Code	Full Product Name	Power Consumption	Surge Protection (Common/Differential)
910925869851	BGP291 LED50-1P/740 UE II DM24P D9 48/60	26 W	Surge protection level until 6 kV differential mode and 8 kV common mode
910925870248	BGP391 LED82-1P/740 II DM65P FS 32/76P	40 W	Surge protection level until 6 kV differential mode and 8 kV common mode
910925870250	BGP391 LED78-1P/730 II DM65P FS 32/76P	40 W	Surge protection level until 6 kV differential mode and 8 kV common mode

Controls and Dimming

Order Code	Full Product Name	Dimmable	Maximum dim level
910925866444	BGP293 LED240-4S/740 I DM11 48/60S	No	0% (digital)
910925866633	BGP293 LED240-4S/740 II DM50 D9 48/60S	No	0% (digital)
910925868815	BGP293 LED160-4S/740 II DM32 MSP CLO-DDF	Yes	50%
910925868816	BGP293 LED160-4S/740 II DM32 MSP CLO-DDF	Yes	50%
910925868817	BGP293 LED240-4S/740 II DM32 MSP CLO-DDF	Yes	50%
910925868818	BGP293 LED240-4S/740 II DM32 MSP CLO-DDF	Yes	50%
910925868935	BGP293 LED240-4S/730 II DM32 MSP SRG10 H	No	0% (digital)
910925869853	BGP293 LED240-1P/740 UE II DM24P D9 48/6	Yes	0% (digital)
910925865677	BGP292 LED99-4S/740 I DX10 7024 D9 48/60	Yes	0% (digital)
910925866617	BGP292 LED80-4S/740 II DM50 D9 48/60S	No	0% (digital)
910925866628	BGP292 LED120-4S/740 II DM50 D9 48/60S	No	0% (digital)
910925866639	BGP292 LED120-4S/740 II DM11 48/60S	No	0% (digital)
910925866640	BGP292 LED85-4S/740 II DM11 48/60S	No	0% (digital)
910925866657	BGP392 LED120-4S/740 II DM11 D9 48/60S	No	0% (digital)
910925866697	BGP292 LED75-4S/740 I DX10 7024 D9 48/60	Yes	0% (digital)
910925866698	BGP292 LED49-4S/740 I DX10 7024 D9 48/60	Yes	0% (digital)
910925866705	BGP292 LED75-4S/740 I DX10 7024 D9 76S	Yes	0% (digital)
910925866766	BGP292 LED99-4S/740 I DX10 7024 D9 76S	Yes	0% (digital)
910925868107	BGP292 LED100-4S/730 II DM50 MSP 48/60S	No	Programmable
910925868108	BGP292 LED100-4S/730 II DM50 48/60S	No	Programmable
910925869852	BGP292 LED120-1P/740 UE II DM24P D9 48/6	Yes	0% (digital)
910925870249	BGP392 LED120-1P/740 II DM65P FS 32/76P	Yes	0% (digital)
910925870251	BGP392 LED113-1P/730 II DM65P FS 32/76P	Yes	0% (digital)
910925866667	BGP394 LED340-4S/740 II DM11 D9 48/60S P	No	0% (digital)
910925869854	BGP294 LED340-1P/740 UE II DM24P D9 48/6	Yes	0% (digital)
910925868105	BGP291 LED51-4S/730 II DM50 MSP 48/60S	No	Programmable
910925868106	BGP291 LED51-4S/730 II DM50 48/60S	No	Programmable
910925868811	BGP291 LED64-4S/740 II DM32 MSP CLO-DDF2	Yes	50%
910925868812	BGP291 LED64-4S/740 II DM32 MSP CLO-DDF2	Yes	50%

Order Code	Full Product Name	Dimmable	Maximum dim level
910925869851	BGP291 LED50-1P/740 UE II DM24P D9 48/60	Yes	0% (digital)
910925870248	BGP391 LED82-1P/740 II DM65P FS 32/76P	Yes	0% (digital)
910925870250	BGP391 LED78-1P/730 II DM65P FS 32/76P	Yes	0% (digital)

Mechanical and Housing

Order Code	Full Product Name	Housing Color	Mech. impact protection code
910925866444	BGP293 LED240-4S/740 I DM11 48/60S	Gray	IK09
910925866633	BGP293 LED240-4S/740 II DM50 D9 48/60S	Gray	IK09
910925868815	BGP293 LED160-4S/740 II DM32 MSP CLO-DDF	Grey	IK09
910925868816	BGP293 LED160-4S/740 II DM32 MSP CLO-DDF	Grey	IK09
910925868817	BGP293 LED240-4S/740 II DM32 MSP CLO-DDF	Grey	IK09
910925868818	BGP293 LED240-4S/740 II DM32 MSP CLO-DDF	Grey	IK09
910925868935	BGP293 LED240-4S/730 II DM32 MSP SRG10 H	Grey	IK09
910925869853	BGP293 LED240-1P/740 UE II DM24P D9 48/6	Grey	IK08
910925865677	BGP292 LED99-4S/740 I DX10 7024 D9 48/60	Gray	IK09
910925866617	BGP292 LED80-4S/740 II DM50 D9 48/60S	Gray	IK09
910925866628	BGP292 LED120-4S/740 II DM50 D9 48/60S	Gray	IK09
910925866639	BGP292 LED120-4S/740 II DM11 48/60S	Gray	IK09
910925866640	BGP292 LED85-4S/740 II DM11 48/60S	Gray	IK09
910925866657	BGP392 LED120-4S/740 II DM11 D9 48/60S	Gray	IK09
910925866697	BGP292 LED75-4S/740 I DX10 7024 D9 48/60	Gray	IK09
910925866698	BGP292 LED49-4S/740 I DX10 7024 D9 48/60	Gray	IK09
910925866705	BGP292 LED75-4S/740 I DX10 7024 D9 76S	Gray	IK09
910925866766	BGP292 LED99-4S/740 I DX10 7024 D9 76S	Gray	IK09
910925868107	BGP292 LED100-4S/730 II DM50 MSP 48/60S	Gray	IK09
910925868108	BGP292 LED100-4S/730 II DM50 48/60S	Gray	IK09
910925869852	BGP292 LED120-1P/740 UE II DM24P D9 48/6	Grey	IK08
910925870249	BGP392 LED120-1P/740 II DM65P FS 32/76P	Grey	IK09
910925870251	BGP392 LED113-1P/730 II DM65P FS 32/76P	Grey	IK09
910925866667	BGP394 LED340-4S/740 II DM11 D9 48/60S P	Gray	IK09
910925869854	BGP294 LED340-1P/740 UE II DM24P D9 48/6	Grey	IK08
910925868105	BGP291 LED51-4S/730 II DM50 MSP 48/60S	Gray	IK09
910925868106	BGP291 LED51-4S/730 II DM50 48/60S	Gray	IK09
910925868811	BGP291 LED64-4S/740 II DM32 MSP CLO-DDF2	Grey	IK09
910925868812	BGP291 LED64-4S/740 II DM32 MSP CLO-DDF2	Grey	IK09
910925869851	BGP291 LED50-1P/740 UE II DM24P D9 48/60	Grey	IK08
910925870248	BGP391 LED82-1P/740 II DM65P FS 32/76P	Grey	IK09
910925870250	BGP391 LED78-1P/730 II DM65P FS 32/76P	Grey	IK09

Product Data

Order Code	Full Product Name	Product family code
910925866444	BGP293 LED240-4S/740 I DM11 48/60S	BGP293
910925866633	BGP293 LED240-4S/740 II DM50 D9 48/60S	BGP293
910925868815	BGP293 LED160-4S/740 II DM32 MSP CLO-DDF	BGP293
910925868816	BGP293 LED160-4S/740 II DM32 MSP CLO-DDF	BGP293
910925868817	BGP293 LED240-4S/740 II DM32 MSP CLO-DDF	BGP293
910925868818	BGP293 LED240-4S/740 II DM32 MSP CLO-DDF	BGP293
910925868935	BGP293 LED240-4S/730 II DM32 MSP SRG10 H	BGP293
910925869853	BGP293 LED240-1P/740 UE II DM24P D9 48/6	BGP293
910925865677	BGP292 LED99-4S/740 I DX10 7024 D9 48/60	BGP292
910925866617	BGP292 LED80-4S/740 II DM50 D9 48/60S	BGP292
910925866628	BGP292 LED120-4S/740 II DM50 D9 48/60S	BGP292
910925866639	BGP292 LED120-4S/740 II DM11 48/60S	BGP292
910925866640	BGP292 LED85-4S/740 II DM11 48/60S	BGP292
910925866657	BGP392 LED120-4S/740 II DM11 D9 48/60S	BGP392
910925866697	BGP292 LED75-4S/740 I DX10 7024 D9 48/60	BGP292
910925866698	BGP292 LED49-4S/740 I DX10 7024 D9 48/60	BGP292
910925866705	BGP292 LED75-4S/740 I DX10 7024 D9 76S	BGP292
910925866766	BGP292 LED99-4S/740 I DX10 7024 D9 76S	BGP292
910925868107	BGP292 LED100-4S/730 II DM50 MSP 48/60S	BGP292
910925868108	BGP292 LED100-4S/730 II DM50 48/60S	BGP292
910925869852	BGP292 LED120-1P/740 UE II DM24P D9 48/6	BGP292
910925870249	BGP392 LED120-1P/740 II DM65P FS 32/76P	BGP392
910925870251	BGP392 LED113-1P/730 II DM65P FS 32/76P	BGP392
910925866667	BGP394 LED340-4S/740 II DM11 D9 48/60S P	BGP394
910925869854	BGP294 LED340-1P/740 UE II DM24P D9 48/6	BGP294
910925868105	BGP291 LED51-4S/730 II DM50 MSP 48/60S	BGP291
910925868106	BGP291 LED51-4S/730 II DM50 48/60S	BGP291
910925868811	BGP291 LED64-4S/740 II DM32 MSP CLO-DDF2	BGP291
910925868812	BGP291 LED64-4S/740 II DM32 MSP CLO-DDF2	BGP291
910925869851	BGP291 LED50-1P/740 UE II DM24P D9 48/60	BGP291
910925870248	BGP391 LED82-1P/740 II DM65P FS 32/76P	BGP391
910925870250	BGP391 LED78-1P/730 II DM65P FS 32/76P	BGP391

Polar normal diagrams

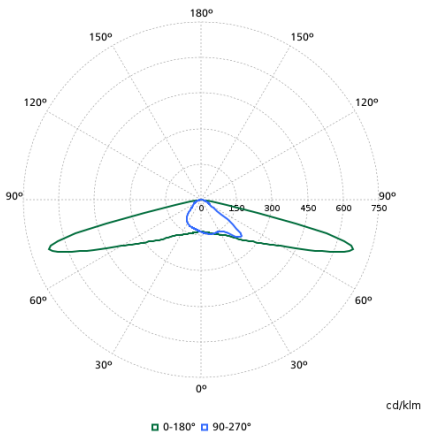

BGP282I - 910925866628

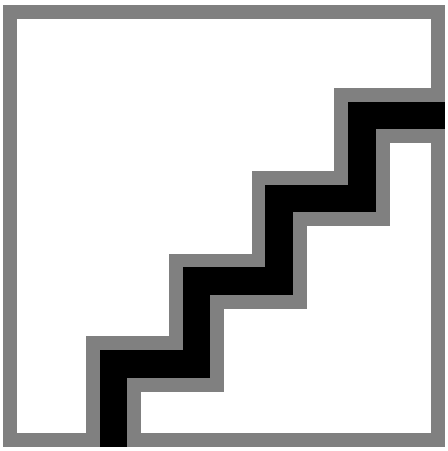

BGP282I - 910925866697

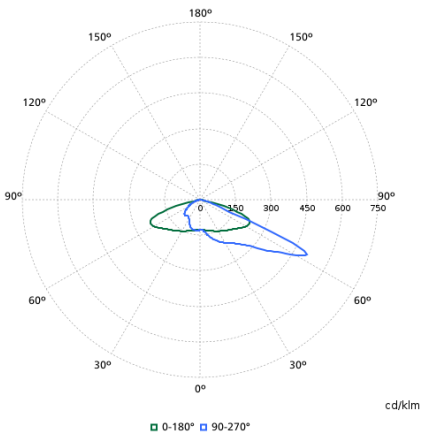

BGP282I - 910925866698

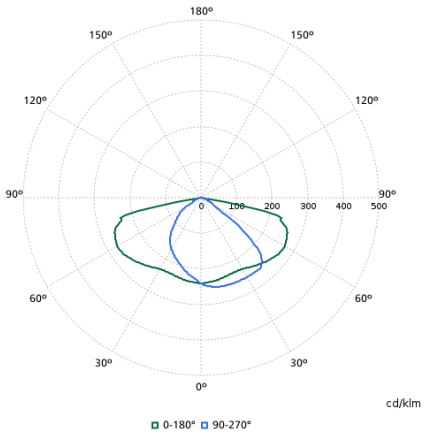

BGP284I - 910925866667

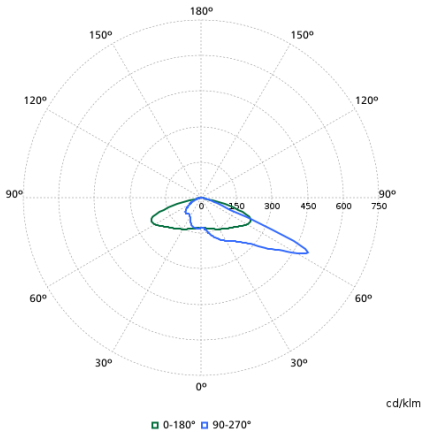

BGP282I - 910925865677

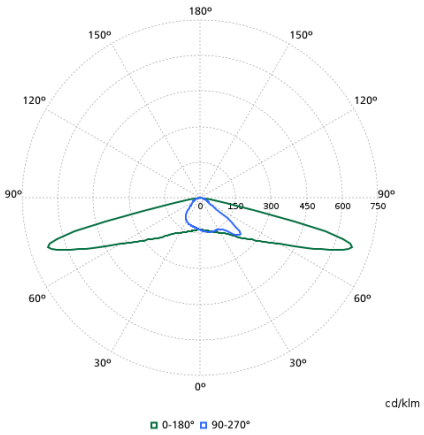

BGP282I - 910925866617

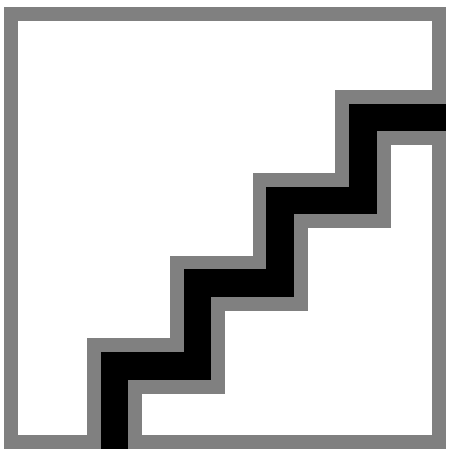

BGP282I - 910925866642

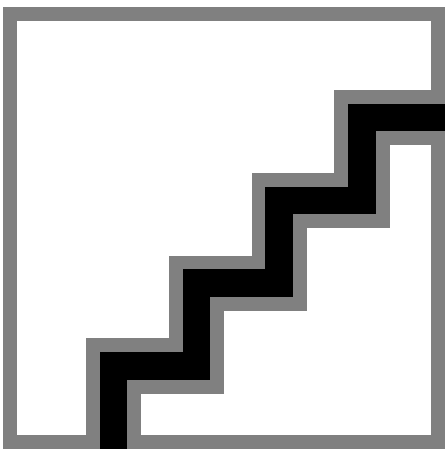

BGP282I - 910925866657

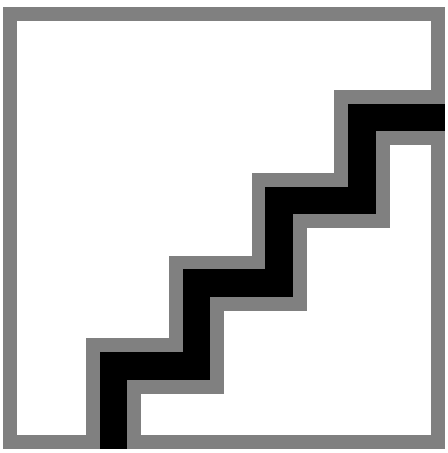

BGP283I - 910925866633

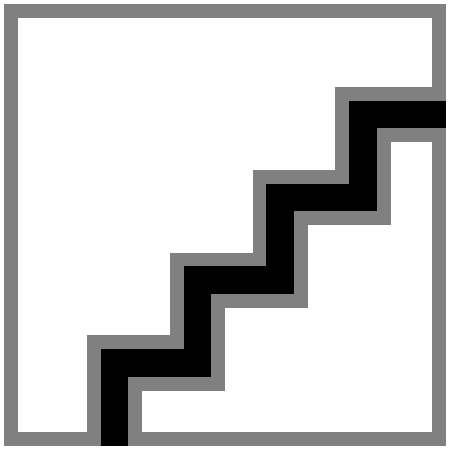

BGP283I - 910925868818

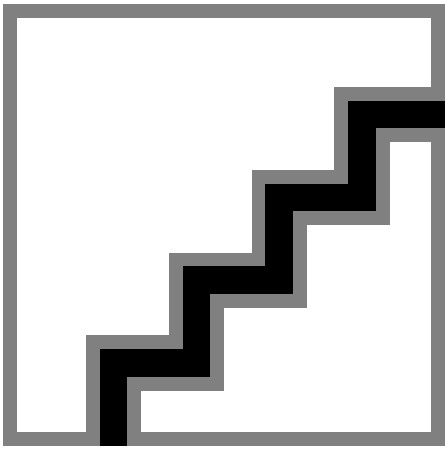

BGP281I - 910925868811

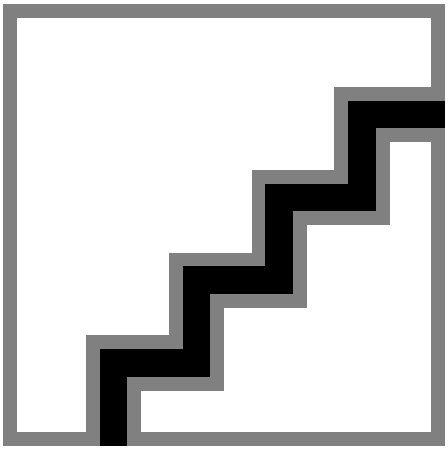

BGP283I - 910925868815

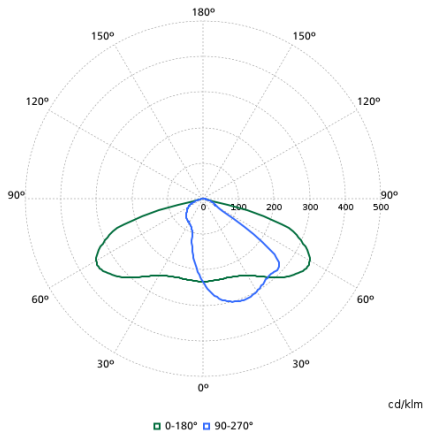

BGP283I - 910925868935

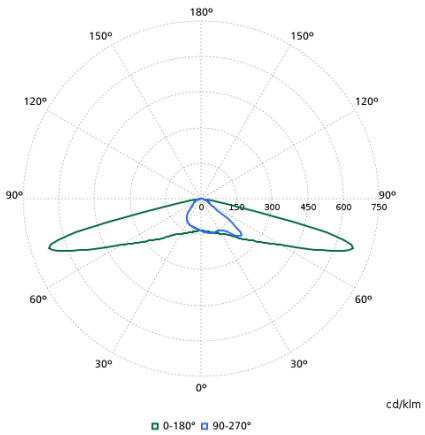

BGP281I - 910925868105

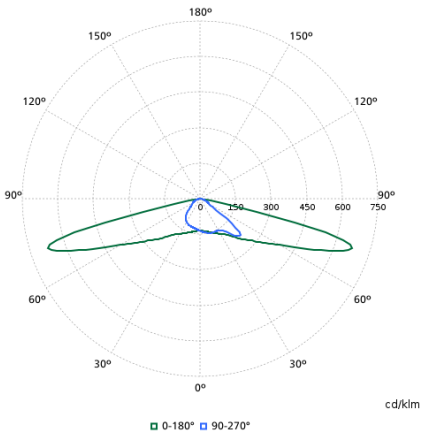

BGP282I - 910925868107

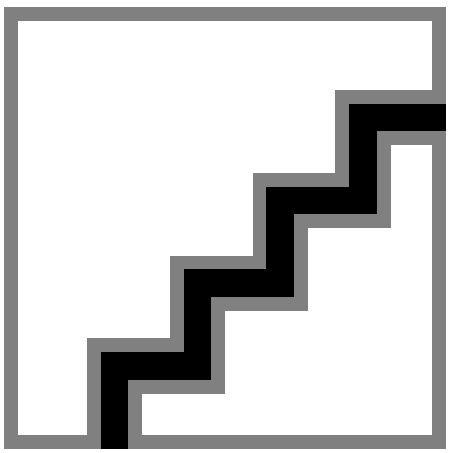

BGP293 LED240-1P/740
UE II DM24P D9 48/6 910925869853

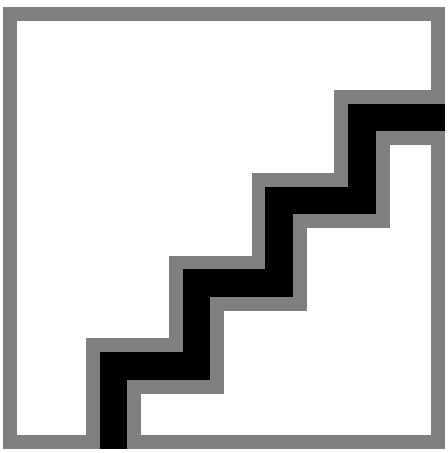

BGP294 LED340-1P/740
UE II DM24P D9 48/6 910925869854

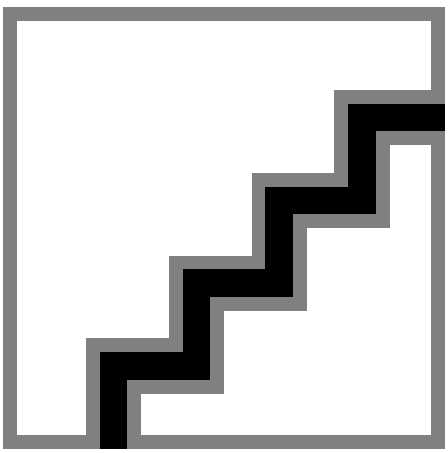

BGP292 LED120-1P/740
UE II DM24P D9 48/6 910925869852

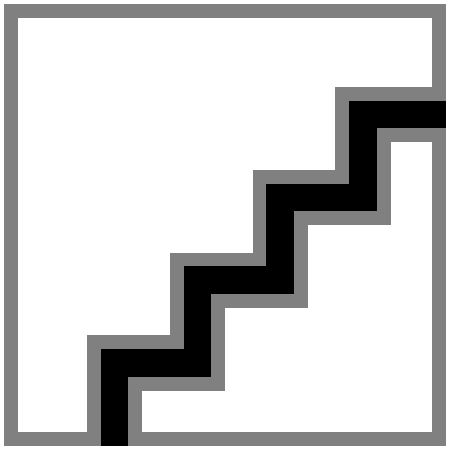

BGP291 LED50-1P/740
UE II DM24P D9 48/60
910925869851

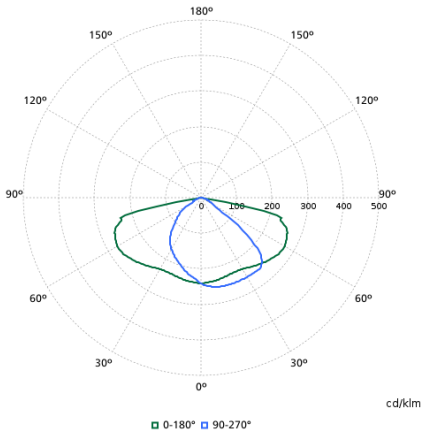

BGP293 LED240-4S/740 I DM11
48/60S 910925866444

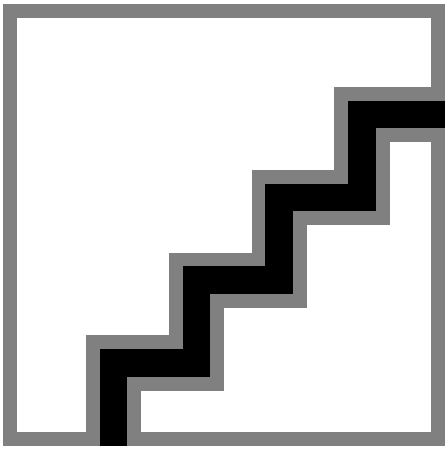

BGP292 LED120-4S/740 II DM11
48/60S 910925866639

© 2026 Signify Holding. All rights reserved. The information provided herein is subject to change, without notice. Signify does not give any representation or warranty as to the accuracy or completeness of the information included herein and shall not be liable for any action in reliance thereon. The information presented in this document is not intended as any commercial offer and does not form part of any quotation or contract, unless otherwise agreed by Signify. All trademarks are owned by Signify Holding or their respective owners.