PHILIPS

WT050C 1xTLED L600

911401812187



Ledinaire Waterproof Tube Housing

IP65 | Dust penetration-protected, jet-proof, IK08 | 5 J vandal-protected

General Information

Value ladder	Value
Warranty period	5 years

Mechanical and Housing

Overall length	670 mm
Overall width	69 mm
Overall height	70 mm
Overall diameter	0 mm
Dimensions (Height x Width x Depth)	70 x 69 x 670 mm
Material	Polycarbonate
Ingress protection code	IP65 [Dust penetration-protected, jet-proof]
Mech. impact protection code	IK08 [5 J vandal-protected]
Accessory color	Gray
Net Weight (Piece)	0.400 kg

Approval and Application

CE mark	Yes
EU RoHS compliant	Yes

Sustainability Data

Non-virgin material ratio of the packaging	Cardboard > 80% recycled
Packaging Recyclable content ratio	Cardboard recycling rate > 80%
Packaging Material	Cardboard

Product Data

Order product name	WT050C 1xTLED L600
Full product name	WT050C 1xTLED L600
Full product code	872016975324299
Order code	911401812187
Material Nr. (12NC)	911401812187
Numerator - Quantity Per Pack	1
EAN/UPC - Product/Case	8720169753242
Numerator - Packs per outer box	16
EAN/UPC - Case	8720169753334

Dimensional drawing

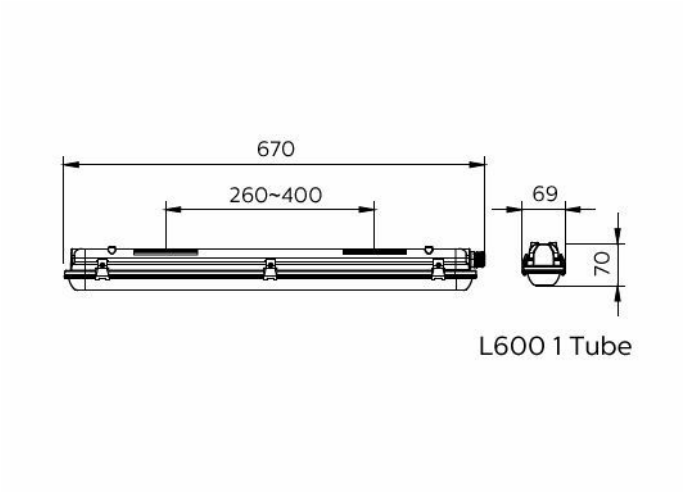

Compatible Accesories

Accessory Image	Accessory Code	Accessory Name	Website
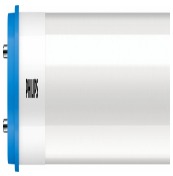	929003158602	CorePro LEDtube 600mm HO 8W 840 T8	Product Website
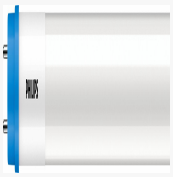	929003547202	CorePro LEDtube 600mm 8W 840 T8	Product Website

Related Documents

Documents and certificates	Document Name	Download
Installation Instructions	WT050C-MI-v2024-01.pdf	Download

© 2026 Signify Holding. All rights reserved. The information provided herein is subject to change, without notice. Signify does not give any representation or warranty as to the accuracy or completeness of the information included herein and shall not be liable for any action in reliance thereon. The information presented in this document is not intended as any commercial offer and does not form part of any quotation or contract, unless otherwise agreed by Signify. Philips and the Philips Shield Emblem are registered trademarks of Koninklijke Philips N.V.