PHILIPS

GreenSpace Accent Fixed Gen2

RS350B



GreenSpace Accent Fixed Gen2: A serviceable and upgradeable accent downlight for retail

With GreenSpace Accent Fixed Gen2, retailers and building operators can enjoy the superior quality of light and market-leading energy efficiency of PerfectAccent optics in an affordable and sustainable accent downlighter. Maintenance and upgrades of the driver, LED and optics is easy and requires only standard tools. Because of this, GreenSpace Accent Fixed Gen2 can support a circular lighting installation. In addition to dimming options, multiple system integration options are available, including wired and wireless. Fresh food LED lighting recipes are available for prolonged shelf life, better visual representation of food, reduction of food waste and increased sales. Check out our Fashion and Food catalog pages to find out more about our PremiumWhite, PremiumColor, Fresh Meat, Rosé, Frost and Champagne recipes.

Benefits

- More sparkle and enhanced shopper eye comfort with PerfectAccent optics
- Extend the useful life of the product with easy maintenance and upgrades
- The neutral clean product design helps blend in with the ceiling

Applications

- Supermarkets and hypermarkets
- Large retail
- Shopping malls

Features

- Serviceable and upgradeable with standard tools
- Equipped with state-of-the-art PerfectAccent reflector optics

- Reduced carbon footprint due to high efficacy
- Available with fresh food LED lighting recipes and LED flavors
- Wired (DALI) and wireless connectivity options
- Optional front glass (recommended for dusty environments)

- All photometrical data is calculated without optional front glass. Flux should be reduced by 3.5% when using front glass.
- Cleaning of the optic should be done only with pressurized air. Touching the LED or reflector is forbidden. For food preparation areas and areas with high levels of dust, we strongly advise the use of the optional front glass, as it can be cleaned with a dry microfiber cloth.

- During maintenance, the product must be switched off and cooled down.
- The product must be installed out of arm's reach. Manipulating the product when hot is possible only with an insulated glove.

Versions



RS350B GreenSpace Accent Fixed Black standard



RS350B GreenSpace Accent Fixed White standard

Dimensional drawing

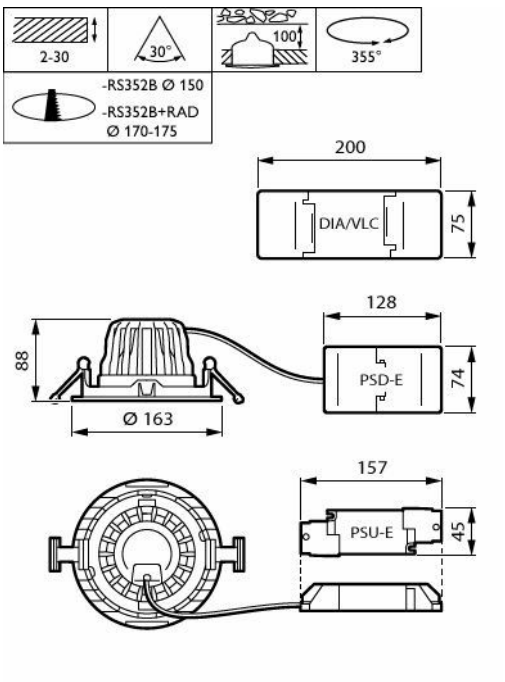

RS350B 27S/840 PSU-E WB WH

Product details



GreenSpace Accent Fixed is fully serviceable and upgradeable



RS350B GreenSpace Accent Fixed White standard



RS350B GreenSpace Accent Fixed Black standard

General Information

Light source replaceable	Yes
Number of gear units	1 unit
Driver included	Yes
Service tag	Yes

Light Technical

Beam angle of light source	120 degree(s)
Optic type	Wide beam

Operating and Electrical

Input Voltage	220 to 240 V
Line Frequency	50 to 60 Hz
Suitable for random switching	Yes
Protection class IEC	Safety class II

Mechanical and Housing

Ingress protection code	IP20 [Finger-protected]
Mech. impact protection code	IK02 [0.2 J standard]
Explosion hazard class	-

Emergency Operation

Central Emergency	No

Approval and Application

Glow-wire test	Temperature 650 °C, duration 30 s
Flammability mark	-
CE mark	Yes
ENEC mark	ENEC mark
Flickering value (PstLM) - Flickering value as per EN 61000-3-3	0.9
Ambient temperature range	+10 to +35 °C

Initial Performance (IEC Compliant)

Luminous flux tolerance	-10% / +10%

Product Data

Product family code	RS350B [GreenSpace Accent Fixed G2]

Light Technical

Order Code	Full Product Name	Luminous Flux	Correlated Color Temperature (Nom)	Luminous Efficacy (rated) (Nom)	Color rendering index (CRI)
910505102749	RS350B 39S/PW930 WIA-E WB BK	4,000 lm	3000 K	125 lm/W	>90
910505102741	RS350B 27S/830 PSU-E WB WH	2,700 lm	3000 K	138 lm/W	>80
910505102742	RS350B 27S/840 PSU-E WB WH	2,800 lm	4000 K	143 lm/W	>80
910505102745	RS350B 27S/PC930 WIA-E WB FG WH	2,800 lm	3000 K	112 lm/W	>90
910505102748	RS350B 39S/PW930 DIA-VLC-E WB WH	4,000 lm	3000 K	125 lm/W	>90

Operating and Electrical

Order Code	Full Product Name	Power Consumption
910505102749	RS350B 39S/PW930 WIA-E WB BK	32 W
910505102741	RS350B 27S/830 PSU-E WB WH	19.6 W
910505102742	RS350B 27S/840 PSU-E WB WH	19.6 W
910505102745	RS350B 27S/PC930 WIA-E WB FG WH	25 W
910505102748	RS350B 39S/PW930 DIA-VLC-E WB WH	32 W

Controls and Dimming

Order Code	Full Product Name	Dimmable	Maximum dim level
910505102749	RS350B 39S/PW930 WIA-E WB BK	Yes	10%
910505102741	RS350B 27S/830 PSU-E WB WH	No	Not applicable
910505102742	RS350B 27S/840 PSU-E WB WH	No	Not applicable
910505102745	RS350B 27S/PC930 WIA-E WB FG WH	Yes	10%
910505102748	RS350B 39S/PW930 DIA-VLC-E WB WH	Yes	1%

Mechanical and Housing

Order Code	Full Product Name	Housing Color
910505102749	RS350B 39S/PW930 WIA-E WB BK	Black
910505102741	RS350B 27S/830 PSU-E WB WH	White
910505102742	RS350B 27S/840 PSU-E WB WH	White
910505102745	RS350B 27S/PC930 WIA-E WB FG WH	White
910505102748	RS350B 39S/PW930 DIA-VLC-E WB WH	White

Initial Performance (IEC Compliant)

Order Code	Full Product Name	Initial chromaticity
910505102749	RS350B 39S/PW930 WIA-E WB BK	(0.422, 0.386) SDCM <2
910505102741	RS350B 27S/830 PSU-E WB WH	(0.434, 0.403) SDCM <2
910505102742	RS350B 27S/840 PSU-E WB WH	(0.382, 0.380) SDCM <2
910505102745	RS350B 27S/PC930 WIA-E WB FG WH	(0.422, 0.386) SDCM <2
910505102748	RS350B 39S/PW930 DIA-VLC-E WB WH	(0.422, 0.386) SDCM <2

Polar normal diagrams

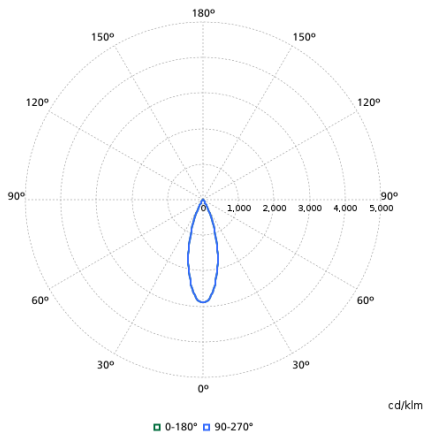

RS350B 27S/PC930 WIA-E WB FG WH
910505102745

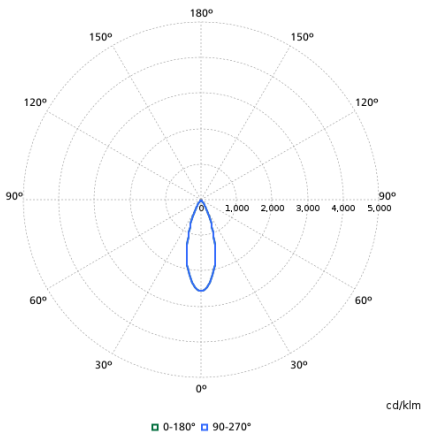

RS350B 39S/PW930 DIA-VLC-E WB WH
910505102748

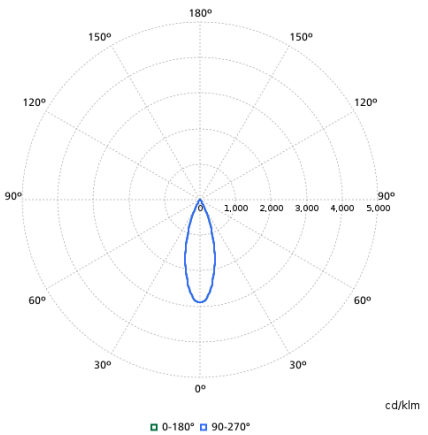

RS350B 27S/830 PSU-E WB WH
910505102741

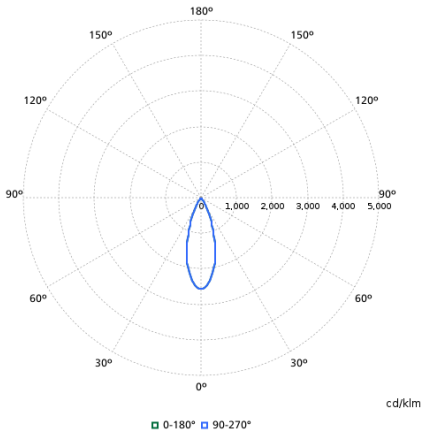

RS350B 39S/PW930 WIA-E WB BK
910505102749

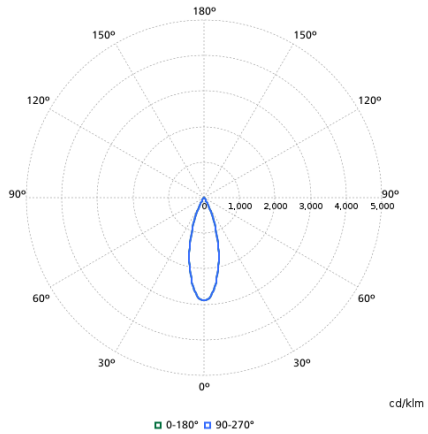

RS350B 27S/840 PSU-E WB WH
910505102742

© 2026 Signify Holding. All rights reserved. The information provided herein is subject to change, without notice. Signify does not give any representation or warranty as to the accuracy or completeness of the information included herein and shall not be liable for any action in reliance thereon. The information presented in this document is not intended as any commercial offer and does not form part of any quotation or contract, unless otherwise agreed by Signify. Philips and the Philips Shield Emblem are registered trademarks of Koninklijke Philips N.V.