PHILIPS

GreenSpace Flex Luna

RS378B_PRO



GreenSpace Flex Luna – Bringing moonlight inside.

Ever-changing yet dependable, the moon reflects the very essence of hospitality lighting, which is adaptable, elegant, and always in tune with its surroundings. GreenSpace Flex Luna is designed to evoke a unique sensation. Like the moon, Luna does not overpower but enhances its surroundings, casting a glow that feels both intimate and grand. It is not just a light. It is an intimate experience.

Benefits

- Sustainable, more light with less energy consumption, up to 120lm/W.
- Silent brilliance with superior visual comfort.
- Deliver light that speaks luxury, supported by superior color consistency and beam control.
- Comprehensive family offering, maintain effortlessly with ceiling proof design.

Applications

- Hospitality
- Retail
- Offices
- General indoor space

Features

- Leading lm/W, up to 120lm/W on luminaire level.
- 40° cut off angle and UGR19 for major variants.

- Leading color performance, with CRI92, R9>50.
- Super color consistency, SDCM 3 on luminaire level and SDCM 2 on COB level.
- Modular design concept, supporting strong customization and flexibility on family level, covering cut out(D35 to D100), optics (12° to 55°), controls (PSU, PSD, 1-10V, WIA) and customized reflector and front ring color options.

Versions



GreenSpace Flex Luna



GreenSpace Flex Luna



GreenSpace Flex Luna



GreenSpace Flex Luna



GreenSpace Flex Luna



GreenSpace Flex Luna



GreenSpace Flex Luna



GreenSpace Flex Luna



GreenSpace Flex Luna





GreenSpace Flex Luna



GreenSpace Flex Luna



GreenSpace Flex Luna



GreenSpace Flex Luna

Dimensional drawing

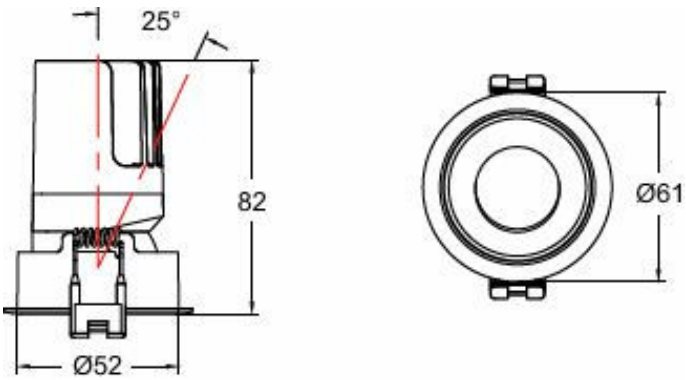

RS378B P7 930 PSD MB WP D55 M-WH PROCAU

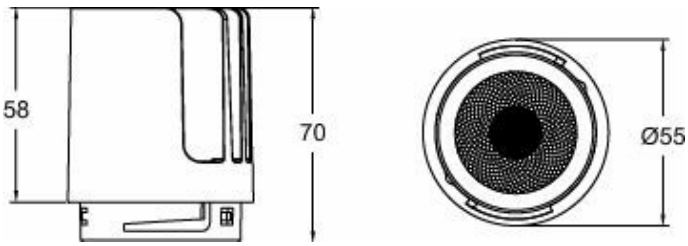

RS378B P13 930 PSD-E WB M55 PRO

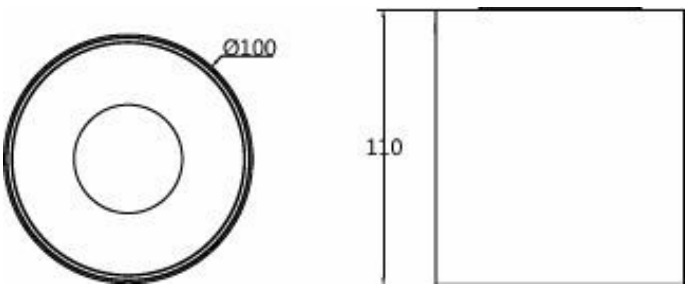

SM378B R P14 930 PSD-E WB D100 G-TT PRO

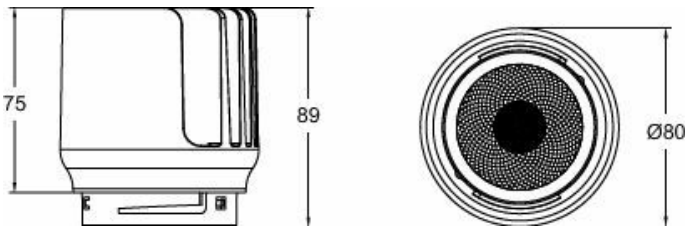

RS378X P28 930 WIA MB M70 PRO

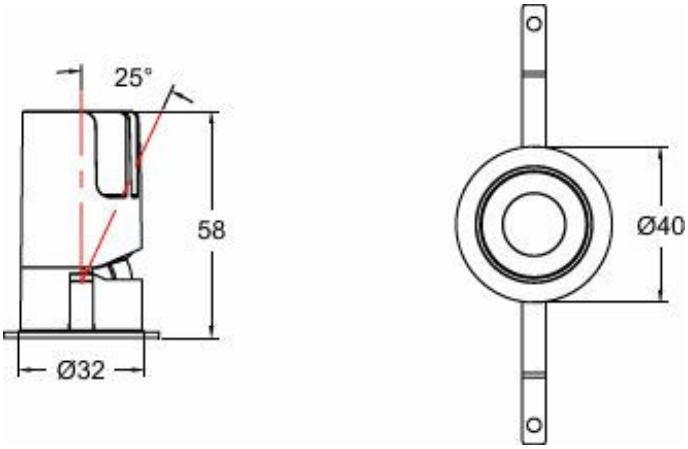

RS378B P5 927 PSD-E MB D35 G-TT PRO

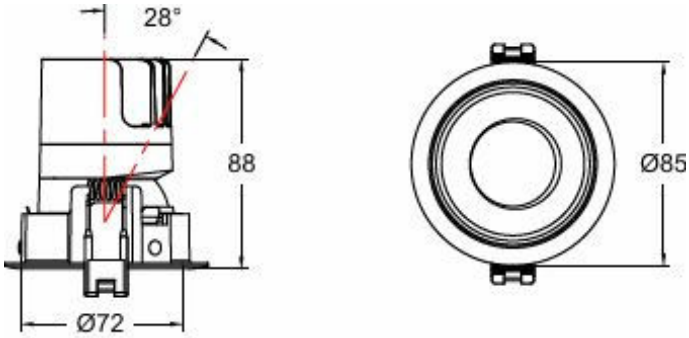

RS378B P9 930 PSD VWB WP D75 G-TT PROCAU

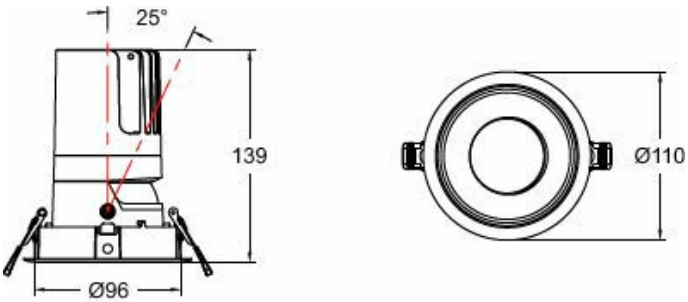

RS378B P12 930 PSD MB WP D100M-WHPROCAU

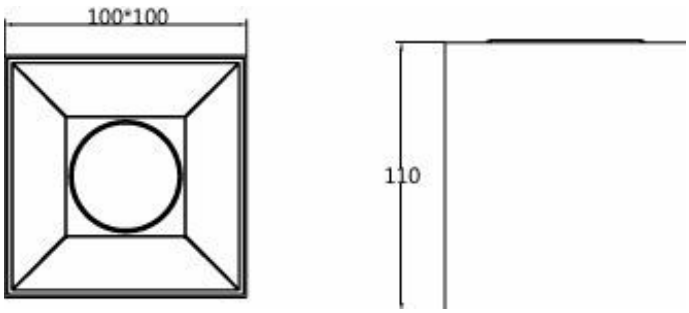

SM378B S P20 927 PSD-E WB D100 G-TT PRO

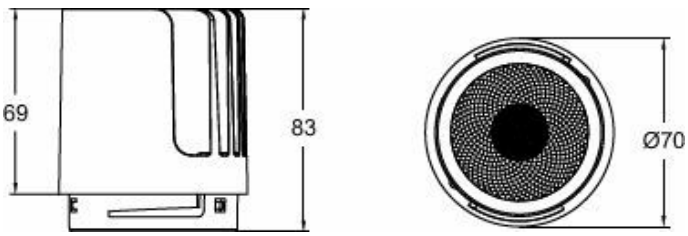

RS378B P19 927 PSU-E NB M70 PRO

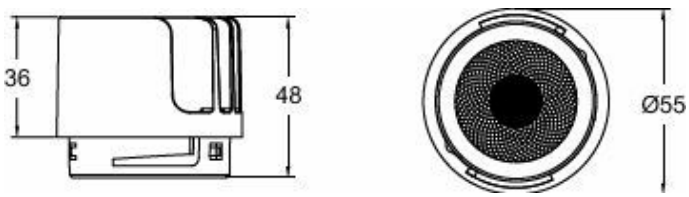

RS378B P7 927 PSU-E SNB M55 PRO

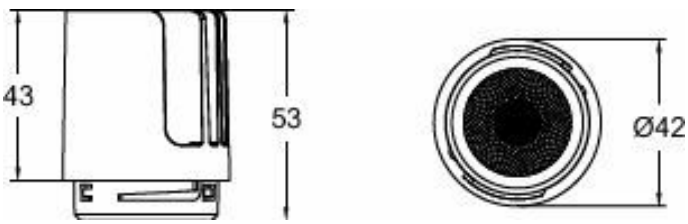

RS378B P8 930 PSU-E WB M43 WP PRO

General Information

Driver included	Yes

Operating and Electrical

Input Voltage	220 to 240 V
Line Frequency	50 or 60 Hz
Protection class IEC	Safety class II

Mechanical and Housing

Mech. impact protection code	IK03 [0.35 J reinforced]
Optical cover type	Lens

Approval and Application

ENEC mark	-
Ambient temperature range	-20 to +45 °C

Initial Performance (IEC Compliant)

Luminous flux tolerance	-10% / +10%

Light Technical

Order Code	Full Product Name	Luminous Flux	Correlated Color Temperature (Nom)	Luminous Efficacy (rated) (Nom)	Color rendering index (CRI)
911401521646	SM378B R P8 927 PSU-E NB D100 G-TT PRO	955 lm	2700 K	122 lm/W	92
911401521746	SM378B R P8 930 PSU-E NB D100 G-TT PRO	1,015 lm	3000 K	130 lm/W	92
911401521846	SM378B R P8 940 PSU-E NB D100 G-TT PRO	1,045 lm	4000 K	134 lm/W	92
911401521946	SM378B R P8 927 PSU-E MB D100 G-TT PRO	900 lm	2700 K	115 lm/W	92
911401522046	SM378B R P8 930 PSU-E MB D100 G-TT PRO	965 lm	3000 K	124 lm/W	92
911401522146	SM378B R P8 940 PSU-E MB D100 G-TT PRO	990 lm	4000 K	127 lm/W	92
911401522246	SM378B R P8 927 PSU-E WB D100 G-TT PRO	875 lm	2700 K	112 lm/W	92
911401522346	SM378B R P8 930 PSU-E WB D100 G-TT PRO	930 lm	3000 K	119 lm/W	92
911401522446	SM378B R P8 940 PSU-E WB D100 G-TT PRO	955 lm	4000 K	122 lm/W	92
911401522546	SM378B R P11 927 PSU-E NB D100 G-TT PRO	1,390 lm	2700 K	121 lm/W	92
911401522646	SM378B R P11 930 PSU-E NB D100 G-TT PRO	1,480 lm	3000 K	129 lm/W	92
911401522746	SM378B R P11 940 PSU-E NB D100 G-TT PRO	1,525 lm	4000 K	133 lm/W	92
911401522846	SM378B R P11 927 PSU-E MB D100 G-TT PRO	1,325 lm	2700 K	115 lm/W	92
911401522946	SM378B R P11 930 PSU-E MB D100 G-TT PRO	1,415 lm	3000 K	123 lm/W	92
911401523046	SM378B R P11 940 PSU-E MB D100 G-TT PRO	1,450 lm	4000 K	126 lm/W	92
911401523146	SM378B R P11 927 PSU-E WB D100 G-TT PRO	1,280 lm	2700 K	111 lm/W	92
911401523246	SM378B R P11 930 PSU-E WB D100 G-TT PRO	1,360 lm	3000 K	118 lm/W	92
911401523346	SM378B R P11 940 PSU-E WB D100 G-TT PRO	1,400 lm	4000 K	122 lm/W	92
911401523446	SM378B R P13 927 PSU-E NB D100 G-TT PRO	1,590 lm	2700 K	118 lm/W	92
911401523546	SM378B R P13 930 PSU-E NB D100 G-TT PRO	1,690 lm	3000 K	125 lm/W	92
911401523646	SM378B R P13 940 PSU-E NB D100 G-TT PRO	1,740 lm	4000 K	129 lm/W	92

Order Code	Full Product Name	Luminous Flux	Correlated Color Temperature (Nom)	Luminous Efficacy (rated) (Nom)	Color rendering index (CRI)
911401523746	SM378B R P13 927 PSU-E MB D100 G-TT PRO	1,510 lm	2700 K	112 lm/W	92
911401523846	SM378B R P13 930 PSU-E MB D100 G-TT PRO	1,615 lm	3000 K	120 lm/W	92
911401523946	SM378B R P13 940 PSU-E MB D100 G-TT PRO	1,655 lm	4000 K	123 lm/W	92
911401524046	SM378B R P13 927 PSU-E WB D100 G-TT PRO	1,470 lm	2700 K	109 lm/W	92
911401524146	SM378B R P13 930 PSU-E WB D100 G-TT PRO	1,565 lm	3000 K	116 lm/W	92
911401524246	SM378B R P13 940 PSU-E WB D100 G-TT PRO	1,615 lm	4000 K	120 lm/W	92
911401524346	SM378B R P20 927 PSU-E NB D100 G-TT PRO	2,115 lm	2700 K	106 lm/W	92
911401524446	SM378B R P20 930 PSU-E NB D100 G-TT PRO	2,250 lm	3000 K	113 lm/W	92
911401524546	SM378B R P20 940 PSU-E NB D100 G-TT PRO	2,315 lm	4000 K	116 lm/W	92
911401524646	SM378B R P20 927 PSU-E MB D100 G-TT PRO	2,015 lm	2700 K	101 lm/W	92
911401524746	SM378B R P20 930 PSU-E MB D100 G-TT PRO	2,150 lm	3000 K	108 lm/W	92
911401524846	SM378B R P20 940 PSU-E MB D100 G-TT PRO	2,205 lm	4000 K	110 lm/W	92
911401524946	SM378B R P20 927 PSU-E WB D100 G-TT PRO	1,955 lm	2700 K	98 lm/W	92
911401525046	SM378B R P20 930 PSU-E WB D100 G-TT PRO	2,080 lm	3000 K	104 lm/W	92
911401525146	SM378B R P20 940 PSU-E WB D100 G-TT PRO	2,150 lm	4000 K	108 lm/W	92
911401525246	SM378B R P20 927 PSD-E NB D100 G-TT PRO	2,115 lm	2700 K	103 lm/W	92
911401525346	SM378B R P20 930 PSD-E NB D100 G-TT PRO	2,250 lm	3000 K	110 lm/W	92
911401525446	SM378B R P20 940 PSD-E NB D100 G-TT PRO	2,315 lm	4000 K	113 lm/W	92
911401525546	SM378B R P20 927 PSD-E MB D100 G-TT PRO	2,015 lm	2700 K	98 lm/W	92
911401525646	SM378B R P20 930 PSD-E MB D100 G-TT PRO	2,150 lm	3000 K	105 lm/W	92
911401525746	SM378B R P20 940 PSD-E MB D100 G-TT PRO	2,205 lm	4000 K	108 lm/W	92
911401525846	SM378B R P20 927 PSD-E WB D100 G-TT PRO	1,955 lm	2700 K	95 lm/W	92
911401525946	SM378B R P20 930 PSD-E WB D100 G-TT PRO	2,080 lm	3000 K	101 lm/W	92
911401526046	SM378B R P20 940 PSD-E WB D100 G-TT PRO	2,150 lm	4000 K	105 lm/W	92
911401526146	SM378B R P8 927 PSD-E NB D100 G-TT PRO	955 lm	2700 K	106 lm/W	92
911401526246	SM378B R P8 930 PSD-E NB D100 G-TT PRO	1,015 lm	3000 K	113 lm/W	92
911401526346	SM378B R P8 940 PSD-E NB D100 G-TT PRO	1,045 lm	4000 K	116 lm/W	92
911401526446	SM378B R P8 927 PSD-E MB D100 G-TT PRO	900 lm	2700 K	100 lm/W	92
911401526546	SM378B R P8 930 PSD-E MB D100 G-TT PRO	965 lm	3000 K	107 lm/W	92
911401526646	SM378B R P8 940 PSD-E MB D100 G-TT PRO	990 lm	4000 K	110 lm/W	92
911401526746	SM378B R P8 927 PSD-E WB D100 G-TT PRO	875 lm	2700 K	97 lm/W	92
911401526846	SM378B R P8 930 PSD-E WB D100 G-TT PRO	930 lm	3000 K	103 lm/W	92
911401526946	SM378B R P8 940 PSD-E WB D100 G-TT PRO	955 lm	4000 K	106 lm/W	92
911401527046	SM378B R P12 927 PSD-E NB D100 G-TT PRO	1,390 lm	2700 K	107 lm/W	92
911401527146	SM378B R P12 930 PSD-E NB D100 G-TT PRO	1,480 lm	3000 K	114 lm/W	92
911401527246	SM378B R P12 940 PSD-E NB D100 G-TT PRO	1,525 lm	4000 K	117 lm/W	92
911401527346	SM378B R P12 927 PSD-E MB D100 G-TT PRO	1,325 lm	2700 K	102 lm/W	92
911401527446	SM378B R P12 930 PSD-E MB D100 G-TT PRO	1,415 lm	3000 K	109 lm/W	92
911401527546	SM378B R P12 940 PSD-E MB D100 G-TT PRO	1,450 lm	4000 K	112 lm/W	92
911401527646	SM378B R P12 927 PSD-E WB D100 G-TT PRO	1,280 lm	2700 K	98 lm/W	92
911401527746	SM378B R P12 930 PSD-E WB D100 G-TT PRO	1,360 lm	3000 K	105 lm/W	92
911401527846	SM378B R P12 940 PSD-E WB D100 G-TT PRO	1,400 lm	4000 K	108 lm/W	92

Order Code	Full Product Name	Luminous Flux	Correlated Color Temperature (Nom)	Luminous Efficacy (rated) (Nom)	Color rendering index (CRI)
911401527946	SM378B R P14 927 PSD-E NB D100 G-TT PRO	1,590 lm	2700 K	110 lm/W	92
911401528046	SM378B R P14 930 PSD-E NB D100 G-TT PRO	1,690 lm	3000 K	117 lm/W	92
911401528146	SM378B R P14 940 PSD-E NB D100 G-TT PRO	1,740 lm	4000 K	120 lm/W	92
911401528246	SM378B R P14 927 PSD-E MB D100 G-TT PRO	1,510 lm	2700 K	104 lm/W	92
911401528346	SM378B R P14 930 PSD-E MB D100 G-TT PRO	1,615 lm	3000 K	111 lm/W	92
911401528446	SM378B R P14 940 PSD-E MB D100 G-TT PRO	1,655 lm	4000 K	114 lm/W	92
911401528546	SM378B R P14 927 PSD-E WB D100 G-TT PRO	1,470 lm	2700 K	101 lm/W	92
911401528646	SM378B R P14 930 PSD-E WB D100 G-TT PRO	1,565 lm	3000 K	108 lm/W	92
911401528746	SM378B R P14 940 PSD-E WB D100 G-TT PRO	1,615 lm	4000 K	111 lm/W	92
911401528846	SM378X R P8 930 WIA MB D100 G-TT PRO	965 lm	3000 K	118 lm/W	92
911401528946	SM378X R P8 930 WIA WB D100 G-TT PRO	930 lm	3000 K	113 lm/W	92
911401529046	SM378X R P12 930 WIA MB D100 G-TT PRO	1,415 lm	3000 K	118 lm/W	92
911401529146	SM378X R P12 930 WIA WB D100 G-TT PRO	1,360 lm	3000 K	113 lm/W	92
911401529246	SM378X R P14 930 WIA MB D100 G-TT PRO	1,615 lm	3000 K	115 lm/W	92
911401529346	SM378X R P14 930 WIA WB D100 G-TT PRO	1,565 lm	3000 K	112 lm/W	92
911401529446	SM378X R P20 930 WIA MB D100 G-TT PRO	2,150 lm	3000 K	108 lm/W	92
911401529546	SM378X R P20 930 WIA WB D100 G-TT PRO	2,080 lm	3000 K	104 lm/W	92
911401529646	SM378B R P9 PSD-TNW NB D100 G-TT PRO	770 lm	Tunable White	86 lm/W	90
911401529746	SM378B R P9 PSD-TNW MB D100 G-TT PRO	770 lm	Tunable White	86 lm/W	90
911401529846	SM378B R P9 PSD-TNW WB D100 G-TT PRO	750 lm	Tunable White	83 lm/W	90
911401529946	SM378B R P12 PSD-TNW NB D100 G-TT PRO	1,110 lm	Tunable White	85 lm/W	90
911401530046	SM378B R P12 PSD-TNW MB D100 G-TT PRO	1,090 lm	Tunable White	84 lm/W	90
911401530146	SM378B R P12 PSD-TNW WB D100 G-TT PRO	1,070 lm	Tunable White	82 lm/W	90
911401530246	SM378B R P15 PSD-TNW NB D100 G-TT PRO	1,320 lm	Tunable White	85 lm/W	90
911401530346	SM378B R P15 PSD-TNW MB D100 G-TT PRO	1,300 lm	Tunable White	84 lm/W	90
911401530446	SM378B R P15 PSD-TNW WB D100 G-TT PRO	1,270 lm	Tunable White	82 lm/W	90
911401530546	SM378B R P22 PSD-TNW NB D100 G-TT PRO	1,800 lm	Tunable White	82 lm/W	90
911401530646	SM378B R P22 PSD-TNW MB D100 G-TT PRO	1,780 lm	Tunable White	81 lm/W	90
911401530746	SM378B R P22 PSD-TNW WB D100 G-TT PRO	1,740 lm	Tunable White	79 lm/W	90
911401581747	RS378B P9 930 PSD VWB D75 G-TT PROCAU	895 lm	3000 K	94 lm/W	92
911401581847	RS378B P9 930 PSD VWB WP D75 G-TT PROCAU	895 lm	3000 K	94 lm/W	92
911401582147	RS378B P9 930 PSD MB D75 G-TT PROCAU	920 lm	3000 K	97 lm/W	92
911401582247	RS378B P9 930 PSD MB WP D75 G-TT PROCAU	920 lm	3000 K	97 lm/W	92
911401500046	RS378B P7 930 PSD-E WB M43 PRO	600 lm	3000 K	81 lm/W	92
911401500146	RS378B P7 940 PSD-E WB M43 PRO	660 lm	4000 K	89 lm/W	92
911401500246	RS378B P6 930 PSU-E MB M43 WP PRO	540 lm	3000 K	92 lm/W	92
911401500346	RS378B P6 930 PSU-E WB M43 WP PRO	545 lm	3000 K	92 lm/W	92
911401500446	RS378B P8 930 PSU-E MB M43 WP PRO	685 lm	3000 K	86 lm/W	92
911401500546	RS378B P8 930 PSU-E WB M43 WP PRO	705 lm	3000 K	88 lm/W	92
911401520146	RS378B P7 PSD-TNW NB M43 PRO	530 lm	Tunable White	71 lm/W	90
911401520246	RS378B P7 PSD-TNW MB M43 PRO	530 lm	Tunable White	71 lm/W	90
911401520346	RS378B P7 PSD-TNW WB M43 PRO	580 lm	Tunable White	77 lm/W	90

Order Code	Full Product Name	Luminous Flux	Correlated Color Temperature (Nom)	Luminous Efficacy (rated) (Nom)	Color rendering index (CRI)
911401596945	RS378B P6 927 PSU-E SNB M43 PRO	475 lm	2700 K	73 lm/W	92
911401597045	RS378B P6 930 PSU-E SNB M43 PRO	510 lm	3000 K	78 lm/W	92
911401597145	RS378B P6 940 PSU-E SNB M43 PRO	540 lm	4000 K	83 lm/W	92
911401597245	RS378B P6 927 PSU-E NB M43 PRO	500 lm	2700 K	85 lm/W	92
911401597345	RS378B P6 930 PSU-E NB M43 PRO	530 lm	3000 K	90 lm/W	92
911401597445	RS378B P6 940 PSU-E NB M43 PRO	550 lm	4000 K	93 lm/W	92
911401597545	RS378B P6 927 PSU-E MB M43 PRO	510 lm	2700 K	86 lm/W	92
911401597645	RS378B P6 930 PSU-E MB M43 PRO	540 lm	3000 K	92 lm/W	92
911401597745	RS378B P6 940 PSU-E MB M43 PRO	585 lm	4000 K	99 lm/W	92
911401597845	RS378B P6 927 PSU-E WB M43 PRO	525 lm	2700 K	89 lm/W	92
911401597945	RS378B P6 930 PSU-E WB M43 PRO	545 lm	3000 K	92 lm/W	92
911401598045	RS378B P6 940 PSU-E WB M43 PRO	600 lm	4000 K	102 lm/W	92
911401598145	RS378B P8 927 PSU-E NB M43 PRO	625 lm	2700 K	78 lm/W	92
911401598245	RS378B P8 930 PSU-E NB M43 PRO	665 lm	3000 K	83 lm/W	92
911401598345	RS378B P8 940 PSU-E NB M43 PRO	705 lm	4000 K	88 lm/W	92
911401598445	RS378B P8 927 PSU-E MB M43 PRO	645 lm	2700 K	81 lm/W	92
911401598545	RS378B P8 930 PSU-E MB M43 PRO	685 lm	3000 K	86 lm/W	92
911401598645	RS378B P8 940 PSU-E MB M43 PRO	725 lm	4000 K	91 lm/W	92
911401598745	RS378B P8 927 PSU-E WB M43 PRO	665 lm	2700 K	83 lm/W	92
911401598845	RS378B P8 930 PSU-E WB M43 PRO	705 lm	3000 K	88 lm/W	92
911401598945	RS378B P8 940 PSU-E WB M43 PRO	750 lm	4000 K	94 lm/W	92
911401599045	RS378B P7 927 PSD-E SNB M43 PRO	525 lm	2700 K	70 lm/W	92
911401599145	RS378B P7 930 PSD-E SNB M43 PRO	555 lm	3000 K	74 lm/W	92
911401599245	RS378B P7 940 PSD-E SNB M43 PRO	595 lm	4000 K	79 lm/W	92
911401599345	RS378B P7 927 PSD-E NB M43 PRO	550 lm	2700 K	74 lm/W	92
911401599445	RS378B P7 930 PSD-E NB M43 PRO	585 lm	3000 K	79 lm/W	92
911401599545	RS378B P7 940 PSD-E NB M43 PRO	605 lm	4000 K	82 lm/W	92
911401599645	RS378B P7 927 PSD-E MB M43 PRO	560 lm	2700 K	76 lm/W	92
911401599745	RS378B P7 930 PSD-E MB M43 PRO	595 lm	3000 K	80 lm/W	92
911401599845	RS378B P7 940 PSD-E MB M43 PRO	645 lm	4000 K	87 lm/W	92
911401599945	RS378B P7 927 PSD-E WB M43 PRO	575 lm	2700 K	78 lm/W	92
911401582747	RS378B P12 930 PSD VWB WP D100M-WHPROCAU	1,510 lm	3000 K	118 lm/W	92
911401582847	RS378B P12 930 PSD VWB D100 M-WH PROCAU	1,510 lm	3000 K	118 lm/W	92
911401583147	RS378B P12 930 PSD MB WP D100M-WHPROCAU	1,510 lm	3000 K	118 lm/W	92
911401583247	RS378B P12 930 PSD MB D100 M-WH PROCAU	1,510 lm	3000 K	118 lm/W	92
911401500646	RS378B P7 927 PSU-E SNB M55 PRO	620 lm	2700 K	86 lm/W	92
911401500746	RS378B P7 930 PSU-E SNB M55 PRO	660 lm	3000 K	92 lm/W	92
911401500846	RS378B P7 940 PSU-E SNB M55 PRO	700 lm	4000 K	97 lm/W	92
911401500946	RS378B P7 927 PSU-E NB M55 PRO	745 lm	2700 K	105 lm/W	92
911401501046	RS378B P7 930 PSU-E NB M55 PRO	795 lm	3000 K	112 lm/W	92

Order Code	Full Product Name	Luminous Flux	Correlated Color Temperature (Nom)	Luminous Efficacy (rated) (Nom)	Color rendering index (CRI)
911401501146	RS378B P7 940 PSU-E NB M55 PRO	820 lm	4000 K	115 lm/W	92
911401501246	RS378B P7 927 PSU-E MB M55 PRO	765 lm	2700 K	108 lm/W	92
911401501346	RS378B P7 930 PSU-E MB M55 PRO	810 lm	3000 K	114 lm/W	92
911401501446	RS378B P7 940 PSU-E MB M55 PRO	835 lm	4000 K	118 lm/W	92
911401501546	RS378B P7 927 PSU-E WB M55 PRO	785 lm	2700 K	111 lm/W	92
911401501646	RS378B P7 930 PSU-E WB M55 PRO	825 lm	3000 K	116 lm/W	92
911401501746	RS378B P7 940 PSU-E WB M55 PRO	860 lm	4000 K	121 lm/W	92
911401501846	RS378B P8 927 PSU-E SNB M55 PRO	665 lm	2700 K	83 lm/W	92
911401501946	RS378B P8 930 PSU-E SNB M55 PRO	705 lm	3000 K	88 lm/W	92
911401502046	RS378B P8 940 PSU-E SNB M55 PRO	745 lm	4000 K	93 lm/W	92
911401502146	RS378B P9 927 PSU-E NB M55 PRO	890 lm	2700 K	99 lm/W	92
911401502246	RS378B P9 930 PSU-E NB M55 PRO	950 lm	3000 K	106 lm/W	92
911401502346	RS378B P9 940 PSU-E NB M55 PRO	980 lm	4000 K	109 lm/W	92
911401502446	RS378B P9 927 PSU-E MB M55 PRO	920 lm	2700 K	102 lm/W	92
911401502546	RS378B P9 930 PSU-E MB M55 PRO	980 lm	3000 K	109 lm/W	92
911401502646	RS378B P9 940 PSU-E MB M55 PRO	1,000 lm	4000 K	111 lm/W	92
911401502746	RS378B P9 927 PSU-E WB M55 PRO	950 lm	2700 K	106 lm/W	92
911401502846	RS378B P9 930 PSU-E WB M55 PRO	1,000 lm	3000 K	111 lm/W	92
911401502946	RS378B P9 940 PSU-E WB M55 PRO	1,030 lm	4000 K	114 lm/W	92
911401504846	RS378B P7 927 PSD-E SNB M55 PRO	580 lm	2700 K	77 lm/W	92
911401504946	RS378B P7 930 PSD-E SNB M55 PRO	630 lm	3000 K	84 lm/W	92
911401505046	RS378B P7 940 PSD-E SNB M55 PRO	655 lm	4000 K	87 lm/W	92
911401505146	RS378B P7 927 PSD-E NB M55 PRO	700 lm	2700 K	96 lm/W	92
911401505246	RS378B P7 930 PSD-E NB M55 PRO	745 lm	3000 K	102 lm/W	92
911401505346	RS378B P7 940 PSD-E NB M55 PRO	770 lm	4000 K	105 lm/W	92
911401505446	RS378B P7 927 PSD-E MB M55 PRO	715 lm	2700 K	98 lm/W	92
911401505546	RS378B P7 930 PSD-E MB M55 PRO	760 lm	3000 K	104 lm/W	92
911401505646	RS378B P7 940 PSD-E MB M55 PRO	780 lm	4000 K	107 lm/W	92
911401505746	RS378B P7 927 PSD-E WB M55 PRO	735 lm	2700 K	101 lm/W	92
911401505846	RS378B P7 930 PSD-E WB M55 PRO	770 lm	3000 K	105 lm/W	92
911401505946	RS378B P7 940 PSD-E WB M55 PRO	805 lm	4000 K	110 lm/W	92
911401506046	RS378B P9 927 PSD-E NB M55 PRO	890 lm	2700 K	94 lm/W	92
911401506146	RS378B P9 930 PSD-E NB M55 PRO	950 lm	3000 K	100 lm/W	92
911401506246	RS378B P9 940 PSD-E NB M55 PRO	980 lm	4000 K	103 lm/W	92
911401506346	RS378B P9 927 PSD-E MB M55 PRO	920 lm	2700 K	97 lm/W	92
911401506446	RS378B P9 930 PSD-E MB M55 PRO	980 lm	3000 K	103 lm/W	92
911401506546	RS378B P9 940 PSD-E MB M55 PRO	1,000 lm	4000 K	105 lm/W	92
911401506646	RS378B P9 927 PSD-E WB M55 PRO	950 lm	2700 K	100 lm/W	92
911401506746	RS378B P9 930 PSD-E WB M55 PRO	1,000 lm	3000 K	105 lm/W	92
911401506846	RS378B P9 940 PSD-E WB M55 PRO	1,030 lm	4000 K	108 lm/W	92
911401508746	RS378X P9 930 WIA MB M55 PRO	980 lm	3000 K	113 lm/W	92
911401508846	RS378X P9 930 WIA WB M55 PRO	1,000 lm	3000 K	115 lm/W	92

Order Code	Full Product Name	Luminous Flux	Correlated Color Temperature (Nom)	Luminous Efficacy (rated) (Nom)	Color rendering index (CRI)
911401509346	RS378B P7 930 PSU-E MB M55 WP PRO	810 lm	3000 K	114 lm/W	92
911401509446	RS378B P7 930 PSU-E WB M55 WP PRO	825 lm	3000 K	116 lm/W	92
911401509546	RS378B P9 930 PSU-E MB M55 WP PRO	980 lm	3000 K	109 lm/W	92
911401509646	RS378B P9 930 PSU-E WB M55 WP PRO	1,000 lm	3000 K	111 lm/W	92
911401518946	RS378B P7 PSD-TNW NB M55 PRO	520 lm	Tunable White	73 lm/W	90
911401519046	RS378B P7 PSD-TNW MB M55 PRO	530 lm	Tunable White	75 lm/W	90
911401519146	RS378B P7 PSD-TNW WB M55 PRO	550 lm	Tunable White	77 lm/W	90
911401519246	RS378B P9 PSD-TNW NB M55 PRO	650 lm	Tunable White	72 lm/W	90
911401519346	RS378B P9 PSD-TNW MB M55 PRO	670 lm	Tunable White	74 lm/W	90
911401519446	RS378B P9 PSD-TNW WB M55 PRO	690 lm	Tunable White	77 lm/W	90
911401595145	RS378B P3 927 PSU-E MB D35 G-TT PRO	230 lm	2700 K	74 lm/W	92
911401595245	RS378B P3 930 PSU-E MB D35 G-TT PRO	245 lm	3000 K	79 lm/W	92
911401595345	RS378B P3 940 PSU-E MB D35 G-TT PRO	260 lm	4000 K	84 lm/W	92
911401595445	RS378B P3 927 PSU-E WB D35 G-TT PRO	220 lm	2700 K	71 lm/W	92
911401595545	RS378B P3 930 PSU-E WB D35 G-TT PRO	245 lm	3000 K	79 lm/W	92
911401595645	RS378B P3 940 PSU-E WB D35 G-TT PRO	250 lm	4000 K	81 lm/W	92
911401595745	RS378B P5 927 PSU-E MB D35 G-TT PRO	345 lm	2700 K	73 lm/W	92
911401595845	RS378B P5 930 PSU-E MB D35 G-TT PRO	370 lm	3000 K	79 lm/W	92
911401595945	RS378B P5 940 PSU-E MB D35 G-TT PRO	390 lm	4000 K	83 lm/W	92
911401596045	RS378B P5 927 PSU-E WB D35 G-TT PRO	340 lm	2700 K	72 lm/W	92
911401596145	RS378B P5 930 PSU-E WB D35 G-TT PRO	365 lm	3000 K	78 lm/W	92
911401596245	RS378B P5 940 PSU-E WB D35 G-TT PRO	390 lm	4000 K	83 lm/W	92
911401596345	RS378B P5 927 PSD-E MB D35 G-TT PRO	315 lm	2700 K	59 lm/W	92
911401596445	RS378B P5 930 PSD-E MB D35 G-TT PRO	335 lm	3000 K	63 lm/W	92
911401596545	RS378B P5 940 PSD-E MB D35 G-TT PRO	355 lm	4000 K	67 lm/W	92
911401596645	RS378B P5 927 PSD-E WB D35 G-TT PRO	310 lm	2700 K	58 lm/W	92
911401596745	RS378B P5 930 PSD-E WB D35 G-TT PRO	330 lm	3000 K	62 lm/W	92
911401596845	RS378B P5 940 PSD-E WB D35 G-TT PRO	355 lm	4000 K	67 lm/W	92
911401510146	RS378B P12 927 PSU-E NB M70 PRO	1,475 lm	2700 K	123 lm/W	92
911401510246	RS378B P12 930 PSU-E NB M70 PRO	1,585 lm	3000 K	132 lm/W	92
911401510346	RS378B P12 940 PSU-E NB M70 PRO	1,575 lm	4000 K	131 lm/W	92
911401510446	RS378B P12 927 PSU-E MB M70 PRO	1,455 lm	2700 K	121 lm/W	92
911401510546	RS378B P12 930 PSU-E MB M70 PRO	1,625 lm	3000 K	135 lm/W	92
911401510646	RS378B P12 940 PSU-E MB M70 PRO	1,650 lm	4000 K	138 lm/W	92
911401510746	RS378B P12 927 PSU-E WB M70 PRO	1,560 lm	2700 K	130 lm/W	92
911401510846	RS378B P12 930 PSU-E WB M70 PRO	1,655 lm	3000 K	138 lm/W	92
911401510946	RS378B P12 940 PSU-E WB M70 PRO	1,710 lm	4000 K	143 lm/W	92
911401511046	RS378B P17 927 PSU-E NB M70 PRO	2,095 lm	2700 K	120 lm/W	92
911401511146	RS378B P17 930 PSU-E NB M70 PRO	2,245 lm	3000 K	128 lm/W	92
911401511246	RS378B P17 940 PSU-E NB M70 PRO	2,330 lm	4000 K	133 lm/W	92
911401511346	RS378B P17 927 PSU-E MB M70 PRO	2,065 lm	2700 K	118 lm/W	92
911401511446	RS378B P17 930 PSU-E MB M70 PRO	2,295 lm	3000 K	131 lm/W	92

Order Code	Full Product Name	Luminous Flux	Correlated Color Temperature (Nom)	Luminous Efficacy (rated) (Nom)	Color rendering index (CRI)
911401511546	RS378B P17 940 PSU-E MB M70 PRO	2,365 lm	4000 K	135 lm/W	92
911401511646	RS378B P17 927 PSU-E WB M70 PRO	2,240 lm	2700 K	128 lm/W	92
911401511746	RS378B P17 930 PSU-E WB M70 PRO	2,385 lm	3000 K	136 lm/W	92
911401511846	RS378B P17 940 PSU-E WB M70 PRO	2,390 lm	4000 K	137 lm/W	92
911401511946	RS378B P19 927 PSU-E NB M70 PRO	2,270 lm	2700 K	116 lm/W	92
911401512046	RS378B P19 930 PSU-E NB M70 PRO	2,390 lm	3000 K	123 lm/W	92
911401512146	RS378B P19 940 PSU-E NB M70 PRO	2,510 lm	4000 K	129 lm/W	92
911401512246	RS378B P19 927 PSU-E MB M70 PRO	2,265 lm	2700 K	116 lm/W	92
911401512346	RS378B P19 930 PSU-E MB M70 PRO	2,505 lm	3000 K	128 lm/W	92
911401512446	RS378B P19 940 PSU-E MB M70 PRO	2,585 lm	4000 K	133 lm/W	92
911401512546	RS378B P19 927 PSU-E WB M70 PRO	2,435 lm	2700 K	125 lm/W	92
911401512646	RS378B P19 930 PSU-E WB M70 PRO	2,585 lm	3000 K	133 lm/W	92
911401512746	RS378B P19 940 PSU-E WB M70 PRO	2,605 lm	4000 K	134 lm/W	92
911401513746	RS378B P12 927 PSD-E NB M70 PRO	1,475 lm	2700 K	115 lm/W	92
911401513846	RS378B P12 930 PSD-E NB M70 PRO	1,585 lm	3000 K	124 lm/W	92
911401513946	RS378B P12 940 PSD-E NB M70 PRO	1,575 lm	4000 K	123 lm/W	92
911401514046	RS378B P12 927 PSD-E MB M70 PRO	1,455 lm	2700 K	114 lm/W	92
911401514146	RS378B P12 930 PSD-E MB M70 PRO	1,625 lm	3000 K	127 lm/W	92
911401514246	RS378B P12 940 PSD-E MB M70 PRO	1,650 lm	4000 K	129 lm/W	92
911401514346	RS378B P12 927 PSD-E WB M70 PRO	1,560 lm	2700 K	122 lm/W	92
911401514446	RS378B P12 930 PSD-E WB M70 PRO	1,655 lm	3000 K	129 lm/W	92
911401514546	RS378B P12 940 PSD-E WB M70 PRO	1,710 lm	4000 K	134 lm/W	92
911401514646	RS378B P18 927 PSD-E NB M70 PRO	2,095 lm	2700 K	113 lm/W	92
911401514746	RS378B P18 930 PSD-E NB M70 PRO	2,245 lm	3000 K	121 lm/W	92
911401514846	RS378B P18 940 PSD-E NB M70 PRO	2,330 lm	4000 K	126 lm/W	92
911401514946	RS378B P18 927 PSD-E MB M70 PRO	2,065 lm	2700 K	112 lm/W	92
911401515046	RS378B P18 930 PSD-E MB M70 PRO	2,295 lm	3000 K	124 lm/W	92
911401515146	RS378B P18 940 PSD-E MB M70 PRO	2,365 lm	4000 K	128 lm/W	92
911401515246	RS378B P18 927 PSD-E WB M70 PRO	2,240 lm	2700 K	121 lm/W	92
911401515346	RS378B P18 930 PSD-E WB M70 PRO	2,385 lm	3000 K	129 lm/W	92
911401515446	RS378B P18 940 PSD-E WB M70 PRO	2,390 lm	4000 K	129 lm/W	92
911401515546	RS378B P20 927 PSD-E NB M70 PRO	2,270 lm	2700 K	111 lm/W	92
911401515646	RS378B P20 930 PSD-E NB M70 PRO	2,390 lm	3000 K	117 lm/W	92
911401515746	RS378B P20 940 PSD-E NB M70 PRO	2,510 lm	4000 K	122 lm/W	92
911401515846	RS378B P20 927 PSD-E MB M70 PRO	2,265 lm	2700 K	110 lm/W	92
911401515946	RS378B P20 930 PSD-E MB M70 PRO	2,505 lm	3000 K	122 lm/W	92
911401516046	RS378B P20 940 PSD-E MB M70 PRO	2,585 lm	4000 K	126 lm/W	92
911401516146	RS378B P20 927 PSD-E WB M70 PRO	2,435 lm	2700 K	119 lm/W	92
911401516246	RS378B P20 930 PSD-E WB M70 PRO	2,585 lm	3000 K	126 lm/W	92
911401516346	RS378B P20 940 PSD-E WB M70 PRO	2,605 lm	4000 K	127 lm/W	92
911401517346	RS378X P12 930 WIA MB M70 PRO	1,625 lm	3000 K	135 lm/W	92
911401517446	RS378X P12 930 WIA WB M70 PRO	1,655 lm	3000 K	138 lm/W	92

Order Code	Full Product Name	Luminous Flux	Correlated Color Temperature (Nom)	Luminous Efficacy (rated) (Nom)	Color rendering index (CRI)
911401517546	RS378X P19 930 WIA MB M70 PRO	2,505 lm	3000 K	125 lm/W	92
911401517646	RS378X P19 930 WIA WB M70 PRO	2,585 lm	3000 K	129 lm/W	92
911401517746	RS378X P18 930 WIA MB M70 PRO	2,295 lm	3000 K	128 lm/W	92
911401517846	RS378X P18 930 WIA WB M70 PRO	2,385 lm	3000 K	133 lm/W	92
911401518146	RS378B P12 930 PSU-E MB M70 WP PRO	1,625 lm	3000 K	135 lm/W	92
911401518246	RS378B P12 930 PSU-E WB M70 WP PRO	1,655 lm	3000 K	138 lm/W	92
911401518346	RS378B P17 930 PSU-E MB M70 WP PRO	2,295 lm	3000 K	131 lm/W	92
911401518446	RS378B P17 930 PSU-E WB M70 WP PRO	2,385 lm	3000 K	136 lm/W	92
911401518546	RS378B P19 930 PSU-E MB M70 WP PRO	2,505 lm	3000 K	128 lm/W	92
911401518646	RS378B P19 930 PSU-E WB M70 WP PRO	2,585 lm	3000 K	133 lm/W	92
911401520446	RS378B P13 PSD-TNW NB M70 PRO	1,120 lm	Tunable White	83 lm/W	90
911401520546	RS378B P13 PSD-TNW MB M70 PRO	1,110 lm	Tunable White	82 lm/W	90
911401520646	RS378B P13 PSD-TNW WB M70 PRO	1,110 lm	Tunable White	82 lm/W	90
911401520746	RS378B P19 PSD-TNW NB M70 PRO	1,620 lm	Tunable White	81 lm/W	90
911401520846	RS378B P19 PSD-TNW MB M70 PRO	1,600 lm	Tunable White	80 lm/W	90
911401520946	RS378B P19 PSD-TNW WB M70 PRO	1,600 lm	Tunable White	80 lm/W	90
911401521046	RS378B P22 PSD-TNW NB M70 PRO	1,780 lm	Tunable White	81 lm/W	90
911401521146	RS378B P22 PSD-TNW MB M70 PRO	1,760 lm	Tunable White	80 lm/W	90
911401521246	RS378B P22 PSD-TNW WB M70 PRO	1,760 lm	Tunable White	80 lm/W	90
911401512846	RS378B P27 927 PSU-E NB M70 PRO	2,905 lm	2700 K	106 lm/W	92
911401512946	RS378B P27 930 PSU-E NB M70 PRO	3,090 lm	3000 K	112 lm/W	92
911401513046	RS378B P27 940 PSU-E NB M70 PRO	3,185 lm	4000 K	116 lm/W	92
911401513146	RS378B P27 927 PSU-E MB M70 PRO	2,995 lm	2700 K	109 lm/W	92
911401513246	RS378B P27 930 PSU-E MB M70 PRO	3,185 lm	3000 K	116 lm/W	92
911401513346	RS378B P27 940 PSU-E MB M70 PRO	3,280 lm	4000 K	119 lm/W	92
911401513446	RS378B P27 927 PSU-E WB M70 PRO	3,090 lm	2700 K	112 lm/W	92
911401513546	RS378B P27 930 PSU-E WB M70 PRO	3,285 lm	3000 K	119 lm/W	92
911401513646	RS378B P27 940 PSU-E WB M70 PRO	3,385 lm	4000 K	123 lm/W	92
911401516446	RS378B P27 927 PSD-E NB M70 PRO	2,750 lm	2700 K	102 lm/W	92
911401516546	RS378B P27 930 PSD-E NB M70 PRO	2,925 lm	3000 K	108 lm/W	92
911401516646	RS378B P27 940 PSD-E NB M70 PRO	3,015 lm	4000 K	112 lm/W	92
911401516746	RS378B P27 927 PSD-E MB M70 PRO	2,835 lm	2700 K	105 lm/W	92
911401516846	RS378B P27 930 PSD-E MB M70 PRO	3,015 lm	3000 K	112 lm/W	92
911401516946	RS378B P27 940 PSD-E MB M70 PRO	3,105 lm	4000 K	115 lm/W	92
911401517046	RS378B P27 927 PSD-E WB M70 PRO	2,925 lm	2700 K	108 lm/W	92
911401517146	RS378B P27 930 PSD-E WB M70 PRO	3,110 lm	3000 K	115 lm/W	92
911401517246	RS378B P27 940 PSD-E WB M70 PRO	3,205 lm	4000 K	119 lm/W	92
911401517946	RS378X P28 930 WIA MB M70 PRO	3,185 lm	3000 K	112 lm/W	92
911401518046	RS378X P28 930 WIA WB M70 PRO	3,285 lm	3000 K	115 lm/W	92
911401518746	RS378B P27 930 PSU-E MB M70 WP PRO	3,185 lm	3000 K	116 lm/W	92
911401518846	RS378B P27 930 PSU-E WB M70 WP PRO	3,285 lm	3000 K	119 lm/W	92
911401521346	RS378B P29 PSD-TNW NB M70 PRO	2,240 lm	Tunable White	80 lm/W	90

Order Code	Full Product Name	Luminous Flux	Correlated Color Temperature (Nom)	Luminous Efficacy (rated) (Nom)	Color rendering index (CRI)
911401521446	RS378B P29 PSD-TNW MB M70 PRO	2,210 lm	Tunable White	79 lm/W	90
911401521546	RS378B P29 PSD-TNW WB M70 PRO	2,210 lm	Tunable White	79 lm/W	90
911401580947	RS378B P7 930 PSD VWB D55 G-TT PROCAU	570 lm	3000 K	77 lm/W	92
911401581047	RS378B P7 930 PSD VWB WP D55 G-TT PROCAU	570 lm	3000 K	77 lm/W	92
911401581347	RS378B P7 930 PSD MB D55 G-TT PROCAU	545 lm	3000 K	74 lm/W	92
911401581447	RS378B P7 930 PSD MB WP D55 G-TT PROCAU	545 lm	3000 K	74 lm/W	92
911401530846	SM378B S P8 927 PSU-E NB D100 G-TT PRO	955 lm	2700 K	122 lm/W	92
911401530946	SM378B S P8 930 PSU-E NB D100 G-TT PRO	1,015 lm	3000 K	130 lm/W	92
911401531046	SM378B S P8 940 PSU-E NB D100 G-TT PRO	1,045 lm	4000 K	134 lm/W	92
911401531146	SM378B S P8 927 PSU-E MB D100 G-TT PRO	900 lm	2700 K	115 lm/W	92
911401531246	SM378B S P8 930 PSU-E MB D100 G-TT PRO	965 lm	3000 K	124 lm/W	92
911401531346	SM378B S P8 940 PSU-E MB D100 G-TT PRO	990 lm	4000 K	127 lm/W	92
911401531446	SM378B S P8 927 PSU-E WB D100 G-TT PRO	875 lm	2700 K	112 lm/W	92
911401531546	SM378B S P8 930 PSU-E WB D100 G-TT PRO	930 lm	3000 K	119 lm/W	92
911401531646	SM378B S P8 940 PSU-E WB D100 G-TT PRO	955 lm	4000 K	122 lm/W	92
911401531746	SM378B S P11 927 PSU-E NB D100 G-TT PRO	1,390 lm	2700 K	121 lm/W	92
911401531846	SM378B S P11 930 PSU-E NB D100 G-TT PRO	1,480 lm	3000 K	129 lm/W	92
911401531946	SM378B S P11 940 PSU-E NB D100 G-TT PRO	1,525 lm	4000 K	133 lm/W	92
911401532046	SM378B S P11 927 PSU-E MB D100 G-TT PRO	1,325 lm	2700 K	115 lm/W	92
911401532146	SM378B S P11 930 PSU-E MB D100 G-TT PRO	1,415 lm	3000 K	123 lm/W	92
911401532246	SM378B S P11 940 PSU-E MB D100 G-TT PRO	1,450 lm	4000 K	126 lm/W	92
911401532346	SM378B S P11 927 PSU-E WB D100 G-TT PRO	1,280 lm	2700 K	111 lm/W	92
911401532446	SM378B S P11 930 PSU-E WB D100 G-TT PRO	1,360 lm	3000 K	118 lm/W	92
911401532546	SM378B S P11 940 PSU-E WB D100 G-TT PRO	1,400 lm	4000 K	122 lm/W	92
911401532646	SM378B S P13 927 PSU-E NB D100 G-TT PRO	1,590 lm	2700 K	118 lm/W	92
911401532746	SM378B S P13 930 PSU-E NB D100 G-TT PRO	1,690 lm	3000 K	125 lm/W	92
911401532846	SM378B S P13 940 PSU-E NB D100 G-TT PRO	1,740 lm	4000 K	129 lm/W	92
911401532946	SM378B S P13 927 PSU-E MB D100 G-TT PRO	1,510 lm	2700 K	112 lm/W	92
911401533046	SM378B S P13 930 PSU-E MB D100 G-TT PRO	1,615 lm	3000 K	120 lm/W	92
911401533146	SM378B S P13 940 PSU-E MB D100 G-TT PRO	1,655 lm	4000 K	123 lm/W	92
911401533246	SM378B S P13 927 PSU-E WB D100 G-TT PRO	1,470 lm	2700 K	109 lm/W	92
911401533346	SM378B S P13 930 PSU-E WB D100 G-TT PRO	1,565 lm	3000 K	116 lm/W	92
911401533446	SM378B S P13 940 PSU-E WB D100 G-TT PRO	1,615 lm	4000 K	120 lm/W	92
911401533546	SM378B S P20 927 PSU-E NB D100 G-TT PRO	2,115 lm	2700 K	106 lm/W	92
911401533646	SM378B S P20 930 PSU-E NB D100 G-TT PRO	2,250 lm	3000 K	113 lm/W	92
911401533746	SM378B S P20 940 PSU-E NB D100 G-TT PRO	2,315 lm	4000 K	116 lm/W	92
911401533846	SM378B S P20 927 PSU-E MB D100 G-TT PRO	2,015 lm	2700 K	101 lm/W	92
911401533946	SM378B S P20 930 PSU-E MB D100 G-TT PRO	2,150 lm	3000 K	108 lm/W	92
911401534046	SM378B S P20 940 PSU-E MB D100 G-TT PRO	2,205 lm	4000 K	110 lm/W	92
911401534146	SM378B S P20 927 PSU-E WB D100 G-TT PRO	1,955 lm	2700 K	98 lm/W	92
911401534246	SM378B S P20 930 PSU-E WB D100 G-TT PRO	2,080 lm	3000 K	104 lm/W	92
911401534346	SM378B S P20 940 PSU-E WB D100 G-TT PRO	2,150 lm	4000 K	108 lm/W	92

Order Code	Full Product Name	Luminous Flux	Correlated Color Temperature (Nom)	Luminous Efficacy (rated) (Nom)	Color rendering index (CRI)
911401534446	SM378B S P20 927 PSD-E NB D100 G-TT PRO	2,115 lm	2700 K	103 lm/W	92
911401534546	SM378B S P20 930 PSD-E NB D100 G-TT PRO	2,250 lm	3000 K	110 lm/W	92
911401534646	SM378B S P20 940 PSD-E NB D100 G-TT PRO	2,315 lm	4000 K	113 lm/W	92
911401534746	SM378B S P20 927 PSD-E MB D100 G-TT PRO	2,015 lm	2700 K	98 lm/W	92
911401534846	SM378B S P20 930 PSD-E MB D100 G-TT PRO	2,150 lm	3000 K	105 lm/W	92
911401534946	SM378B S P20 940 PSD-E MB D100 G-TT PRO	2,205 lm	4000 K	108 lm/W	92
911401535046	SM378B S P20 927 PSD-E WB D100 G-TT PRO	1,955 lm	2700 K	95 lm/W	92
911401535146	SM378B S P20 930 PSD-E WB D100 G-TT PRO	2,080 lm	3000 K	101 lm/W	92
911401535246	SM378B S P20 940 PSD-E WB D100 G-TT PRO	2,150 lm	4000 K	105 lm/W	92
911401535446	SM378B S P8 927 PSD-E NB D100 G-TT PRO	955 lm	2700 K	106 lm/W	92
911401535546	SM378B S P8 930 PSD-E NB D100 G-TT PRO	1,015 lm	3000 K	113 lm/W	92
911401535646	SM378B S P8 940 PSD-E NB D100 G-TT PRO	1,045 lm	4000 K	116 lm/W	92
911401535746	SM378B S P8 927 PSD-E MB D100 G-TT PRO	900 lm	2700 K	100 lm/W	92
911401535846	SM378B S P8 930 PSD-E MB D100 G-TT PRO	965 lm	3000 K	107 lm/W	92
911401535946	SM378B S P8 940 PSD-E MB D100 G-TT PRO	990 lm	4000 K	110 lm/W	92
911401536046	SM378B S P8 927 PSD-E WB D100 G-TT PRO	875 lm	2700 K	97 lm/W	92
911401536146	SM378B S P8 930 PSD-E WB D100 G-TT PRO	930 lm	3000 K	103 lm/W	92
911401536246	SM378B S P8 940 PSD-E WB D100 G-TT PRO	955 lm	4000 K	106 lm/W	92
911401536346	SM378B S P12 927 PSD-E NB D100 G-TT PRO	1,390 lm	2700 K	107 lm/W	92
911401536446	SM378B S P12 930 PSD-E NB D100 G-TT PRO	1,480 lm	3000 K	114 lm/W	92
911401536546	SM378B S P12 940 PSD-E NB D100 G-TT PRO	1,525 lm	4000 K	117 lm/W	92
911401536646	SM378B S P12 927 PSD-E MB D100 G-TT PRO	1,325 lm	2700 K	102 lm/W	92
911401536746	SM378B S P12 930 PSD-E MB D100 G-TT PRO	1,415 lm	3000 K	109 lm/W	92
911401536846	SM378B S P12 940 PSD-E MB D100 G-TT PRO	1,450 lm	4000 K	112 lm/W	92
911401536946	SM378B S P12 927 PSD-E WB D100 G-TT PRO	1,280 lm	2700 K	98 lm/W	92
911401537046	SM378B S P12 930 PSD-E WB D100 G-TT PRO	1,360 lm	3000 K	105 lm/W	92
911401537146	SM378B S P12 940 PSD-E WB D100 G-TT PRO	1,400 lm	4000 K	108 lm/W	92
911401537246	SM378B S P14 927 PSD-E NB D100 G-TT PRO	1,590 lm	2700 K	110 lm/W	92
911401537346	SM378B S P14 930 PSD-E NB D100 G-TT PRO	1,690 lm	3000 K	117 lm/W	92
911401537446	SM378B S P14 940 PSD-E NB D100 G-TT PRO	1,740 lm	4000 K	120 lm/W	92
911401537546	SM378B S P14 927 PSD-E MB D100 G-TT PRO	1,510 lm	2700 K	104 lm/W	92
911401537646	SM378B S P14 930 PSD-E MB D100 G-TT PRO	1,615 lm	3000 K	111 lm/W	92
911401537746	SM378B S P14 940 PSD-E MB D100 G-TT PRO	1,655 lm	4000 K	114 lm/W	92
911401537846	SM378B S P14 927 PSD-E WB D100 G-TT PRO	1,470 lm	2700 K	101 lm/W	92
911401537946	SM378B S P14 930 PSD-E WB D100 G-TT PRO	1,565 lm	3000 K	108 lm/W	92
911401538046	SM378B S P14 940 PSD-E WB D100 G-TT PRO	1,615 lm	4000 K	111 lm/W	92
911401538146	SM378X S P8 930 WIA MB D100 G-TT PRO	965 lm	3000 K	118 lm/W	92
911401538246	SM378X S P8 930 WIA WB D100 G-TT PRO	930 lm	3000 K	113 lm/W	92
911401538346	SM378X S P12 930 WIA MB D100 G-TT PRO	1,415 lm	3000 K	118 lm/W	92
911401538446	SM378X S P12 930 WIA WB D100 G-TT PRO	1,360 lm	3000 K	113 lm/W	92
911401538546	SM378X S P14 930 WIA MB D100 G-TT PRO	1,615 lm	3000 K	115 lm/W	92
911401538646	SM378X S P14 930 WIA WB D100 G-TT PRO	1,565 lm	3000 K	112 lm/W	92

Order Code	Full Product Name	Luminous Flux	Correlated Color Temperature (Nom)	Luminous Efficacy (rated) (Nom)	Color rendering index (CRI)
911401538746	SM378X S P20 930 WIA MB D100 G-TT PRO	2,150 lm	3000 K	108 lm/W	92
911401538846	SM378X S P20 930 WIA WB D100 G-TT PRO	2,080 lm	3000 K	104 lm/W	92
911401538946	SM378B S P9 PSD-TNW NB D100 G-TT PRO	770 lm	Tunable White	86 lm/W	90
911401539046	SM378B S P9 PSD-TNW MB D100 G-TT PRO	770 lm	Tunable White	86 lm/W	90
911401539146	SM378B S P9 PSD-TNW WB D100 G-TT PRO	750 lm	Tunable White	83 lm/W	90
911401539246	SM378B S P12 PSD-TNW NB D100 G-TT PRO	1,110 lm	Tunable White	85 lm/W	90
911401539346	SM378B S P12 PSD-TNW MB D100 G-TT PRO	1,090 lm	Tunable White	84 lm/W	90
911401539446	SM378B S P12 PSD-TNW WB D100 G-TT PRO	1,070 lm	Tunable White	82 lm/W	90
911401539546	SM378B S P15 PSD-TNW NB D100 G-TT PRO	1,320 lm	Tunable White	85 lm/W	90
911401539646	SM378B S P15 PSD-TNW MB D100 G-TT PRO	1,300 lm	Tunable White	84 lm/W	90
911401539746	SM378B S P15 PSD-TNW WB D100 G-TT PRO	1,270 lm	Tunable White	82 lm/W	90
911401539846	SM378B S P22 PSD-TNW NB D100 G-TT PRO	1,800 lm	Tunable White	82 lm/W	90
911401539946	SM378B S P22 PSD-TNW MB D100 G-TT PRO	1,780 lm	Tunable White	81 lm/W	90
911401540046	SM378B S P22 PSD-TNW WB D100 G-TT PRO	1,740 lm	Tunable White	79 lm/W	90
911401581147	RS378B P7 930 PSD VWB WP D55 M-WH PROCAU	570 lm	3000 K	77 lm/W	92
911401581247	RS378B P7 930 PSD VWB D55 M-WH PROCAU	570 lm	3000 K	77 lm/W	92
911401581547	RS378B P7 930 PSD MB WP D55 M-WH PROCAU	545 lm	3000 K	74 lm/W	92
911401581647	RS378B P7 930 PSD MB D55 M-WH PROCAU	545 lm	3000 K	74 lm/W	92
911401582547	RS378B P12 930 PSD VWB D100 G-TT PROCAU	1,510 lm	3000 K	118 lm/W	92
911401582647	RS378B P12 930 PSD VWB WP D100G-TTPROCAU	1,510 lm	3000 K	118 lm/W	92
911401582947	RS378B P12 930 PSD MB D100 G-TT PROCAU	1,510 lm	3000 K	118 lm/W	92
911401583047	RS378B P12 930 PSD MB WP D100G-TTPROCAU	1,510 lm	3000 K	118 lm/W	92
911401503046	RS378B P12 927 PSU-E NB M55 PRO	1,270 lm	2700 K	101 lm/W	92
911401503146	RS378B P12 930 PSU-E NB M55 PRO	1,330 lm	3000 K	106 lm/W	92
911401503246	RS378B P12 940 PSU-E NB M55 PRO	1,390 lm	4000 K	110 lm/W	92
911401503346	RS378B P12 927 PSU-E MB M55 PRO	1,325 lm	2700 K	105 lm/W	92
911401503446	RS378B P12 930 PSU-E MB M55 PRO	1,390 lm	3000 K	110 lm/W	92
911401503546	RS378B P12 940 PSU-E MB M55 PRO	1,460 lm	4000 K	116 lm/W	92
911401503646	RS378B P12 927 PSU-E WB M55 PRO	1,350 lm	2700 K	107 lm/W	92
911401503746	RS378B P12 930 PSU-E WB M55 PRO	1,450 lm	3000 K	115 lm/W	92
911401503846	RS378B P12 940 PSU-E WB M55 PRO	1,490 lm	4000 K	118 lm/W	92
911401503946	RS378B P14 927 PSU-E NB M55 PRO	1,390 lm	2700 K	96 lm/W	92
911401504046	RS378B P14 930 PSU-E NB M55 PRO	1,480 lm	3000 K	102 lm/W	92
911401504146	RS378B P14 940 PSU-E NB M55 PRO	1,525 lm	4000 K	105 lm/W	92
911401504246	RS378B P14 927 PSU-E MB M55 PRO	1,490 lm	2700 K	103 lm/W	92
911401504346	RS378B P14 930 PSU-E MB M55 PRO	1,585 lm	3000 K	109 lm/W	92
911401504446	RS378B P14 940 PSU-E MB M55 PRO	1,635 lm	4000 K	113 lm/W	92
911401504546	RS378B P14 927 PSU-E WB M55 PRO	1,505 lm	2700 K	104 lm/W	92
911401504646	RS378B P14 930 PSU-E WB M55 PRO	1,600 lm	3000 K	110 lm/W	92
911401504746	RS378B P14 940 PSU-E WB M55 PRO	1,650 lm	4000 K	114 lm/W	92

Order Code	Full Product Name	Luminous Flux	Correlated Color Temperature (Nom)	Luminous Efficacy (rated) (Nom)	Color rendering index (CRI)
911401506946	RS378B P13 927 PSD-E NB M55 PRO	1,270 lm	2700 K	94 lm/W	92
911401507046	RS378B P13 930 PSD-E NB M55 PRO	1,330 lm	3000 K	99 lm/W	92
911401507146	RS378B P13 940 PSD-E NB M55 PRO	1,390 lm	4000 K	103 lm/W	92
911401507246	RS378B P13 927 PSD-E MB M55 PRO	1,325 lm	2700 K	98 lm/W	92
911401507346	RS378B P13 930 PSD-E MB M55 PRO	1,390 lm	3000 K	103 lm/W	92
911401507446	RS378B P13 940 PSD-E MB M55 PRO	1,460 lm	4000 K	108 lm/W	92
911401507546	RS378B P13 927 PSD-E WB M55 PRO	1,350 lm	2700 K	100 lm/W	92
911401507646	RS378B P13 930 PSD-E WB M55 PRO	1,450 lm	3000 K	107 lm/W	92
911401507746	RS378B P13 940 PSD-E WB M55 PRO	1,490 lm	4000 K	110 lm/W	92
911401507846	RS378B P15 927 PSD-E NB M55 PRO	1,390 lm	2700 K	90 lm/W	92
911401507946	RS378B P15 930 PSD-E NB M55 PRO	1,480 lm	3000 K	95 lm/W	92
911401508046	RS378B P15 940 PSD-E NB M55 PRO	1,525 lm	4000 K	98 lm/W	92
911401508146	RS378B P15 927 PSD-E MB M55 PRO	1,490 lm	2700 K	96 lm/W	92
911401508246	RS378B P15 930 PSD-E MB M55 PRO	1,585 lm	3000 K	102 lm/W	92
911401508346	RS378B P15 940 PSD-E MB M55 PRO	1,635 lm	4000 K	105 lm/W	92
911401508446	RS378B P15 927 PSD-E WB M55 PRO	1,505 lm	2700 K	97 lm/W	92
911401508546	RS378B P15 930 PSD-E WB M55 PRO	1,600 lm	3000 K	103 lm/W	92
911401508646	RS378B P15 940 PSD-E WB M55 PRO	1,650 lm	4000 K	106 lm/W	92
911401508946	RS378X P12 930 WIA MB M55 PRO	1,390 lm	3000 K	109 lm/W	92
911401509046	RS378X P12 930 WIA WB M55 PRO	1,450 lm	3000 K	113 lm/W	92
911401509146	RS378X P14 930 WIA MB M55 PRO	1,585 lm	3000 K	106 lm/W	92
911401509246	RS378X P14 930 WIA WB M55 PRO	1,600 lm	3000 K	107 lm/W	92
911401509746	RS378B P12 930 PSU-E MB M55 WP PRO	1,390 lm	3000 K	110 lm/W	92
911401509846	RS378B P12 930 PSU-E WB M55 WP PRO	1,450 lm	3000 K	115 lm/W	92
911401509946	RS378B P14 930 PSU-E MB M55 WP PRO	1,585 lm	3000 K	109 lm/W	92
911401510046	RS378B P14 930 PSU-E WB M55 WP PRO	1,600 lm	3000 K	110 lm/W	92
911401519546	RS378B P13 PSD-TNW NB M55 PRO	960 lm	Tunable White	71 lm/W	90
911401519646	RS378B P13 PSD-TNW MB M55 PRO	990 lm	Tunable White	73 lm/W	90
911401519746	RS378B P13 PSD-TNW WB M55 PRO	1,030 lm	Tunable White	76 lm/W	90
911401519846	RS378B P15 PSD-TNW NB M55 PRO	1,070 lm	Tunable White	71 lm/W	90
911401519946	RS378B P15 PSD-TNW MB M55 PRO	1,100 lm	Tunable White	73 lm/W	90
911401520046	RS378B P15 PSD-TNW WB M55 PRO	1,140 lm	Tunable White	76 lm/W	90
911401581947	RS378B P9 930 PSD VWB WP D75 M-WH PROCAU	895 lm	3000 K	94 lm/W	92
911401582047	RS378B P9 930 PSD VWB D75 M-WH PROCAU	895 lm	3000 K	94 lm/W	92
911401582347	RS378B P9 930 PSD MB WP D75 M-WH PROCAU	920 lm	3000 K	97 lm/W	92
911401582447	RS378B P9 930 PSD MB D75 M-WH PROCAU	920 lm	3000 K	97 lm/W	92

Operating and Electrical

Order Code	Full Product Name	Power Consumption
911401521646	SM378B R P8 927 PSU-E NB D100 G-TT PRO	7.8 W

Order Code	Full Product Name	Power Consumption
911401521746	SM378B R P8 930 PSU-E NB D100 G-TT PRO	7.8 W
911401521846	SM378B R P8 940 PSU-E NB D100 G-TT PRO	7.8 W
911401521946	SM378B R P8 927 PSU-E MB D100 G-TT PRO	7.8 W
911401522046	SM378B R P8 930 PSU-E MB D100 G-TT PRO	7.8 W
911401522146	SM378B R P8 940 PSU-E MB D100 G-TT PRO	7.8 W
911401522246	SM378B R P8 927 PSU-E WB D100 G-TT PRO	7.8 W
911401522346	SM378B R P8 930 PSU-E WB D100 G-TT PRO	7.8 W
911401522446	SM378B R P8 940 PSU-E WB D100 G-TT PRO	7.8 W
911401522546	SM378B R P11 927 PSU-E NB D100 G-TT PRO	11.5 W
911401522646	SM378B R P11 930 PSU-E NB D100 G-TT PRO	11.5 W
911401522746	SM378B R P11 940 PSU-E NB D100 G-TT PRO	11.5 W
911401522846	SM378B R P11 927 PSU-E MB D100 G-TT PRO	11.5 W
911401522946	SM378B R P11 930 PSU-E MB D100 G-TT PRO	11.5 W
911401523046	SM378B R P11 940 PSU-E MB D100 G-TT PRO	11.5 W
911401523146	SM378B R P11 927 PSU-E WB D100 G-TT PRO	11.5 W
911401523246	SM378B R P11 930 PSU-E WB D100 G-TT PRO	11.5 W
911401523346	SM378B R P11 940 PSU-E WB D100 G-TT PRO	11.5 W
911401523446	SM378B R P13 927 PSU-E NB D100 G-TT PRO	13.5 W
911401523546	SM378B R P13 930 PSU-E NB D100 G-TT PRO	13.5 W
911401523646	SM378B R P13 940 PSU-E NB D100 G-TT PRO	13.5 W
911401523746	SM378B R P13 927 PSU-E MB D100 G-TT PRO	13.5 W
911401523846	SM378B R P13 930 PSU-E MB D100 G-TT PRO	13.5 W
911401523946	SM378B R P13 940 PSU-E MB D100 G-TT PRO	13.5 W
911401524046	SM378B R P13 927 PSU-E WB D100 G-TT PRO	13.5 W
911401524146	SM378B R P13 930 PSU-E WB D100 G-TT PRO	13.5 W
911401524246	SM378B R P13 940 PSU-E WB D100 G-TT PRO	13.5 W
911401524346	SM378B R P20 927 PSU-E NB D100 G-TT PRO	20 W
911401524446	SM378B R P20 930 PSU-E NB D100 G-TT PRO	20 W
911401524546	SM378B R P20 940 PSU-E NB D100 G-TT PRO	20 W
911401524646	SM378B R P20 927 PSU-E MB D100 G-TT PRO	20 W
911401524746	SM378B R P20 930 PSU-E MB D100 G-TT PRO	20 W
911401524846	SM378B R P20 940 PSU-E MB D100 G-TT PRO	20 W
911401524946	SM378B R P20 927 PSU-E WB D100 G-TT PRO	20 W
911401525046	SM378B R P20 930 PSU-E WB D100 G-TT PRO	20 W
911401525146	SM378B R P20 940 PSU-E WB D100 G-TT PRO	20 W
911401525246	SM378B R P20 927 PSD-E NB D100 G-TT PRO	20.5 W
911401525346	SM378B R P20 930 PSD-E NB D100 G-TT PRO	20.5 W
911401525446	SM378B R P20 940 PSD-E NB D100 G-TT PRO	20.5 W
911401525546	SM378B R P20 927 PSD-E MB D100 G-TT PRO	20.5 W
911401525646	SM378B R P20 930 PSD-E MB D100 G-TT PRO	20.5 W
911401525746	SM378B R P20 940 PSD-E MB D100 G-TT PRO	20.5 W
911401525846	SM378B R P20 927 PSD-E WB D100 G-TT PRO	20.5 W

Order Code	Full Product Name	Power Consumption
911401525946	SM378B R P20 930 PSD-E WB D100 G-TT PRO	20.5 W
911401526046	SM378B R P20 940 PSD-E WB D100 G-TT PRO	20.5 W
911401526146	SM378B R P8 927 PSD-E NB D100 G-TT PRO	9 W
911401526246	SM378B R P8 930 PSD-E NB D100 G-TT PRO	9 W
911401526346	SM378B R P8 940 PSD-E NB D100 G-TT PRO	9 W
911401526446	SM378B R P8 927 PSD-E MB D100 G-TT PRO	9 W
911401526546	SM378B R P8 930 PSD-E MB D100 G-TT PRO	9 W
911401526646	SM378B R P8 940 PSD-E MB D100 G-TT PRO	9 W
911401526746	SM378B R P8 927 PSD-E WB D100 G-TT PRO	9 W
911401526846	SM378B R P8 930 PSD-E WB D100 G-TT PRO	9 W
911401526946	SM378B R P8 940 PSD-E WB D100 G-TT PRO	9 W
911401527046	SM378B R P12 927 PSD-E NB D100 G-TT PRO	13 W
911401527146	SM378B R P12 930 PSD-E NB D100 G-TT PRO	13 W
911401527246	SM378B R P12 940 PSD-E NB D100 G-TT PRO	13 W
911401527346	SM378B R P12 927 PSD-E MB D100 G-TT PRO	13 W
911401527446	SM378B R P12 930 PSD-E MB D100 G-TT PRO	13 W
911401527546	SM378B R P12 940 PSD-E MB D100 G-TT PRO	13 W
911401527646	SM378B R P12 927 PSD-E WB D100 G-TT PRO	13 W
911401527746	SM378B R P12 930 PSD-E WB D100 G-TT PRO	13 W
911401527846	SM378B R P12 940 PSD-E WB D100 G-TT PRO	13 W
911401527946	SM378B R P14 927 PSD-E NB D100 G-TT PRO	14.5 W
911401528046	SM378B R P14 930 PSD-E NB D100 G-TT PRO	14.5 W
911401528146	SM378B R P14 940 PSD-E NB D100 G-TT PRO	14.5 W
911401528246	SM378B R P14 927 PSD-E MB D100 G-TT PRO	14.5 W
911401528346	SM378B R P14 930 PSD-E MB D100 G-TT PRO	14.5 W
911401528446	SM378B R P14 940 PSD-E MB D100 G-TT PRO	14.5 W
911401528546	SM378B R P14 927 PSD-E WB D100 G-TT PRO	14.5 W
911401528646	SM378B R P14 930 PSD-E WB D100 G-TT PRO	14.5 W
911401528746	SM378B R P14 940 PSD-E WB D100 G-TT PRO	14.5 W
911401528846	SM378X R P8 930 WIA MB D100 G-TT PRO	8.2 W
911401528946	SM378X R P8 930 WIA WB D100 G-TT PRO	8.2 W
911401529046	SM378X R P12 930 WIA MB D100 G-TT PRO	12 W
911401529146	SM378X R P12 930 WIA WB D100 G-TT PRO	12 W
911401529246	SM378X R P14 930 WIA MB D100 G-TT PRO	14 W
911401529346	SM378X R P14 930 WIA WB D100 G-TT PRO	14 W
911401529446	SM378X R P20 930 WIA MB D100 G-TT PRO	20 W
911401529546	SM378X R P20 930 WIA WB D100 G-TT PRO	20 W
911401529646	SM378B R P9 PSD-TNW NB D100 G-TT PRO	9 W
911401529746	SM378B R P9 PSD-TNW MB D100 G-TT PRO	9 W
911401529846	SM378B R P9 PSD-TNW WB D100 G-TT PRO	9 W
911401529946	SM378B R P12 PSD-TNW NB D100 G-TT PRO	13 W
911401530046	SM378B R P12 PSD-TNW MB D100 G-TT PRO	13 W

Order Code	Full Product Name	Power Consumption
911401530146	SM378B R P12 PSD-TNW WB D100 G-TT PRO	13 W
911401530246	SM378B R P15 PSD-TNW NB D100 G-TT PRO	15.5 W
911401530346	SM378B R P15 PSD-TNW MB D100 G-TT PRO	15.5 W
911401530446	SM378B R P15 PSD-TNW WB D100 G-TT PRO	15.5 W
911401530546	SM378B R P22 PSD-TNW NB D100 G-TT PRO	22 W
911401530646	SM378B R P22 PSD-TNW MB D100 G-TT PRO	22 W
911401530746	SM378B R P22 PSD-TNW WB D100 G-TT PRO	22 W
911401581747	RS378B P9 930 PSD VWB D75 G-TT PROCAU	9.5 W
911401581847	RS378B P9 930 PSD VWB WP D75 G-TT PROCAU	9.5 W
911401582147	RS378B P9 930 PSD MB D75 G-TT PROCAU	9.5 W
911401582247	RS378B P9 930 PSD MB WP D75 G-TT PROCAU	9.5 W
911401500046	RS378B P7 930 PSD-E WB M43 PRO	7.4 W
911401500146	RS378B P7 940 PSD-E WB M43 PRO	7.4 W
911401500246	RS378B P6 930 PSU-E MB M43 WP PRO	5.9 W
911401500346	RS378B P6 930 PSU-E WB M43 WP PRO	5.9 W
911401500446	RS378B P8 930 PSU-E MB M43 WP PRO	8 W
911401500546	RS378B P8 930 PSU-E WB M43 WP PRO	8 W
911401520146	RS378B P7 PSD-TNW NB M43 PRO	7.5 W
911401520246	RS378B P7 PSD-TNW MB M43 PRO	7.5 W
911401520346	RS378B P7 PSD-TNW WB M43 PRO	7.5 W
911401596945	RS378B P6 927 PSU-E SNB M43 PRO	6.5 W
911401597045	RS378B P6 930 PSU-E SNB M43 PRO	6.5 W
911401597145	RS378B P6 940 PSU-E SNB M43 PRO	6.5 W
911401597245	RS378B P6 927 PSU-E NB M43 PRO	5.9 W
911401597345	RS378B P6 930 PSU-E NB M43 PRO	5.9 W
911401597445	RS378B P6 940 PSU-E NB M43 PRO	5.9 W
911401597545	RS378B P6 927 PSU-E MB M43 PRO	5.9 W
911401597645	RS378B P6 930 PSU-E MB M43 PRO	5.9 W
911401597745	RS378B P6 940 PSU-E MB M43 PRO	5.9 W
911401597845	RS378B P6 927 PSU-E WB M43 PRO	5.9 W
911401597945	RS378B P6 930 PSU-E WB M43 PRO	5.9 W
911401598045	RS378B P6 940 PSU-E WB M43 PRO	5.9 W
911401598145	RS378B P8 927 PSU-E NB M43 PRO	8 W
911401598245	RS378B P8 930 PSU-E NB M43 PRO	8 W
911401598345	RS378B P8 940 PSU-E NB M43 PRO	8 W
911401598445	RS378B P8 927 PSU-E MB M43 PRO	8 W
911401598545	RS378B P8 930 PSU-E MB M43 PRO	8 W
911401598645	RS378B P8 940 PSU-E MB M43 PRO	8 W
911401598745	RS378B P8 927 PSU-E WB M43 PRO	8 W
911401598845	RS378B P8 930 PSU-E WB M43 PRO	8 W
911401598945	RS378B P8 940 PSU-E WB M43 PRO	8 W
911401599045	RS378B P7 927 PSD-E SNB M43 PRO	7.5 W

Order Code	Full Product Name	Power Consumption
911401599145	RS378B P7 930 PSD-E SNB M43 PRO	7.5 W
911401599245	RS378B P7 940 PSD-E SNB M43 PRO	7.5 W
911401599345	RS378B P7 927 PSD-E NB M43 PRO	7.4 W
911401599445	RS378B P7 930 PSD-E NB M43 PRO	7.4 W
911401599545	RS378B P7 940 PSD-E NB M43 PRO	7.4 W
911401599645	RS378B P7 927 PSD-E MB M43 PRO	7.4 W
911401599745	RS378B P7 930 PSD-E MB M43 PRO	7.4 W
911401599845	RS378B P7 940 PSD-E MB M43 PRO	7.4 W
911401599945	RS378B P7 927 PSD-E WB M43 PRO	7.4 W
911401582747	RS378B P12 930 PSD VWB WP D100M-WHPROCAU	12.8 W
911401582847	RS378B P12 930 PSD VWB D100 M-WH PROCAU	12.8 W
911401583147	RS378B P12 930 PSD MB WP D100M-WHPROCAU	12.8 W
911401583247	RS378B P12 930 PSD MB D100 M-WH PROCAU	12.8 W
911401500646	RS378B P7 927 PSU-E SNB M55 PRO	7.2 W
911401500746	RS378B P7 930 PSU-E SNB M55 PRO	7.2 W
911401500846	RS378B P7 940 PSU-E SNB M55 PRO	7.2 W
911401500946	RS378B P7 927 PSU-E NB M55 PRO	7.1 W
911401501046	RS378B P7 930 PSU-E NB M55 PRO	7.1 W
911401501146	RS378B P7 940 PSU-E NB M55 PRO	7.1 W
911401501246	RS378B P7 927 PSU-E MB M55 PRO	7.1 W
911401501346	RS378B P7 930 PSU-E MB M55 PRO	7.1 W
911401501446	RS378B P7 940 PSU-E MB M55 PRO	7.1 W
911401501546	RS378B P7 927 PSU-E WB M55 PRO	7.1 W
911401501646	RS378B P7 930 PSU-E WB M55 PRO	7.1 W
911401501746	RS378B P7 940 PSU-E WB M55 PRO	7.1 W
911401501846	RS378B P8 927 PSU-E SNB M55 PRO	8 W
911401501946	RS378B P8 930 PSU-E SNB M55 PRO	8 W
911401502046	RS378B P8 940 PSU-E SNB M55 PRO	8 W
911401502146	RS378B P9 927 PSU-E NB M55 PRO	9 W
911401502246	RS378B P9 930 PSU-E NB M55 PRO	9 W
911401502346	RS378B P9 940 PSU-E NB M55 PRO	9 W
911401502446	RS378B P9 927 PSU-E MB M55 PRO	9 W
911401502546	RS378B P9 930 PSU-E MB M55 PRO	9 W
911401502646	RS378B P9 940 PSU-E MB M55 PRO	9 W
911401502746	RS378B P9 927 PSU-E WB M55 PRO	9 W
911401502846	RS378B P9 930 PSU-E WB M55 PRO	9 W
911401502946	RS378B P9 940 PSU-E WB M55 PRO	9 W
911401504846	RS378B P7 927 PSD-E SNB M55 PRO	7.5 W
911401504946	RS378B P7 930 PSD-E SNB M55 PRO	7.5 W
911401505046	RS378B P7 940 PSD-E SNB M55 PRO	7.5 W
911401505146	RS378B P7 927 PSD-E NB M55 PRO	7.3 W
911401505246	RS378B P7 930 PSD-E NB M55 PRO	7.3 W

Order Code	Full Product Name	Power Consumption
911401505346	RS378B P7 940 PSD-E NB M55 PRO	7.3 W
911401505446	RS378B P7 927 PSD-E MB M55 PRO	7.3 W
911401505546	RS378B P7 930 PSD-E MB M55 PRO	7.3 W
911401505646	RS378B P7 940 PSD-E MB M55 PRO	7.3 W
911401505746	RS378B P7 927 PSD-E WB M55 PRO	7.3 W
911401505846	RS378B P7 930 PSD-E WB M55 PRO	7.3 W
911401505946	RS378B P7 940 PSD-E WB M55 PRO	7.3 W
911401506046	RS378B P9 927 PSD-E NB M55 PRO	9.5 W
911401506146	RS378B P9 930 PSD-E NB M55 PRO	9.5 W
911401506246	RS378B P9 940 PSD-E NB M55 PRO	9.5 W
911401506346	RS378B P9 927 PSD-E MB M55 PRO	9.5 W
911401506446	RS378B P9 930 PSD-E MB M55 PRO	9.5 W
911401506546	RS378B P9 940 PSD-E MB M55 PRO	9.5 W
911401506646	RS378B P9 927 PSD-E WB M55 PRO	9.5 W
911401506746	RS378B P9 930 PSD-E WB M55 PRO	9.5 W
911401506846	RS378B P9 940 PSD-E WB M55 PRO	9.5 W
911401508746	RS378X P9 930 WIA MB M55 PRO	8.7 W
911401508846	RS378X P9 930 WIA WB M55 PRO	8.7 W
911401509346	RS378B P7 930 PSU-E MB M55 WP PRO	7.1 W
911401509446	RS378B P7 930 PSU-E WB M55 WP PRO	7.1 W
911401509546	RS378B P9 930 PSU-E MB M55 WP PRO	9 W
911401509646	RS378B P9 930 PSU-E WB M55 WP PRO	9 W
911401518946	RS378B P7 PSD-TNW NB M55 PRO	7.1 W
911401519046	RS378B P7 PSD-TNW MB M55 PRO	7.1 W
911401519146	RS378B P7 PSD-TNW WB M55 PRO	7.1 W
911401519246	RS378B P9 PSD-TNW NB M55 PRO	9 W
911401519346	RS378B P9 PSD-TNW MB M55 PRO	9 W
911401519446	RS378B P9 PSD-TNW WB M55 PRO	9 W
911401595145	RS378B P3 927 PSU-E MB D35 G-TT PRO	3.1 W
911401595245	RS378B P3 930 PSU-E MB D35 G-TT PRO	3.1 W
911401595345	RS378B P3 940 PSU-E MB D35 G-TT PRO	3.1 W
911401595445	RS378B P3 927 PSU-E WB D35 G-TT PRO	3.1 W
911401595545	RS378B P3 930 PSU-E WB D35 G-TT PRO	3.1 W
911401595645	RS378B P3 940 PSU-E WB D35 G-TT PRO	3.1 W
911401595745	RS378B P5 927 PSU-E MB D35 G-TT PRO	4.7 W
911401595845	RS378B P5 930 PSU-E MB D35 G-TT PRO	4.7 W
911401595945	RS378B P5 940 PSU-E MB D35 G-TT PRO	4.7 W
911401596045	RS378B P5 927 PSU-E WB D35 G-TT PRO	4.7 W
911401596145	RS378B P5 930 PSU-E WB D35 G-TT PRO	4.7 W
911401596245	RS378B P5 940 PSU-E WB D35 G-TT PRO	4.7 W
911401596345	RS378B P5 927 PSD-E MB D35 G-TT PRO	5.3 W
911401596445	RS378B P5 930 PSD-E MB D35 G-TT PRO	5.3 W

Order Code	Full Product Name	Power Consumption
911401596545	RS378B P5 940 PSD-E MB D35 G-TT PRO	5.3 W
911401596645	RS378B P5 927 PSD-E WB D35 G-TT PRO	5.3 W
911401596745	RS378B P5 930 PSD-E WB D35 G-TT PRO	5.3 W
911401596845	RS378B P5 940 PSD-E WB D35 G-TT PRO	5.3 W
911401510146	RS378B P12 927 PSU-E NB M70 PRO	12 W
911401510246	RS378B P12 930 PSU-E NB M70 PRO	12 W
911401510346	RS378B P12 940 PSU-E NB M70 PRO	12 W
911401510446	RS378B P12 927 PSU-E MB M70 PRO	12 W
911401510546	RS378B P12 930 PSU-E MB M70 PRO	12 W
911401510646	RS378B P12 940 PSU-E MB M70 PRO	12 W
911401510746	RS378B P12 927 PSU-E WB M70 PRO	12 W
911401510846	RS378B P12 930 PSU-E WB M70 PRO	12 W
911401510946	RS378B P12 940 PSU-E WB M70 PRO	12 W
911401511046	RS378B P17 927 PSU-E NB M70 PRO	17.5 W
911401511146	RS378B P17 930 PSU-E NB M70 PRO	17.5 W
911401511246	RS378B P17 940 PSU-E NB M70 PRO	17.5 W
911401511346	RS378B P17 927 PSU-E MB M70 PRO	17.5 W
911401511446	RS378B P17 930 PSU-E MB M70 PRO	17.5 W
911401511546	RS378B P17 940 PSU-E MB M70 PRO	17.5 W
911401511646	RS378B P17 927 PSU-E WB M70 PRO	17.5 W
911401511746	RS378B P17 930 PSU-E WB M70 PRO	17.5 W
911401511846	RS378B P17 940 PSU-E WB M70 PRO	17.5 W
911401511946	RS378B P19 927 PSU-E NB M70 PRO	19.5 W
911401512046	RS378B P19 930 PSU-E NB M70 PRO	19.5 W
911401512146	RS378B P19 940 PSU-E NB M70 PRO	19.5 W
911401512246	RS378B P19 927 PSU-E MB M70 PRO	19.5 W
911401512346	RS378B P19 930 PSU-E MB M70 PRO	19.5 W
911401512446	RS378B P19 940 PSU-E MB M70 PRO	19.5 W
911401512546	RS378B P19 927 PSU-E WB M70 PRO	19.5 W
911401512646	RS378B P19 930 PSU-E WB M70 PRO	19.5 W
911401512746	RS378B P19 940 PSU-E WB M70 PRO	19.5 W
911401513746	RS378B P12 927 PSD-E NB M70 PRO	12.8 W
911401513846	RS378B P12 930 PSD-E NB M70 PRO	12.8 W
911401513946	RS378B P12 940 PSD-E NB M70 PRO	12.8 W
911401514046	RS378B P12 927 PSD-E MB M70 PRO	12.8 W
911401514146	RS378B P12 930 PSD-E MB M70 PRO	12.8 W
911401514246	RS378B P12 940 PSD-E MB M70 PRO	12.8 W
911401514346	RS378B P12 927 PSD-E WB M70 PRO	12.8 W
911401514446	RS378B P12 930 PSD-E WB M70 PRO	12.8 W
911401514546	RS378B P12 940 PSD-E WB M70 PRO	12.8 W
911401514646	RS378B P18 927 PSD-E NB M70 PRO	18.5 W
911401514746	RS378B P18 930 PSD-E NB M70 PRO	18.5 W

Order Code	Full Product Name	Power Consumption
911401514846	RS378B P18 940 PSD-E NB M70 PRO	18.5 W
911401514946	RS378B P18 927 PSD-E MB M70 PRO	18.5 W
911401515046	RS378B P18 930 PSD-E MB M70 PRO	18.5 W
911401515146	RS378B P18 940 PSD-E MB M70 PRO	18.5 W
911401515246	RS378B P18 927 PSD-E WB M70 PRO	18.5 W
911401515346	RS378B P18 930 PSD-E WB M70 PRO	18.5 W
911401515446	RS378B P18 940 PSD-E WB M70 PRO	18.5 W
911401515546	RS378B P20 927 PSD-E NB M70 PRO	20.5 W
911401515646	RS378B P20 930 PSD-E NB M70 PRO	20.5 W
911401515746	RS378B P20 940 PSD-E NB M70 PRO	20.5 W
911401515846	RS378B P20 927 PSD-E MB M70 PRO	20.5 W
911401515946	RS378B P20 930 PSD-E MB M70 PRO	20.5 W
911401516046	RS378B P20 940 PSD-E MB M70 PRO	20.5 W
911401516146	RS378B P20 927 PSD-E WB M70 PRO	20.5 W
911401516246	RS378B P20 930 PSD-E WB M70 PRO	20.5 W
911401516346	RS378B P20 940 PSD-E WB M70 PRO	20.5 W
911401517346	RS378X P12 930 WIA MB M70 PRO	12 W
911401517446	RS378X P12 930 WIA WB M70 PRO	12 W
911401517546	RS378X P19 930 WIA MB M70 PRO	20 W
911401517646	RS378X P19 930 WIA WB M70 PRO	20 W
911401517746	RS378X P18 930 WIA MB M70 PRO	18 W
911401517846	RS378X P18 930 WIA WB M70 PRO	18 W
911401518146	RS378B P12 930 PSU-E MB M70 WP PRO	12 W
911401518246	RS378B P12 930 PSU-E WB M70 WP PRO	12 W
911401518346	RS378B P17 930 PSU-E MB M70 WP PRO	17.5 W
911401518446	RS378B P17 930 PSU-E WB M70 WP PRO	17.5 W
911401518546	RS378B P19 930 PSU-E MB M70 WP PRO	19.5 W
911401518646	RS378B P19 930 PSU-E WB M70 WP PRO	19.5 W
911401520446	RS378B P13 PSD-TNW NB M70 PRO	13.5 W
911401520546	RS378B P13 PSD-TNW MB M70 PRO	13.5 W
911401520646	RS378B P13 PSD-TNW WB M70 PRO	13.5 W
911401520746	RS378B P19 PSD-TNW NB M70 PRO	20 W
911401520846	RS378B P19 PSD-TNW MB M70 PRO	20 W
911401520946	RS378B P19 PSD-TNW WB M70 PRO	20 W
911401521046	RS378B P22 PSD-TNW NB M70 PRO	22 W
911401521146	RS378B P22 PSD-TNW MB M70 PRO	22 W
911401521246	RS378B P22 PSD-TNW WB M70 PRO	22 W
911401512846	RS378B P27 927 PSU-E NB M70 PRO	27.5 W
911401512946	RS378B P27 930 PSU-E NB M70 PRO	27.5 W
911401513046	RS378B P27 940 PSU-E NB M70 PRO	27.5 W
911401513146	RS378B P27 927 PSU-E MB M70 PRO	27.5 W
911401513246	RS378B P27 930 PSU-E MB M70 PRO	27.5 W

Order Code	Full Product Name	Power Consumption
911401513346	RS378B P27 940 PSU-E MB M70 PRO	27.5 W
911401513446	RS378B P27 927 PSU-E WB M70 PRO	27.5 W
911401513546	RS378B P27 930 PSU-E WB M70 PRO	27.5 W
911401513646	RS378B P27 940 PSU-E WB M70 PRO	27.5 W
911401516446	RS378B P27 927 PSD-E NB M70 PRO	27 W
911401516546	RS378B P27 930 PSD-E NB M70 PRO	27 W
911401516646	RS378B P27 940 PSD-E NB M70 PRO	27 W
911401516746	RS378B P27 927 PSD-E MB M70 PRO	27 W
911401516846	RS378B P27 930 PSD-E MB M70 PRO	27 W
911401516946	RS378B P27 940 PSD-E MB M70 PRO	27 W
911401517046	RS378B P27 927 PSD-E WB M70 PRO	27 W
911401517146	RS378B P27 930 PSD-E WB M70 PRO	27 W
911401517246	RS378B P27 940 PSD-E WB M70 PRO	27 W
911401517946	RS378X P28 930 WIA MB M70 PRO	28.5 W
911401518046	RS378X P28 930 WIA WB M70 PRO	28.5 W
911401518746	RS378B P27 930 PSU-E MB M70 WP PRO	27.5 W
911401518846	RS378B P27 930 PSU-E WB M70 WP PRO	27.5 W
911401521346	RS378B P29 PSD-TNW NB M70 PRO	28 W
911401521446	RS378B P29 PSD-TNW MB M70 PRO	28 W
911401521546	RS378B P29 PSD-TNW WB M70 PRO	28 W
911401580947	RS378B P7 930 PSD VWB D55 G-TT PROCAU	7.4 W
911401581047	RS378B P7 930 PSD VWB WP D55 G-TT PROCAU	7.4 W
911401581347	RS378B P7 930 PSD MB D55 G-TT PROCAU	7.4 W
911401581447	RS378B P7 930 PSD MB WP D55 G-TT PROCAU	7.4 W
911401530846	SM378B S P8 927 PSU-E NB D100 G-TT PRO	7.8 W
911401530946	SM378B S P8 930 PSU-E NB D100 G-TT PRO	7.8 W
911401531046	SM378B S P8 940 PSU-E NB D100 G-TT PRO	7.8 W
911401531146	SM378B S P8 927 PSU-E MB D100 G-TT PRO	7.8 W
911401531246	SM378B S P8 930 PSU-E MB D100 G-TT PRO	7.8 W
911401531346	SM378B S P8 940 PSU-E MB D100 G-TT PRO	7.8 W
911401531446	SM378B S P8 927 PSU-E WB D100 G-TT PRO	7.8 W
911401531546	SM378B S P8 930 PSU-E WB D100 G-TT PRO	7.8 W
911401531646	SM378B S P8 940 PSU-E WB D100 G-TT PRO	7.8 W
911401531746	SM378B S P11 927 PSU-E NB D100 G-TT PRO	11.5 W
911401531846	SM378B S P11 930 PSU-E NB D100 G-TT PRO	11.5 W
911401531946	SM378B S P11 940 PSU-E NB D100 G-TT PRO	11.5 W
911401532046	SM378B S P11 927 PSU-E MB D100 G-TT PRO	11.5 W
911401532146	SM378B S P11 930 PSU-E MB D100 G-TT PRO	11.5 W
911401532246	SM378B S P11 940 PSU-E MB D100 G-TT PRO	11.5 W
911401532346	SM378B S P11 927 PSU-E WB D100 G-TT PRO	11.5 W
911401532446	SM378B S P11 930 PSU-E WB D100 G-TT PRO	11.5 W
911401532546	SM378B S P11 940 PSU-E WB D100 G-TT PRO	11.5 W

Order Code	Full Product Name	Power Consumption
911401532646	SM378B S P13 927 PSU-E NB D100 G-TT PRO	13.5 W
911401532746	SM378B S P13 930 PSU-E NB D100 G-TT PRO	13.5 W
911401532846	SM378B S P13 940 PSU-E NB D100 G-TT PRO	13.5 W
911401532946	SM378B S P13 927 PSU-E MB D100 G-TT PRO	13.5 W
911401533046	SM378B S P13 930 PSU-E MB D100 G-TT PRO	13.5 W
911401533146	SM378B S P13 940 PSU-E MB D100 G-TT PRO	13.5 W
911401533246	SM378B S P13 927 PSU-E WB D100 G-TT PRO	13.5 W
911401533346	SM378B S P13 930 PSU-E WB D100 G-TT PRO	13.5 W
911401533446	SM378B S P13 940 PSU-E WB D100 G-TT PRO	13.5 W
911401533546	SM378B S P20 927 PSU-E NB D100 G-TT PRO	20 W
911401533646	SM378B S P20 930 PSU-E NB D100 G-TT PRO	20 W
911401533746	SM378B S P20 940 PSU-E NB D100 G-TT PRO	20 W
911401533846	SM378B S P20 927 PSU-E MB D100 G-TT PRO	20 W
911401533946	SM378B S P20 930 PSU-E MB D100 G-TT PRO	20 W
911401534046	SM378B S P20 940 PSU-E MB D100 G-TT PRO	20 W
911401534146	SM378B S P20 927 PSU-E WB D100 G-TT PRO	20 W
911401534246	SM378B S P20 930 PSU-E WB D100 G-TT PRO	20 W
911401534346	SM378B S P20 940 PSU-E WB D100 G-TT PRO	20 W
911401534446	SM378B S P20 927 PSD-E NB D100 G-TT PRO	20.5 W
911401534546	SM378B S P20 930 PSD-E NB D100 G-TT PRO	20.5 W
911401534646	SM378B S P20 940 PSD-E NB D100 G-TT PRO	20.5 W
911401534746	SM378B S P20 927 PSD-E MB D100 G-TT PRO	20.5 W
911401534846	SM378B S P20 930 PSD-E MB D100 G-TT PRO	20.5 W
911401534946	SM378B S P20 940 PSD-E MB D100 G-TT PRO	20.5 W
911401535046	SM378B S P20 927 PSD-E WB D100 G-TT PRO	20.5 W
911401535146	SM378B S P20 930 PSD-E WB D100 G-TT PRO	20.5 W
911401535246	SM378B S P20 940 PSD-E WB D100 G-TT PRO	20.5 W
911401535446	SM378B S P8 927 PSD-E NB D100 G-TT PRO	9 W
911401535546	SM378B S P8 930 PSD-E NB D100 G-TT PRO	9 W
911401535646	SM378B S P8 940 PSD-E NB D100 G-TT PRO	9 W
911401535746	SM378B S P8 927 PSD-E MB D100 G-TT PRO	9 W
911401535846	SM378B S P8 930 PSD-E MB D100 G-TT PRO	9 W
911401535946	SM378B S P8 940 PSD-E MB D100 G-TT PRO	9 W
911401536046	SM378B S P8 927 PSD-E WB D100 G-TT PRO	9 W
911401536146	SM378B S P8 930 PSD-E WB D100 G-TT PRO	9 W
911401536246	SM378B S P8 940 PSD-E WB D100 G-TT PRO	9 W
911401536346	SM378B S P12 927 PSD-E NB D100 G-TT PRO	13 W
911401536446	SM378B S P12 930 PSD-E NB D100 G-TT PRO	13 W
911401536546	SM378B S P12 940 PSD-E NB D100 G-TT PRO	13 W
911401536646	SM378B S P12 927 PSD-E MB D100 G-TT PRO	13 W
911401536746	SM378B S P12 930 PSD-E MB D100 G-TT PRO	13 W
911401536846	SM378B S P12 940 PSD-E MB D100 G-TT PRO	13 W

Order Code	Full Product Name	Power Consumption
911401536946	SM378B S P12 927 PSD-E WB D100 G-TT PRO	13 W
911401537046	SM378B S P12 930 PSD-E WB D100 G-TT PRO	13 W
911401537146	SM378B S P12 940 PSD-E WB D100 G-TT PRO	13 W
911401537246	SM378B S P14 927 PSD-E NB D100 G-TT PRO	14.5 W
911401537346	SM378B S P14 930 PSD-E NB D100 G-TT PRO	14.5 W
911401537446	SM378B S P14 940 PSD-E NB D100 G-TT PRO	14.5 W
911401537546	SM378B S P14 927 PSD-E MB D100 G-TT PRO	14.5 W
911401537646	SM378B S P14 930 PSD-E MB D100 G-TT PRO	14.5 W
911401537746	SM378B S P14 940 PSD-E MB D100 G-TT PRO	14.5 W
911401537846	SM378B S P14 927 PSD-E WB D100 G-TT PRO	14.5 W
911401537946	SM378B S P14 930 PSD-E WB D100 G-TT PRO	14.5 W
911401538046	SM378B S P14 940 PSD-E WB D100 G-TT PRO	14.5 W
911401538146	SM378X S P8 930 WIA MB D100 G-TT PRO	8.2 W
911401538246	SM378X S P8 930 WIA WB D100 G-TT PRO	8.2 W
911401538346	SM378X S P12 930 WIA MB D100 G-TT PRO	12 W
911401538446	SM378X S P12 930 WIA WB D100 G-TT PRO	12 W
911401538546	SM378X S P14 930 WIA MB D100 G-TT PRO	14 W
911401538646	SM378X S P14 930 WIA WB D100 G-TT PRO	14 W
911401538746	SM378X S P20 930 WIA MB D100 G-TT PRO	20 W
911401538846	SM378X S P20 930 WIA WB D100 G-TT PRO	20 W
911401538946	SM378B S P9 PSD-TNW NB D100 G-TT PRO	9 W
911401539046	SM378B S P9 PSD-TNW MB D100 G-TT PRO	9 W
911401539146	SM378B S P9 PSD-TNW WB D100 G-TT PRO	9 W
911401539246	SM378B S P12 PSD-TNW NB D100 G-TT PRO	13 W
911401539346	SM378B S P12 PSD-TNW MB D100 G-TT PRO	13 W
911401539446	SM378B S P12 PSD-TNW WB D100 G-TT PRO	13 W
911401539546	SM378B S P15 PSD-TNW NB D100 G-TT PRO	15.5 W
911401539646	SM378B S P15 PSD-TNW MB D100 G-TT PRO	15.5 W
911401539746	SM378B S P15 PSD-TNW WB D100 G-TT PRO	15.5 W
911401539846	SM378B S P22 PSD-TNW NB D100 G-TT PRO	22 W
911401539946	SM378B S P22 PSD-TNW MB D100 G-TT PRO	22 W
911401540046	SM378B S P22 PSD-TNW WB D100 G-TT PRO	22 W
911401581147	RS378B P7 930 PSD VWB WP D55 M-WH PROCAU	7.4 W
911401581247	RS378B P7 930 PSD VWB D55 M-WH PROCAU	7.4 W
911401581547	RS378B P7 930 PSD MB WP D55 M-WH PROCAU	7.4 W
911401581647	RS378B P7 930 PSD MB D55 M-WH PROCAU	7.4 W
911401582547	RS378B P12 930 PSD VWB D100 G-TT PROCAU	12.8 W
911401582647	RS378B P12 930 PSD VWB WP D100G-TTPROCAU	12.8 W
911401582947	RS378B P12 930 PSD MB D100 G-TT PROCAU	12.8 W
911401583047	RS378B P12 930 PSD MB WP D100G-TTPROCAU	12.8 W
911401503046	RS378B P12 927 PSU-E NB M55 PRO	12.6 W
911401503146	RS378B P12 930 PSU-E NB M55 PRO	12.6 W

Order Code	Full Product Name	Power Consumption
911401503246	RS378B P12 940 PSU-E NB M55 PRO	12.6 W
911401503346	RS378B P12 927 PSU-E MB M55 PRO	12.6 W
911401503446	RS378B P12 930 PSU-E MB M55 PRO	12.6 W
911401503546	RS378B P12 940 PSU-E MB M55 PRO	12.6 W
911401503646	RS378B P12 927 PSU-E WB M55 PRO	12.6 W
911401503746	RS378B P12 930 PSU-E WB M55 PRO	12.6 W
911401503846	RS378B P12 940 PSU-E WB M55 PRO	12.6 W
911401503946	RS378B P14 927 PSU-E NB M55 PRO	14.5 W
911401504046	RS378B P14 930 PSU-E NB M55 PRO	14.5 W
911401504146	RS378B P14 940 PSU-E NB M55 PRO	14.5 W
911401504246	RS378B P14 927 PSU-E MB M55 PRO	14.5 W
911401504346	RS378B P14 930 PSU-E MB M55 PRO	14.5 W
911401504446	RS378B P14 940 PSU-E MB M55 PRO	14.5 W
911401504546	RS378B P14 927 PSU-E WB M55 PRO	14.5 W
911401504646	RS378B P14 930 PSU-E WB M55 PRO	14.5 W
911401504746	RS378B P14 940 PSU-E WB M55 PRO	14.5 W
911401506946	RS378B P13 927 PSD-E NB M55 PRO	13.5 W
911401507046	RS378B P13 930 PSD-E NB M55 PRO	13.5 W
911401507146	RS378B P13 940 PSD-E NB M55 PRO	13.5 W
911401507246	RS378B P13 927 PSD-E MB M55 PRO	13.5 W
911401507346	RS378B P13 930 PSD-E MB M55 PRO	13.5 W
911401507446	RS378B P13 940 PSD-E MB M55 PRO	13.5 W
911401507546	RS378B P13 927 PSD-E WB M55 PRO	13.5 W
911401507646	RS378B P13 930 PSD-E WB M55 PRO	13.5 W
911401507746	RS378B P13 940 PSD-E WB M55 PRO	13.5 W
911401507846	RS378B P15 927 PSD-E NB M55 PRO	15.5 W
911401507946	RS378B P15 930 PSD-E NB M55 PRO	15.5 W
911401508046	RS378B P15 940 PSD-E NB M55 PRO	15.5 W
911401508146	RS378B P15 927 PSD-E MB M55 PRO	15.5 W
911401508246	RS378B P15 930 PSD-E MB M55 PRO	15.5 W
911401508346	RS378B P15 940 PSD-E MB M55 PRO	15.5 W
911401508446	RS378B P15 927 PSD-E WB M55 PRO	15.5 W
911401508546	RS378B P15 930 PSD-E WB M55 PRO	15.5 W
911401508646	RS378B P15 940 PSD-E WB M55 PRO	15.5 W
911401508946	RS378X P12 930 WIA MB M55 PRO	12.8 W
911401509046	RS378X P12 930 WIA WB M55 PRO	12.8 W
911401509146	RS378X P14 930 WIA MB M55 PRO	15 W
911401509246	RS378X P14 930 WIA WB M55 PRO	15 W
911401509746	RS378B P12 930 PSU-E MB M55 WP PRO	12.6 W
911401509846	RS378B P12 930 PSU-E WB M55 WP PRO	12.6 W
911401509946	RS378B P14 930 PSU-E MB M55 WP PRO	14.5 W
911401510046	RS378B P14 930 PSU-E WB M55 WP PRO	14.5 W

Order Code	Full Product Name	Power Consumption
911401519546	RS378B P13 PSD-TNW NB M55 PRO	13.5 W
911401519646	RS378B P13 PSD-TNW MB M55 PRO	13.5 W
911401519746	RS378B P13 PSD-TNW WB M55 PRO	13.5 W
911401519846	RS378B P15 PSD-TNW NB M55 PRO	15 W
911401519946	RS378B P15 PSD-TNW MB M55 PRO	15 W
911401520046	RS378B P15 PSD-TNW WB M55 PRO	15 W
911401581947	RS378B P9 930 PSD VWB WP D75 M-WH PROCAU	9.5 W
911401582047	RS378B P9 930 PSD VWB D75 M-WH PROCAU	9.5 W
911401582347	RS378B P9 930 PSD MB WP D75 M-WH PROCAU	9.5 W
911401582447	RS378B P9 930 PSD MB D75 M-WH PROCAU	9.5 W

Controls and Dimming

Order Code	Full Product Name	Dimmable
911401521646	SM378B R P8 927 PSU-E NB D100 G-TT PRO	-
911401521746	SM378B R P8 930 PSU-E NB D100 G-TT PRO	-
911401521846	SM378B R P8 940 PSU-E NB D100 G-TT PRO	-
911401521946	SM378B R P8 927 PSU-E MB D100 G-TT PRO	-
911401522046	SM378B R P8 930 PSU-E MB D100 G-TT PRO	-
911401522146	SM378B R P8 940 PSU-E MB D100 G-TT PRO	-
911401522246	SM378B R P8 927 PSU-E WB D100 G-TT PRO	-
911401522346	SM378B R P8 930 PSU-E WB D100 G-TT PRO	-
911401522446	SM378B R P8 940 PSU-E WB D100 G-TT PRO	-
911401522546	SM378B R P11 927 PSU-E NB D100 G-TT PRO	-
911401522646	SM378B R P11 930 PSU-E NB D100 G-TT PRO	-
911401522746	SM378B R P11 940 PSU-E NB D100 G-TT PRO	-
911401522846	SM378B R P11 927 PSU-E MB D100 G-TT PRO	-
911401522946	SM378B R P11 930 PSU-E MB D100 G-TT PRO	-
911401523046	SM378B R P11 940 PSU-E MB D100 G-TT PRO	-
911401523146	SM378B R P11 927 PSU-E WB D100 G-TT PRO	-
911401523246	SM378B R P11 930 PSU-E WB D100 G-TT PRO	-
911401523346	SM378B R P11 940 PSU-E WB D100 G-TT PRO	-
911401523446	SM378B R P13 927 PSU-E NB D100 G-TT PRO	-
911401523546	SM378B R P13 930 PSU-E NB D100 G-TT PRO	-
911401523646	SM378B R P13 940 PSU-E NB D100 G-TT PRO	-
911401523746	SM378B R P13 927 PSU-E MB D100 G-TT PRO	-
911401523846	SM378B R P13 930 PSU-E MB D100 G-TT PRO	-
911401523946	SM378B R P13 940 PSU-E MB D100 G-TT PRO	-
911401524046	SM378B R P13 927 PSU-E WB D100 G-TT PRO	-
911401524146	SM378B R P13 930 PSU-E WB D100 G-TT PRO	-
911401524246	SM378B R P13 940 PSU-E WB D100 G-TT PRO	-
911401524346	SM378B R P20 927 PSU-E NB D100 G-TT PRO	-
911401524446	SM378B R P20 930 PSU-E NB D100 G-TT PRO	-

Order Code	Full Product Name	Dimmable
911401524546	SM378B R P20 940 PSU-E NB D100 G-TT PRO	-
911401524646	SM378B R P20 927 PSU-E MB D100 G-TT PRO	-
911401524746	SM378B R P20 930 PSU-E MB D100 G-TT PRO	-
911401524846	SM378B R P20 940 PSU-E MB D100 G-TT PRO	-
911401524946	SM378B R P20 927 PSU-E WB D100 G-TT PRO	-
911401525046	SM378B R P20 930 PSU-E WB D100 G-TT PRO	-
911401525146	SM378B R P20 940 PSU-E WB D100 G-TT PRO	-
911401525246	SM378B R P20 927 PSD-E NB D100 G-TT PRO	DALI
911401525346	SM378B R P20 930 PSD-E NB D100 G-TT PRO	DALI
911401525446	SM378B R P20 940 PSD-E NB D100 G-TT PRO	DALI
911401525546	SM378B R P20 927 PSD-E MB D100 G-TT PRO	DALI
911401525646	SM378B R P20 930 PSD-E MB D100 G-TT PRO	DALI
911401525746	SM378B R P20 940 PSD-E MB D100 G-TT PRO	DALI
911401525846	SM378B R P20 927 PSD-E WB D100 G-TT PRO	DALI
911401525946	SM378B R P20 930 PSD-E WB D100 G-TT PRO	DALI
911401526046	SM378B R P20 940 PSD-E WB D100 G-TT PRO	DALI
911401526146	SM378B R P8 927 PSD-E NB D100 G-TT PRO	DALI
911401526246	SM378B R P8 930 PSD-E NB D100 G-TT PRO	DALI
911401526346	SM378B R P8 940 PSD-E NB D100 G-TT PRO	DALI
911401526446	SM378B R P8 927 PSD-E MB D100 G-TT PRO	DALI
911401526546	SM378B R P8 930 PSD-E MB D100 G-TT PRO	DALI
911401526646	SM378B R P8 940 PSD-E MB D100 G-TT PRO	DALI
911401526746	SM378B R P8 927 PSD-E WB D100 G-TT PRO	DALI
911401526846	SM378B R P8 930 PSD-E WB D100 G-TT PRO	DALI
911401526946	SM378B R P8 940 PSD-E WB D100 G-TT PRO	DALI
911401527046	SM378B R P12 927 PSD-E NB D100 G-TT PRO	DALI
911401527146	SM378B R P12 930 PSD-E NB D100 G-TT PRO	DALI
911401527246	SM378B R P12 940 PSD-E NB D100 G-TT PRO	DALI
911401527346	SM378B R P12 927 PSD-E MB D100 G-TT PRO	DALI
911401527446	SM378B R P12 930 PSD-E MB D100 G-TT PRO	DALI
911401527546	SM378B R P12 940 PSD-E MB D100 G-TT PRO	DALI
911401527646	SM378B R P12 927 PSD-E WB D100 G-TT PRO	DALI
911401527746	SM378B R P12 930 PSD-E WB D100 G-TT PRO	DALI
911401527846	SM378B R P12 940 PSD-E WB D100 G-TT PRO	DALI
911401527946	SM378B R P14 927 PSD-E NB D100 G-TT PRO	DALI
911401528046	SM378B R P14 930 PSD-E NB D100 G-TT PRO	DALI
911401528146	SM378B R P14 940 PSD-E NB D100 G-TT PRO	DALI
911401528246	SM378B R P14 927 PSD-E MB D100 G-TT PRO	DALI
911401528346	SM378B R P14 930 PSD-E MB D100 G-TT PRO	DALI
911401528446	SM378B R P14 940 PSD-E MB D100 G-TT PRO	DALI
911401528546	SM378B R P14 927 PSD-E WB D100 G-TT PRO	DALI
911401528646	SM378B R P14 930 PSD-E WB D100 G-TT PRO	DALI

Order Code	Full Product Name	Dimmable
911401528746	SM378B R P14 940 PSD-E WB D100 G-TT PRO	DALI
911401528846	SM378X R P8 930 WIA MB D100 G-TT PRO	Wireless Dim
911401528946	SM378X R P8 930 WIA WB D100 G-TT PRO	Wireless Dim
911401529046	SM378X R P12 930 WIA MB D100 G-TT PRO	Wireless Dim
911401529146	SM378X R P12 930 WIA WB D100 G-TT PRO	Wireless Dim
911401529246	SM378X R P14 930 WIA MB D100 G-TT PRO	Wireless Dim
911401529346	SM378X R P14 930 WIA WB D100 G-TT PRO	Wireless Dim
911401529446	SM378X R P20 930 WIA MB D100 G-TT PRO	Wireless Dim
911401529546	SM378X R P20 930 WIA WB D100 G-TT PRO	Wireless Dim
911401529646	SM378B R P9 PSD-TNW NB D100 G-TT PRO	DALI
911401529746	SM378B R P9 PSD-TNW MB D100 G-TT PRO	DALI
911401529846	SM378B R P9 PSD-TNW WB D100 G-TT PRO	DALI
911401529946	SM378B R P12 PSD-TNW NB D100 G-TT PRO	DALI
911401530046	SM378B R P12 PSD-TNW MB D100 G-TT PRO	DALI
911401530146	SM378B R P12 PSD-TNW WB D100 G-TT PRO	DALI
911401530246	SM378B R P15 PSD-TNW NB D100 G-TT PRO	DALI
911401530346	SM378B R P15 PSD-TNW MB D100 G-TT PRO	DALI
911401530446	SM378B R P15 PSD-TNW WB D100 G-TT PRO	DALI
911401530546	SM378B R P22 PSD-TNW NB D100 G-TT PRO	DALI
911401530646	SM378B R P22 PSD-TNW MB D100 G-TT PRO	DALI
911401530746	SM378B R P22 PSD-TNW WB D100 G-TT PRO	DALI
911401581747	RS378B P9 930 PSD VWB D75 G-TT PROCAU	DALI
911401581847	RS378B P9 930 PSD VWB WP D75 G-TT PROCAU	DALI
911401582147	RS378B P9 930 PSD MB D75 G-TT PROCAU	DALI
911401582247	RS378B P9 930 PSD MB WP D75 G-TT PROCAU	DALI
911401500046	RS378B P7 930 PSD-E WB M43 PRO	DALI
911401500146	RS378B P7 940 PSD-E WB M43 PRO	DALI
911401500246	RS378B P6 930 PSU-E MB M43 WP PRO	-
911401500346	RS378B P6 930 PSU-E WB M43 WP PRO	-
911401500446	RS378B P8 930 PSU-E MB M43 WP PRO	-
911401500546	RS378B P8 930 PSU-E WB M43 WP PRO	-
911401520146	RS378B P7 PSD-TNW NB M43 PRO	DALI
911401520246	RS378B P7 PSD-TNW MB M43 PRO	DALI
911401520346	RS378B P7 PSD-TNW WB M43 PRO	DALI
911401596945	RS378B P6 927 PSU-E SNB M43 PRO	-
911401597045	RS378B P6 930 PSU-E SNB M43 PRO	-
911401597145	RS378B P6 940 PSU-E SNB M43 PRO	-
911401597245	RS378B P6 927 PSU-E NB M43 PRO	-
911401597345	RS378B P6 930 PSU-E NB M43 PRO	-
911401597445	RS378B P6 940 PSU-E NB M43 PRO	-
911401597545	RS378B P6 927 PSU-E MB M43 PRO	-
911401597645	RS378B P6 930 PSU-E MB M43 PRO	-

Order Code	Full Product Name	Dimmable
911401597745	RS378B P6 940 PSU-E MB M43 PRO	-
911401597845	RS378B P6 927 PSU-E WB M43 PRO	-
911401597945	RS378B P6 930 PSU-E WB M43 PRO	-
911401598045	RS378B P6 940 PSU-E WB M43 PRO	-
911401598145	RS378B P8 927 PSU-E NB M43 PRO	-
911401598245	RS378B P8 930 PSU-E NB M43 PRO	-
911401598345	RS378B P8 940 PSU-E NB M43 PRO	-
911401598445	RS378B P8 927 PSU-E MB M43 PRO	-
911401598545	RS378B P8 930 PSU-E MB M43 PRO	-
911401598645	RS378B P8 940 PSU-E MB M43 PRO	-
911401598745	RS378B P8 927 PSU-E WB M43 PRO	-
911401598845	RS378B P8 930 PSU-E WB M43 PRO	-
911401598945	RS378B P8 940 PSU-E WB M43 PRO	-
911401599045	RS378B P7 927 PSD-E SNB M43 PRO	DALI
911401599145	RS378B P7 930 PSD-E SNB M43 PRO	DALI
911401599245	RS378B P7 940 PSD-E SNB M43 PRO	DALI
911401599345	RS378B P7 927 PSD-E NB M43 PRO	DALI
911401599445	RS378B P7 930 PSD-E NB M43 PRO	DALI
911401599545	RS378B P7 940 PSD-E NB M43 PRO	DALI
911401599645	RS378B P7 927 PSD-E MB M43 PRO	DALI
911401599745	RS378B P7 930 PSD-E MB M43 PRO	DALI
911401599845	RS378B P7 940 PSD-E MB M43 PRO	DALI
911401599945	RS378B P7 927 PSD-E WB M43 PRO	DALI
911401582747	RS378B P12 930 PSD VWB WP D100M-WHPROCAU	DALI
911401582847	RS378B P12 930 PSD VWB D100 M-WH PROCAU	DALI
911401583147	RS378B P12 930 PSD MB WP D100M-WHPROCAU	DALI
911401583247	RS378B P12 930 PSD MB D100 M-WH PROCAU	DALI
911401500646	RS378B P7 927 PSU-E SNB M55 PRO	-
911401500746	RS378B P7 930 PSU-E SNB M55 PRO	-
911401500846	RS378B P7 940 PSU-E SNB M55 PRO	-
911401500946	RS378B P7 927 PSU-E NB M55 PRO	-
911401501046	RS378B P7 930 PSU-E NB M55 PRO	-
911401501146	RS378B P7 940 PSU-E NB M55 PRO	-
911401501246	RS378B P7 927 PSU-E MB M55 PRO	-
911401501346	RS378B P7 930 PSU-E MB M55 PRO	-
911401501446	RS378B P7 940 PSU-E MB M55 PRO	-
911401501546	RS378B P7 927 PSU-E WB M55 PRO	-
911401501646	RS378B P7 930 PSU-E WB M55 PRO	-
911401501746	RS378B P7 940 PSU-E WB M55 PRO	-
911401501846	RS378B P8 927 PSU-E SNB M55 PRO	-
911401501946	RS378B P8 930 PSU-E SNB M55 PRO	-
911401502046	RS378B P8 940 PSU-E SNB M55 PRO	-

Order Code	Full Product Name	Dimmable
911401502146	RS378B P9 927 PSU-E NB M55 PRO	-
911401502246	RS378B P9 930 PSU-E NB M55 PRO	-
911401502346	RS378B P9 940 PSU-E NB M55 PRO	-
911401502446	RS378B P9 927 PSU-E MB M55 PRO	-
911401502546	RS378B P9 930 PSU-E MB M55 PRO	-
911401502646	RS378B P9 940 PSU-E MB M55 PRO	-
911401502746	RS378B P9 927 PSU-E WB M55 PRO	-
911401502846	RS378B P9 930 PSU-E WB M55 PRO	-
911401502946	RS378B P9 940 PSU-E WB M55 PRO	-
911401504846	RS378B P7 927 PSD-E SNB M55 PRO	DALI
911401504946	RS378B P7 930 PSD-E SNB M55 PRO	DALI
911401505046	RS378B P7 940 PSD-E SNB M55 PRO	DALI
911401505146	RS378B P7 927 PSD-E NB M55 PRO	DALI
911401505246	RS378B P7 930 PSD-E NB M55 PRO	DALI
911401505346	RS378B P7 940 PSD-E NB M55 PRO	DALI
911401505446	RS378B P7 927 PSD-E MB M55 PRO	DALI
911401505546	RS378B P7 930 PSD-E MB M55 PRO	DALI
911401505646	RS378B P7 940 PSD-E MB M55 PRO	DALI
911401505746	RS378B P7 927 PSD-E WB M55 PRO	DALI
911401505846	RS378B P7 930 PSD-E WB M55 PRO	DALI
911401505946	RS378B P7 940 PSD-E WB M55 PRO	DALI
911401506046	RS378B P9 927 PSD-E NB M55 PRO	DALI
911401506146	RS378B P9 930 PSD-E NB M55 PRO	DALI
911401506246	RS378B P9 940 PSD-E NB M55 PRO	DALI
911401506346	RS378B P9 927 PSD-E MB M55 PRO	DALI
911401506446	RS378B P9 930 PSD-E MB M55 PRO	DALI
911401506546	RS378B P9 940 PSD-E MB M55 PRO	DALI
911401506646	RS378B P9 927 PSD-E WB M55 PRO	DALI
911401506746	RS378B P9 930 PSD-E WB M55 PRO	DALI
911401506846	RS378B P9 940 PSD-E WB M55 PRO	DALI
911401508746	RS378X P9 930 WIA MB M55 PRO	Wireless Dim
911401508846	RS378X P9 930 WIA WB M55 PRO	Wireless Dim
911401509346	RS378B P7 930 PSU-E MB M55 WP PRO	-
911401509446	RS378B P7 930 PSU-E WB M55 WP PRO	-
911401509546	RS378B P9 930 PSU-E MB M55 WP PRO	-
911401509646	RS378B P9 930 PSU-E WB M55 WP PRO	-
911401518946	RS378B P7 PSD-TNW NB M55 PRO	DALI
911401519046	RS378B P7 PSD-TNW MB M55 PRO	DALI
911401519146	RS378B P7 PSD-TNW WB M55 PRO	DALI
911401519246	RS378B P9 PSD-TNW NB M55 PRO	DALI
911401519346	RS378B P9 PSD-TNW MB M55 PRO	DALI
911401519446	RS378B P9 PSD-TNW WB M55 PRO	DALI

Order Code	Full Product Name	Dimmable
911401595145	RS378B P3 927 PSU-E MB D35 G-TT PRO	-
911401595245	RS378B P3 930 PSU-E MB D35 G-TT PRO	-
911401595345	RS378B P3 940 PSU-E MB D35 G-TT PRO	-
911401595445	RS378B P3 927 PSU-E WB D35 G-TT PRO	-
911401595545	RS378B P3 930 PSU-E WB D35 G-TT PRO	-
911401595645	RS378B P3 940 PSU-E WB D35 G-TT PRO	-
911401595745	RS378B P5 927 PSU-E MB D35 G-TT PRO	-
911401595845	RS378B P5 930 PSU-E MB D35 G-TT PRO	-
911401595945	RS378B P5 940 PSU-E MB D35 G-TT PRO	-
911401596045	RS378B P5 927 PSU-E WB D35 G-TT PRO	-
911401596145	RS378B P5 930 PSU-E WB D35 G-TT PRO	-
911401596245	RS378B P5 940 PSU-E WB D35 G-TT PRO	-
911401596345	RS378B P5 927 PSD-E MB D35 G-TT PRO	DALI
911401596445	RS378B P5 930 PSD-E MB D35 G-TT PRO	DALI
911401596545	RS378B P5 940 PSD-E MB D35 G-TT PRO	DALI
911401596645	RS378B P5 927 PSD-E WB D35 G-TT PRO	DALI
911401596745	RS378B P5 930 PSD-E WB D35 G-TT PRO	DALI
911401596845	RS378B P5 940 PSD-E WB D35 G-TT PRO	DALI
911401510146	RS378B P12 927 PSU-E NB M70 PRO	-
911401510246	RS378B P12 930 PSU-E NB M70 PRO	-
911401510346	RS378B P12 940 PSU-E NB M70 PRO	-
911401510446	RS378B P12 927 PSU-E MB M70 PRO	-
911401510546	RS378B P12 930 PSU-E MB M70 PRO	-
911401510646	RS378B P12 940 PSU-E MB M70 PRO	-
911401510746	RS378B P12 927 PSU-E WB M70 PRO	-
911401510846	RS378B P12 930 PSU-E WB M70 PRO	-
911401510946	RS378B P12 940 PSU-E WB M70 PRO	-
911401511046	RS378B P17 927 PSU-E NB M70 PRO	-
911401511146	RS378B P17 930 PSU-E NB M70 PRO	-
911401511246	RS378B P17 940 PSU-E NB M70 PRO	-
911401511346	RS378B P17 927 PSU-E MB M70 PRO	-
911401511446	RS378B P17 930 PSU-E MB M70 PRO	-
911401511546	RS378B P17 940 PSU-E MB M70 PRO	-
911401511646	RS378B P17 927 PSU-E WB M70 PRO	-
911401511746	RS378B P17 930 PSU-E WB M70 PRO	-
911401511846	RS378B P17 940 PSU-E WB M70 PRO	-
911401511946	RS378B P19 927 PSU-E NB M70 PRO	-
911401512046	RS378B P19 930 PSU-E NB M70 PRO	-
911401512146	RS378B P19 940 PSU-E NB M70 PRO	-
911401512246	RS378B P19 927 PSU-E MB M70 PRO	-
911401512346	RS378B P19 930 PSU-E MB M70 PRO	-
911401512446	RS378B P19 940 PSU-E MB M70 PRO	-

Order Code	Full Product Name	Dimmable
911401512546	RS378B P19 927 PSU-E WB M70 PRO	-
911401512646	RS378B P19 930 PSU-E WB M70 PRO	-
911401512746	RS378B P19 940 PSU-E WB M70 PRO	-
911401513746	RS378B P12 927 PSD-E NB M70 PRO	DALI
911401513846	RS378B P12 930 PSD-E NB M70 PRO	DALI
911401513946	RS378B P12 940 PSD-E NB M70 PRO	DALI
911401514046	RS378B P12 927 PSD-E MB M70 PRO	DALI
911401514146	RS378B P12 930 PSD-E MB M70 PRO	DALI
911401514246	RS378B P12 940 PSD-E MB M70 PRO	DALI
911401514346	RS378B P12 927 PSD-E WB M70 PRO	DALI
911401514446	RS378B P12 930 PSD-E WB M70 PRO	DALI
911401514546	RS378B P12 940 PSD-E WB M70 PRO	DALI
911401514646	RS378B P18 927 PSD-E NB M70 PRO	DALI
911401514746	RS378B P18 930 PSD-E NB M70 PRO	DALI
911401514846	RS378B P18 940 PSD-E NB M70 PRO	DALI
911401514946	RS378B P18 927 PSD-E MB M70 PRO	DALI
911401515046	RS378B P18 930 PSD-E MB M70 PRO	DALI
911401515146	RS378B P18 940 PSD-E MB M70 PRO	DALI
911401515246	RS378B P18 927 PSD-E WB M70 PRO	DALI
911401515346	RS378B P18 930 PSD-E WB M70 PRO	DALI
911401515446	RS378B P18 940 PSD-E WB M70 PRO	DALI
911401515546	RS378B P20 927 PSD-E NB M70 PRO	DALI
911401515646	RS378B P20 930 PSD-E NB M70 PRO	DALI
911401515746	RS378B P20 940 PSD-E NB M70 PRO	DALI
911401515846	RS378B P20 927 PSD-E MB M70 PRO	DALI
911401515946	RS378B P20 930 PSD-E MB M70 PRO	DALI
911401516046	RS378B P20 940 PSD-E MB M70 PRO	DALI
911401516146	RS378B P20 927 PSD-E WB M70 PRO	DALI
911401516246	RS378B P20 930 PSD-E WB M70 PRO	DALI
911401516346	RS378B P20 940 PSD-E WB M70 PRO	DALI
911401517346	RS378X P12 930 WIA MB M70 PRO	Wireless Dim
911401517446	RS378X P12 930 WIA WB M70 PRO	Wireless Dim
911401517546	RS378X P19 930 WIA MB M70 PRO	Wireless Dim
911401517646	RS378X P19 930 WIA WB M70 PRO	Wireless Dim
911401517746	RS378X P18 930 WIA MB M70 PRO	Wireless Dim
911401517846	RS378X P18 930 WIA WB M70 PRO	Wireless Dim
911401518146	RS378B P12 930 PSU-E MB M70 WP PRO	-
911401518246	RS378B P12 930 PSU-E WB M70 WP PRO	-
911401518346	RS378B P17 930 PSU-E MB M70 WP PRO	-
911401518446	RS378B P17 930 PSU-E WB M70 WP PRO	-
911401518546	RS378B P19 930 PSU-E MB M70 WP PRO	-
911401518646	RS378B P19 930 PSU-E WB M70 WP PRO	-

Order Code	Full Product Name	Dimmable
911401520446	RS378B P13 PSD-TNW NB M70 PRO	DALI
911401520546	RS378B P13 PSD-TNW MB M70 PRO	DALI
911401520646	RS378B P13 PSD-TNW WB M70 PRO	DALI
911401520746	RS378B P19 PSD-TNW NB M70 PRO	DALI
911401520846	RS378B P19 PSD-TNW MB M70 PRO	DALI
911401520946	RS378B P19 PSD-TNW WB M70 PRO	DALI
911401521046	RS378B P22 PSD-TNW NB M70 PRO	DALI
911401521146	RS378B P22 PSD-TNW MB M70 PRO	DALI
911401521246	RS378B P22 PSD-TNW WB M70 PRO	DALI
911401512846	RS378B P27 927 PSU-E NB M70 PRO	-
911401512946	RS378B P27 930 PSU-E NB M70 PRO	-
911401513046	RS378B P27 940 PSU-E NB M70 PRO	-
911401513146	RS378B P27 927 PSU-E MB M70 PRO	-
911401513246	RS378B P27 930 PSU-E MB M70 PRO	-
911401513346	RS378B P27 940 PSU-E MB M70 PRO	-
911401513446	RS378B P27 927 PSU-E WB M70 PRO	-
911401513546	RS378B P27 930 PSU-E WB M70 PRO	-
911401513646	RS378B P27 940 PSU-E WB M70 PRO	-
911401516446	RS378B P27 927 PSD-E NB M70 PRO	DALI
911401516546	RS378B P27 930 PSD-E NB M70 PRO	DALI
911401516646	RS378B P27 940 PSD-E NB M70 PRO	DALI
911401516746	RS378B P27 927 PSD-E MB M70 PRO	DALI
911401516846	RS378B P27 930 PSD-E MB M70 PRO	DALI
911401516946	RS378B P27 940 PSD-E MB M70 PRO	DALI
911401517046	RS378B P27 927 PSD-E WB M70 PRO	DALI
911401517146	RS378B P27 930 PSD-E WB M70 PRO	DALI
911401517246	RS378B P27 940 PSD-E WB M70 PRO	DALI
911401517946	RS378X P28 930 WIA MB M70 PRO	Wireless Dim
911401518046	RS378X P28 930 WIA WB M70 PRO	Wireless Dim
911401518746	RS378B P27 930 PSU-E MB M70 WP PRO	-
911401518846	RS378B P27 930 PSU-E WB M70 WP PRO	-
911401521346	RS378B P29 PSD-TNW NB M70 PRO	DALI
911401521446	RS378B P29 PSD-TNW MB M70 PRO	DALI
911401521546	RS378B P29 PSD-TNW WB M70 PRO	DALI
911401580947	RS378B P7 930 PSD VWB D55 G-TT PROCAU	DALI
911401581047	RS378B P7 930 PSD VWB WP D55 G-TT PROCAU	DALI
911401581347	RS378B P7 930 PSD MB D55 G-TT PROCAU	DALI
911401581447	RS378B P7 930 PSD MB WP D55 G-TT PROCAU	DALI
911401530846	SM378B S P8 927 PSU-E NB D100 G-TT PRO	-
911401530946	SM378B S P8 930 PSU-E NB D100 G-TT PRO	-
911401531046	SM378B S P8 940 PSU-E NB D100 G-TT PRO	-
911401531146	SM378B S P8 927 PSU-E MB D100 G-TT PRO	-

Order Code	Full Product Name	Dimmable
911401531246	SM378B S P8 930 PSU-E MB D100 G-TT PRO	-
911401531346	SM378B S P8 940 PSU-E MB D100 G-TT PRO	-
911401531446	SM378B S P8 927 PSU-E WB D100 G-TT PRO	-
911401531546	SM378B S P8 930 PSU-E WB D100 G-TT PRO	-
911401531646	SM378B S P8 940 PSU-E WB D100 G-TT PRO	-
911401531746	SM378B S P11 927 PSU-E NB D100 G-TT PRO	-
911401531846	SM378B S P11 930 PSU-E NB D100 G-TT PRO	-
911401531946	SM378B S P11 940 PSU-E NB D100 G-TT PRO	-
911401532046	SM378B S P11 927 PSU-E MB D100 G-TT PRO	-
911401532146	SM378B S P11 930 PSU-E MB D100 G-TT PRO	-
911401532246	SM378B S P11 940 PSU-E MB D100 G-TT PRO	-
911401532346	SM378B S P11 927 PSU-E WB D100 G-TT PRO	-
911401532446	SM378B S P11 930 PSU-E WB D100 G-TT PRO	-
911401532546	SM378B S P11 940 PSU-E WB D100 G-TT PRO	-
911401532646	SM378B S P13 927 PSU-E NB D100 G-TT PRO	-
911401532746	SM378B S P13 930 PSU-E NB D100 G-TT PRO	-
911401532846	SM378B S P13 940 PSU-E NB D100 G-TT PRO	-
911401532946	SM378B S P13 927 PSU-E MB D100 G-TT PRO	-
911401533046	SM378B S P13 930 PSU-E MB D100 G-TT PRO	-
911401533146	SM378B S P13 940 PSU-E MB D100 G-TT PRO	-
911401533246	SM378B S P13 927 PSU-E WB D100 G-TT PRO	-
911401533346	SM378B S P13 930 PSU-E WB D100 G-TT PRO	-
911401533446	SM378B S P13 940 PSU-E WB D100 G-TT PRO	-
911401533546	SM378B S P20 927 PSU-E NB D100 G-TT PRO	-
911401533646	SM378B S P20 930 PSU-E NB D100 G-TT PRO	-
911401533746	SM378B S P20 940 PSU-E NB D100 G-TT PRO	-
911401533846	SM378B S P20 927 PSU-E MB D100 G-TT PRO	-
911401533946	SM378B S P20 930 PSU-E MB D100 G-TT PRO	-
911401534046	SM378B S P20 940 PSU-E MB D100 G-TT PRO	-
911401534146	SM378B S P20 927 PSU-E WB D100 G-TT PRO	-
911401534246	SM378B S P20 930 PSU-E WB D100 G-TT PRO	-
911401534346	SM378B S P20 940 PSU-E WB D100 G-TT PRO	-
911401534446	SM378B S P20 927 PSD-E NB D100 G-TT PRO	DALI
911401534546	SM378B S P20 930 PSD-E NB D100 G-TT PRO	DALI
911401534646	SM378B S P20 940 PSD-E NB D100 G-TT PRO	DALI
911401534746	SM378B S P20 927 PSD-E MB D100 G-TT PRO	DALI
911401534846	SM378B S P20 930 PSD-E MB D100 G-TT PRO	DALI
911401534946	SM378B S P20 940 PSD-E MB D100 G-TT PRO	DALI
911401535046	SM378B S P20 927 PSD-E WB D100 G-TT PRO	DALI
911401535146	SM378B S P20 930 PSD-E WB D100 G-TT PRO	DALI
911401535246	SM378B S P20 940 PSD-E WB D100 G-TT PRO	DALI
911401535446	SM378B S P8 927 PSD-E NB D100 G-TT PRO	DALI

Order Code	Full Product Name	Dimmable
911401535546	SM378B S P8 930 PSD-E NB D100 G-TT PRO	DALI
911401535646	SM378B S P8 940 PSD-E NB D100 G-TT PRO	DALI
911401535746	SM378B S P8 927 PSD-E MB D100 G-TT PRO	DALI
911401535846	SM378B S P8 930 PSD-E MB D100 G-TT PRO	DALI
911401535946	SM378B S P8 940 PSD-E MB D100 G-TT PRO	DALI
911401536046	SM378B S P8 927 PSD-E WB D100 G-TT PRO	DALI
911401536146	SM378B S P8 930 PSD-E WB D100 G-TT PRO	DALI
911401536246	SM378B S P8 940 PSD-E WB D100 G-TT PRO	DALI
911401536346	SM378B S P12 927 PSD-E NB D100 G-TT PRO	DALI
911401536446	SM378B S P12 930 PSD-E NB D100 G-TT PRO	DALI
911401536546	SM378B S P12 940 PSD-E NB D100 G-TT PRO	DALI
911401536646	SM378B S P12 927 PSD-E MB D100 G-TT PRO	DALI
911401536746	SM378B S P12 930 PSD-E MB D100 G-TT PRO	DALI
911401536846	SM378B S P12 940 PSD-E MB D100 G-TT PRO	DALI
911401536946	SM378B S P12 927 PSD-E WB D100 G-TT PRO	DALI
911401537046	SM378B S P12 930 PSD-E WB D100 G-TT PRO	DALI
911401537146	SM378B S P12 940 PSD-E WB D100 G-TT PRO	DALI
911401537246	SM378B S P14 927 PSD-E NB D100 G-TT PRO	DALI
911401537346	SM378B S P14 930 PSD-E NB D100 G-TT PRO	DALI
911401537446	SM378B S P14 940 PSD-E NB D100 G-TT PRO	DALI
911401537546	SM378B S P14 927 PSD-E MB D100 G-TT PRO	DALI
911401537646	SM378B S P14 930 PSD-E MB D100 G-TT PRO	DALI
911401537746	SM378B S P14 940 PSD-E MB D100 G-TT PRO	DALI
911401537846	SM378B S P14 927 PSD-E WB D100 G-TT PRO	DALI
911401537946	SM378B S P14 930 PSD-E WB D100 G-TT PRO	DALI
911401538046	SM378B S P14 940 PSD-E WB D100 G-TT PRO	DALI
911401538146	SM378X S P8 930 WIA MB D100 G-TT PRO	Wireless Dim
911401538246	SM378X S P8 930 WIA WB D100 G-TT PRO	Wireless Dim
911401538346	SM378X S P12 930 WIA MB D100 G-TT PRO	Wireless Dim
911401538446	SM378X S P12 930 WIA WB D100 G-TT PRO	Wireless Dim
911401538546	SM378X S P14 930 WIA MB D100 G-TT PRO	Wireless Dim
911401538646	SM378X S P14 930 WIA WB D100 G-TT PRO	Wireless Dim
911401538746	SM378X S P20 930 WIA MB D100 G-TT PRO	Wireless Dim
911401538846	SM378X S P20 930 WIA WB D100 G-TT PRO	Wireless Dim
911401538946	SM378B S P9 PSD-TNW NB D100 G-TT PRO	DALI
911401539046	SM378B S P9 PSD-TNW MB D100 G-TT PRO	DALI
911401539146	SM378B S P9 PSD-TNW WB D100 G-TT PRO	DALI
911401539246	SM378B S P12 PSD-TNW NB D100 G-TT PRO	DALI
911401539346	SM378B S P12 PSD-TNW MB D100 G-TT PRO	DALI
911401539446	SM378B S P12 PSD-TNW WB D100 G-TT PRO	DALI
911401539546	SM378B S P15 PSD-TNW NB D100 G-TT PRO	DALI
911401539646	SM378B S P15 PSD-TNW MB D100 G-TT PRO	DALI

Order Code	Full Product Name	Dimmable
911401539746	SM378B S P15 PSD-TNW WB D100 G-TT PRO	DALI
911401539846	SM378B S P22 PSD-TNW NB D100 G-TT PRO	DALI
911401539946	SM378B S P22 PSD-TNW MB D100 G-TT PRO	DALI
911401540046	SM378B S P22 PSD-TNW WB D100 G-TT PRO	DALI
911401581147	RS378B P7 930 PSD VWB WP D55 M-WH PROCAU	DALI
911401581247	RS378B P7 930 PSD VWB D55 M-WH PROCAU	DALI
911401581547	RS378B P7 930 PSD MB WP D55 M-WH PROCAU	DALI
911401581647	RS378B P7 930 PSD MB D55 M-WH PROCAU	DALI
911401582547	RS378B P12 930 PSD VWB D100 G-TT PROCAU	DALI
911401582647	RS378B P12 930 PSD VWB WP D100G-TTPROCAU	DALI
911401582947	RS378B P12 930 PSD MB D100 G-TT PROCAU	DALI
911401583047	RS378B P12 930 PSD MB WP D100G-TTPROCAU	DALI
911401503046	RS378B P12 927 PSU-E NB M55 PRO	-
911401503146	RS378B P12 930 PSU-E NB M55 PRO	-
911401503246	RS378B P12 940 PSU-E NB M55 PRO	-
911401503346	RS378B P12 927 PSU-E MB M55 PRO	-
911401503446	RS378B P12 930 PSU-E MB M55 PRO	-
911401503546	RS378B P12 940 PSU-E MB M55 PRO	-
911401503646	RS378B P12 927 PSU-E WB M55 PRO	-
911401503746	RS378B P12 930 PSU-E WB M55 PRO	-
911401503846	RS378B P12 940 PSU-E WB M55 PRO	-
911401503946	RS378B P14 927 PSU-E NB M55 PRO	-
911401504046	RS378B P14 930 PSU-E NB M55 PRO	-
911401504146	RS378B P14 940 PSU-E NB M55 PRO	-
911401504246	RS378B P14 927 PSU-E MB M55 PRO	-
911401504346	RS378B P14 930 PSU-E MB M55 PRO	-
911401504446	RS378B P14 940 PSU-E MB M55 PRO	-
911401504546	RS378B P14 927 PSU-E WB M55 PRO	-
911401504646	RS378B P14 930 PSU-E WB M55 PRO	-
911401504746	RS378B P14 940 PSU-E WB M55 PRO	-
911401506946	RS378B P13 927 PSD-E NB M55 PRO	DALI
911401507046	RS378B P13 930 PSD-E NB M55 PRO	DALI
911401507146	RS378B P13 940 PSD-E NB M55 PRO	DALI
911401507246	RS378B P13 927 PSD-E MB M55 PRO	DALI
911401507346	RS378B P13 930 PSD-E MB M55 PRO	DALI
911401507446	RS378B P13 940 PSD-E MB M55 PRO	DALI
911401507546	RS378B P13 927 PSD-E WB M55 PRO	DALI
911401507646	RS378B P13 930 PSD-E WB M55 PRO	DALI
911401507746	RS378B P13 940 PSD-E WB M55 PRO	DALI
911401507846	RS378B P15 927 PSD-E NB M55 PRO	DALI
911401507946	RS378B P15 930 PSD-E NB M55 PRO	DALI
911401508046	RS378B P15 940 PSD-E NB M55 PRO	DALI

Order Code	Full Product Name	Dimmable
911401508146	RS378B P15 927 PSD-E MB M55 PRO	DALI
911401508246	RS378B P15 930 PSD-E MB M55 PRO	DALI
911401508346	RS378B P15 940 PSD-E MB M55 PRO	DALI
911401508446	RS378B P15 927 PSD-E WB M55 PRO	DALI
911401508546	RS378B P15 930 PSD-E WB M55 PRO	DALI
911401508646	RS378B P15 940 PSD-E WB M55 PRO	DALI
911401508946	RS378X P12 930 WIA MB M55 PRO	Wireless Dim
911401509046	RS378X P12 930 WIA WB M55 PRO	Wireless Dim
911401509146	RS378X P14 930 WIA MB M55 PRO	Wireless Dim
911401509246	RS378X P14 930 WIA WB M55 PRO	Wireless Dim
911401509746	RS378B P12 930 PSU-E MB M55 WP PRO	-
911401509846	RS378B P12 930 PSU-E WB M55 WP PRO	-
911401509946	RS378B P14 930 PSU-E MB M55 WP PRO	-
911401510046	RS378B P14 930 PSU-E WB M55 WP PRO	-
911401519546	RS378B P13 PSD-TNW NB M55 PRO	DALI
911401519646	RS378B P13 PSD-TNW MB M55 PRO	DALI
911401519746	RS378B P13 PSD-TNW WB M55 PRO	DALI
911401519846	RS378B P15 PSD-TNW NB M55 PRO	DALI
911401519946	RS378B P15 PSD-TNW MB M55 PRO	DALI
911401520046	RS378B P15 PSD-TNW WB M55 PRO	DALI
911401581947	RS378B P9 930 PSD VWB WP D75 M-WH PROCAU	DALI
911401582047	RS378B P9 930 PSD VWB D75 M-WH PROCAU	DALI
911401582347	RS378B P9 930 PSD MB WP D75 M-WH PROCAU	DALI
911401582447	RS378B P9 930 PSD MB D75 M-WH PROCAU	DALI

Mechanical and Housing

Order Code	Full Product Name	Housing Color	Ingress protection code
911401521646	SM378B R P8 927 PSU-E NB D100 G-TT PRO	White	IP20
911401521746	SM378B R P8 930 PSU-E NB D100 G-TT PRO	White	IP20
911401521846	SM378B R P8 940 PSU-E NB D100 G-TT PRO	White	IP20
911401521946	SM378B R P8 927 PSU-E MB D100 G-TT PRO	White	IP20
911401522046	SM378B R P8 930 PSU-E MB D100 G-TT PRO	White	IP20
911401522146	SM378B R P8 940 PSU-E MB D100 G-TT PRO	White	IP20
911401522246	SM378B R P8 927 PSU-E WB D100 G-TT PRO	White	IP20
911401522346	SM378B R P8 930 PSU-E WB D100 G-TT PRO	White	IP20
911401522446	SM378B R P8 940 PSU-E WB D100 G-TT PRO	White	IP20
911401522546	SM378B R P11 927 PSU-E NB D100 G-TT PRO	White	IP20
911401522646	SM378B R P11 930 PSU-E NB D100 G-TT PRO	White	IP20
911401522746	SM378B R P11 940 PSU-E NB D100 G-TT PRO	White	IP20
911401522846	SM378B R P11 927 PSU-E MB D100 G-TT PRO	White	IP20
911401522946	SM378B R P11 930 PSU-E MB D100 G-TT PRO	White	IP20
911401523046	SM378B R P11 940 PSU-E MB D100 G-TT PRO	White	IP20

Order Code	Full Product Name	Housing Color	Ingress protection code
911401523146	SM378B R P11 927 PSU-E WB D100 G-TT PRO	White	IP20
911401523246	SM378B R P11 930 PSU-E WB D100 G-TT PRO	White	IP20
911401523346	SM378B R P11 940 PSU-E WB D100 G-TT PRO	White	IP20
911401523446	SM378B R P13 927 PSU-E NB D100 G-TT PRO	White	IP20
911401523546	SM378B R P13 930 PSU-E NB D100 G-TT PRO	White	IP20
911401523646	SM378B R P13 940 PSU-E NB D100 G-TT PRO	White	IP20
911401523746	SM378B R P13 927 PSU-E MB D100 G-TT PRO	White	IP20
911401523846	SM378B R P13 930 PSU-E MB D100 G-TT PRO	White	IP20
911401523946	SM378B R P13 940 PSU-E MB D100 G-TT PRO	White	IP20
911401524046	SM378B R P13 927 PSU-E WB D100 G-TT PRO	White	IP20
911401524146	SM378B R P13 930 PSU-E WB D100 G-TT PRO	White	IP20
911401524246	SM378B R P13 940 PSU-E WB D100 G-TT PRO	White	IP20
911401524346	SM378B R P20 927 PSU-E NB D100 G-TT PRO	White	IP20
911401524446	SM378B R P20 930 PSU-E NB D100 G-TT PRO	White	IP20
911401524546	SM378B R P20 940 PSU-E NB D100 G-TT PRO	White	IP20
911401524646	SM378B R P20 927 PSU-E MB D100 G-TT PRO	White	IP20
911401524746	SM378B R P20 930 PSU-E MB D100 G-TT PRO	White	IP20
911401524846	SM378B R P20 940 PSU-E MB D100 G-TT PRO	White	IP20
911401524946	SM378B R P20 927 PSU-E WB D100 G-TT PRO	White	IP20
911401525046	SM378B R P20 930 PSU-E WB D100 G-TT PRO	White	IP20
911401525146	SM378B R P20 940 PSU-E WB D100 G-TT PRO	White	IP20
911401525246	SM378B R P20 927 PSD-E NB D100 G-TT PRO	White	IP20
911401525346	SM378B R P20 930 PSD-E NB D100 G-TT PRO	White	IP20
911401525446	SM378B R P20 940 PSD-E NB D100 G-TT PRO	White	IP20
911401525546	SM378B R P20 927 PSD-E MB D100 G-TT PRO	White	IP20
911401525646	SM378B R P20 930 PSD-E MB D100 G-TT PRO	White	IP20
911401525746	SM378B R P20 940 PSD-E MB D100 G-TT PRO	White	IP20
911401525846	SM378B R P20 927 PSD-E WB D100 G-TT PRO	White	IP20
911401525946	SM378B R P20 930 PSD-E WB D100 G-TT PRO	White	IP20
911401526046	SM378B R P20 940 PSD-E WB D100 G-TT PRO	White	IP20
911401526146	SM378B R P8 927 PSD-E NB D100 G-TT PRO	White	IP20
911401526246	SM378B R P8 930 PSD-E NB D100 G-TT PRO	White	IP20
911401526346	SM378B R P8 940 PSD-E NB D100 G-TT PRO	White	IP20
911401526446	SM378B R P8 927 PSD-E MB D100 G-TT PRO	White	IP20
911401526546	SM378B R P8 930 PSD-E MB D100 G-TT PRO	White	IP20
911401526646	SM378B R P8 940 PSD-E MB D100 G-TT PRO	White	IP20
911401526746	SM378B R P8 927 PSD-E WB D100 G-TT PRO	White	IP20
911401526846	SM378B R P8 930 PSD-E WB D100 G-TT PRO	White	IP20
911401526946	SM378B R P8 940 PSD-E WB D100 G-TT PRO	White	IP20
911401527046	SM378B R P12 927 PSD-E NB D100 G-TT PRO	White	IP20
911401527146	SM378B R P12 930 PSD-E NB D100 G-TT PRO	White	IP20
911401527246	SM378B R P12 940 PSD-E NB D100 G-TT PRO	White	IP20

Order Code	Full Product Name	Housing Color	Ingress protection code
911401527346	SM378B R P12 927 PSD-E MB D100 G-TT PRO	White	IP20
911401527446	SM378B R P12 930 PSD-E MB D100 G-TT PRO	White	IP20
911401527546	SM378B R P12 940 PSD-E MB D100 G-TT PRO	White	IP20
911401527646	SM378B R P12 927 PSD-E WB D100 G-TT PRO	White	IP20
911401527746	SM378B R P12 930 PSD-E WB D100 G-TT PRO	White	IP20
911401527846	SM378B R P12 940 PSD-E WB D100 G-TT PRO	White	IP20
911401527946	SM378B R P14 927 PSD-E NB D100 G-TT PRO	White	IP20
911401528046	SM378B R P14 930 PSD-E NB D100 G-TT PRO	White	IP20
911401528146	SM378B R P14 940 PSD-E NB D100 G-TT PRO	White	IP20
911401528246	SM378B R P14 927 PSD-E MB D100 G-TT PRO	White	IP20
911401528346	SM378B R P14 930 PSD-E MB D100 G-TT PRO	White	IP20
911401528446	SM378B R P14 940 PSD-E MB D100 G-TT PRO	White	IP20
911401528546	SM378B R P14 927 PSD-E WB D100 G-TT PRO	White	IP20
911401528646	SM378B R P14 930 PSD-E WB D100 G-TT PRO	White	IP20
911401528746	SM378B R P14 940 PSD-E WB D100 G-TT PRO	White	IP20
911401528846	SM378X R P8 930 WIA MB D100 G-TT PRO	White	IP20
911401528946	SM378X R P8 930 WIA WB D100 G-TT PRO	White	IP20
911401529046	SM378X R P12 930 WIA MB D100 G-TT PRO	White	IP20
911401529146	SM378X R P12 930 WIA WB D100 G-TT PRO	White	IP20
911401529246	SM378X R P14 930 WIA MB D100 G-TT PRO	White	IP20
911401529346	SM378X R P14 930 WIA WB D100 G-TT PRO	White	IP20
911401529446	SM378X R P20 930 WIA MB D100 G-TT PRO	White	IP20
911401529546	SM378X R P20 930 WIA WB D100 G-TT PRO	White	IP20
911401529646	SM378B R P9 PSD-TNW NB D100 G-TT PRO	White	IP20
911401529746	SM378B R P9 PSD-TNW MB D100 G-TT PRO	White	IP20
911401529846	SM378B R P9 PSD-TNW WB D100 G-TT PRO	White	IP20
911401529946	SM378B R P12 PSD-TNW NB D100 G-TT PRO	White	IP20
911401530046	SM378B R P12 PSD-TNW MB D100 G-TT PRO	White	IP20
911401530146	SM378B R P12 PSD-TNW WB D100 G-TT PRO	White	IP20
911401530246	SM378B R P15 PSD-TNW NB D100 G-TT PRO	White	IP20
911401530346	SM378B R P15 PSD-TNW MB D100 G-TT PRO	White	IP20
911401530446	SM378B R P15 PSD-TNW WB D100 G-TT PRO	White	IP20
911401530546	SM378B R P22 PSD-TNW NB D100 G-TT PRO	White	IP20
911401530646	SM378B R P22 PSD-TNW MB D100 G-TT PRO	White	IP20
911401530746	SM378B R P22 PSD-TNW WB D100 G-TT PRO	White	IP20
911401581747	RS378B P9 930 PSD VWB D75 G-TT PROCAU	Black	IP20
911401581847	RS378B P9 930 PSD VWB WP D75 G-TT PROCAU	Black	IP20/54
911401582147	RS378B P9 930 PSD MB D75 G-TT PROCAU	Black	IP20
911401582247	RS378B P9 930 PSD MB WP D75 G-TT PROCAU	Black	IP20/54
911401500046	RS378B P7 930 PSD-E WB M43 PRO	Black	IP20
911401500146	RS378B P7 940 PSD-E WB M43 PRO	Black	IP20
911401500246	RS378B P6 930 PSU-E MB M43 WP PRO	Black	IP20/54

Order Code	Full Product Name	Housing Color	Ingress protection code
911401500346	RS378B P6 930 PSU-E WB M43 WP PRO	Black	IP20/54
911401500446	RS378B P8 930 PSU-E MB M43 WP PRO	Black	IP20/54
911401500546	RS378B P8 930 PSU-E WB M43 WP PRO	Black	IP20/54
911401520146	RS378B P7 PSD-TNW NB M43 PRO	Black	IP20
911401520246	RS378B P7 PSD-TNW MB M43 PRO	Black	IP20
911401520346	RS378B P7 PSD-TNW WB M43 PRO	Black	IP20
911401596945	RS378B P6 927 PSU-E SNB M43 PRO	Black	IP20
911401597045	RS378B P6 930 PSU-E SNB M43 PRO	Black	IP20
911401597145	RS378B P6 940 PSU-E SNB M43 PRO	Black	IP20
911401597245	RS378B P6 927 PSU-E NB M43 PRO	Black	IP20
911401597345	RS378B P6 930 PSU-E NB M43 PRO	Black	IP20
911401597445	RS378B P6 940 PSU-E NB M43 PRO	Black	IP20
911401597545	RS378B P6 927 PSU-E MB M43 PRO	Black	IP20
911401597645	RS378B P6 930 PSU-E MB M43 PRO	Black	IP20
911401597745	RS378B P6 940 PSU-E MB M43 PRO	Black	IP20
911401597845	RS378B P6 927 PSU-E WB M43 PRO	Black	IP20
911401597945	RS378B P6 930 PSU-E WB M43 PRO	Black	IP20
911401598045	RS378B P6 940 PSU-E WB M43 PRO	Black	IP20
911401598145	RS378B P8 927 PSU-E NB M43 PRO	Black	IP20
911401598245	RS378B P8 930 PSU-E NB M43 PRO	Black	IP20
911401598345	RS378B P8 940 PSU-E NB M43 PRO	Black	IP20
911401598445	RS378B P8 927 PSU-E MB M43 PRO	Black	IP20
911401598545	RS378B P8 930 PSU-E MB M43 PRO	Black	IP20
911401598645	RS378B P8 940 PSU-E MB M43 PRO	Black	IP20
911401598745	RS378B P8 927 PSU-E WB M43 PRO	Black	IP20
911401598845	RS378B P8 930 PSU-E WB M43 PRO	Black	IP20
911401598945	RS378B P8 940 PSU-E WB M43 PRO	Black	IP20
911401599045	RS378B P7 927 PSD-E SNB M43 PRO	Black	IP20
911401599145	RS378B P7 930 PSD-E SNB M43 PRO	Black	IP20
911401599245	RS378B P7 940 PSD-E SNB M43 PRO	Black	IP20
911401599345	RS378B P7 927 PSD-E NB M43 PRO	Black	IP20
911401599445	RS378B P7 930 PSD-E NB M43 PRO	Black	IP20
911401599545	RS378B P7 940 PSD-E NB M43 PRO	Black	IP20
911401599645	RS378B P7 927 PSD-E MB M43 PRO	Black	IP20
911401599745	RS378B P7 930 PSD-E MB M43 PRO	Black	IP20
911401599845	RS378B P7 940 PSD-E MB M43 PRO	Black	IP20
911401599945	RS378B P7 927 PSD-E WB M43 PRO	Black	IP20
911401582747	RS378B P12 930 PSD VWB WP D100M-WHPROCAU	Black	IP20/54
911401582847	RS378B P12 930 PSD VWB D100 M-WH PROCAU	Black	IP20
911401583147	RS378B P12 930 PSD MB WP D100M-WHPROCAU	Black	IP20/54
911401583247	RS378B P12 930 PSD MB D100 M-WH PROCAU	Black	IP20
911401500646	RS378B P7 927 PSU-E SNB M55 PRO	Black	IP20

Order Code	Full Product Name	Housing Color	Ingress protection code
911401500746	RS378B P7 930 PSU-E SNB M55 PRO	Black	IP20
911401500846	RS378B P7 940 PSU-E SNB M55 PRO	Black	IP20
911401500946	RS378B P7 927 PSU-E NB M55 PRO	Black	IP20
911401501046	RS378B P7 930 PSU-E NB M55 PRO	Black	IP20
911401501146	RS378B P7 940 PSU-E NB M55 PRO	Black	IP20
911401501246	RS378B P7 927 PSU-E MB M55 PRO	Black	IP20
911401501346	RS378B P7 930 PSU-E MB M55 PRO	Black	IP20
911401501446	RS378B P7 940 PSU-E MB M55 PRO	Black	IP20
911401501546	RS378B P7 927 PSU-E WB M55 PRO	Black	IP20
911401501646	RS378B P7 930 PSU-E WB M55 PRO	Black	IP20
911401501746	RS378B P7 940 PSU-E WB M55 PRO	Black	IP20
911401501846	RS378B P8 927 PSU-E SNB M55 PRO	Black	IP20
911401501946	RS378B P8 930 PSU-E SNB M55 PRO	Black	IP20
911401502046	RS378B P8 940 PSU-E SNB M55 PRO	Black	IP20
911401502146	RS378B P9 927 PSU-E NB M55 PRO	Black	IP20
911401502246	RS378B P9 930 PSU-E NB M55 PRO	Black	IP20
911401502346	RS378B P9 940 PSU-E NB M55 PRO	Black	IP20
911401502446	RS378B P9 927 PSU-E MB M55 PRO	Black	IP20
911401502546	RS378B P9 930 PSU-E MB M55 PRO	Black	IP20
911401502646	RS378B P9 940 PSU-E MB M55 PRO	Black	IP20
911401502746	RS378B P9 927 PSU-E WB M55 PRO	Black	IP20
911401502846	RS378B P9 930 PSU-E WB M55 PRO	Black	IP20
911401502946	RS378B P9 940 PSU-E WB M55 PRO	Black	IP20
911401504846	RS378B P7 927 PSD-E SNB M55 PRO	Black	IP20
911401504946	RS378B P7 930 PSD-E SNB M55 PRO	Black	IP20
911401505046	RS378B P7 940 PSD-E SNB M55 PRO	Black	IP20
911401505146	RS378B P7 927 PSD-E NB M55 PRO	Black	IP20
911401505246	RS378B P7 930 PSD-E NB M55 PRO	Black	IP20
911401505346	RS378B P7 940 PSD-E NB M55 PRO	Black	IP20
911401505446	RS378B P7 927 PSD-E MB M55 PRO	Black	IP20
911401505546	RS378B P7 930 PSD-E MB M55 PRO	Black	IP20
911401505646	RS378B P7 940 PSD-E MB M55 PRO	Black	IP20
911401505746	RS378B P7 927 PSD-E WB M55 PRO	Black	IP20
911401505846	RS378B P7 930 PSD-E WB M55 PRO	Black	IP20
911401505946	RS378B P7 940 PSD-E WB M55 PRO	Black	IP20
911401506046	RS378B P9 927 PSD-E NB M55 PRO	Black	IP20
911401506146	RS378B P9 930 PSD-E NB M55 PRO	Black	IP20
911401506246	RS378B P9 940 PSD-E NB M55 PRO	Black	IP20
911401506346	RS378B P9 927 PSD-E MB M55 PRO	Black	IP20
911401506446	RS378B P9 930 PSD-E MB M55 PRO	Black	IP20
911401506546	RS378B P9 940 PSD-E MB M55 PRO	Black	IP20
911401506646	RS378B P9 927 PSD-E WB M55 PRO	Black	IP20

Order Code	Full Product Name	Housing Color	Ingress protection code
911401506746	RS378B P9 930 PSD-E WB M55 PRO	Black	IP20
911401506846	RS378B P9 940 PSD-E WB M55 PRO	Black	IP20
911401508746	RS378X P9 930 WIA MB M55 PRO	Black	IP20
911401508846	RS378X P9 930 WIA WB M55 PRO	Black	IP20
911401509346	RS378B P7 930 PSU-E MB M55 WP PRO	Black	IP20/54
911401509446	RS378B P7 930 PSU-E WB M55 WP PRO	Black	IP20/54
911401509546	RS378B P9 930 PSU-E MB M55 WP PRO	Black	IP20/54
911401509646	RS378B P9 930 PSU-E WB M55 WP PRO	Black	IP20/54
911401518946	RS378B P7 PSD-TNW NB M55 PRO	Black	IP20
911401519046	RS378B P7 PSD-TNW MB M55 PRO	Black	IP20
911401519146	RS378B P7 PSD-TNW WB M55 PRO	Black	IP20
911401519246	RS378B P9 PSD-TNW NB M55 PRO	Black	IP20
911401519346	RS378B P9 PSD-TNW MB M55 PRO	Black	IP20
911401519446	RS378B P9 PSD-TNW WB M55 PRO	Black	IP20
911401595145	RS378B P3 927 PSU-E MB D35 G-TT PRO	Black	IP20
911401595245	RS378B P3 930 PSU-E MB D35 G-TT PRO	Black	IP20
911401595345	RS378B P3 940 PSU-E MB D35 G-TT PRO	Black	IP20
911401595445	RS378B P3 927 PSU-E WB D35 G-TT PRO	Black	IP20
911401595545	RS378B P3 930 PSU-E WB D35 G-TT PRO	Black	IP20
911401595645	RS378B P3 940 PSU-E WB D35 G-TT PRO	Black	IP20
911401595745	RS378B P5 927 PSU-E MB D35 G-TT PRO	Black	IP20
911401595845	RS378B P5 930 PSU-E MB D35 G-TT PRO	Black	IP20
911401595945	RS378B P5 940 PSU-E MB D35 G-TT PRO	Black	IP20
911401596045	RS378B P5 927 PSU-E WB D35 G-TT PRO	Black	IP20
911401596145	RS378B P5 930 PSU-E WB D35 G-TT PRO	Black	IP20
911401596245	RS378B P5 940 PSU-E WB D35 G-TT PRO	Black	IP20
911401596345	RS378B P5 927 PSD-E MB D35 G-TT PRO	Black	IP20
911401596445	RS378B P5 930 PSD-E MB D35 G-TT PRO	Black	IP20
911401596545	RS378B P5 940 PSD-E MB D35 G-TT PRO	Black	IP20
911401596645	RS378B P5 927 PSD-E WB D35 G-TT PRO	Black	IP20
911401596745	RS378B P5 930 PSD-E WB D35 G-TT PRO	Black	IP20
911401596845	RS378B P5 940 PSD-E WB D35 G-TT PRO	Black	IP20
911401510146	RS378B P12 927 PSU-E NB M70 PRO	Black	IP20
911401510246	RS378B P12 930 PSU-E NB M70 PRO	Black	IP20
911401510346	RS378B P12 940 PSU-E NB M70 PRO	Black	IP20
911401510446	RS378B P12 927 PSU-E MB M70 PRO	Black	IP20
911401510546	RS378B P12 930 PSU-E MB M70 PRO	Black	IP20
911401510646	RS378B P12 940 PSU-E MB M70 PRO	Black	IP20
911401510746	RS378B P12 927 PSU-E WB M70 PRO	Black	IP20
911401510846	RS378B P12 930 PSU-E WB M70 PRO	Black	IP20
911401510946	RS378B P12 940 PSU-E WB M70 PRO	Black	IP20
911401511046	RS378B P17 927 PSU-E NB M70 PRO	Black	IP20

Order Code	Full Product Name	Housing Color	Ingress protection code
911401511146	RS378B P17 930 PSU-E NB M70 PRO	Black	IP20
911401511246	RS378B P17 940 PSU-E NB M70 PRO	Black	IP20
911401511346	RS378B P17 927 PSU-E MB M70 PRO	Black	IP20
911401511446	RS378B P17 930 PSU-E MB M70 PRO	Black	IP20
911401511546	RS378B P17 940 PSU-E MB M70 PRO	Black	IP20
911401511646	RS378B P17 927 PSU-E WB M70 PRO	Black	IP20
911401511746	RS378B P17 930 PSU-E WB M70 PRO	Black	IP20
911401511846	RS378B P17 940 PSU-E WB M70 PRO	Black	IP20
911401511946	RS378B P19 927 PSU-E NB M70 PRO	Black	IP20
911401512046	RS378B P19 930 PSU-E NB M70 PRO	Black	IP20
911401512146	RS378B P19 940 PSU-E NB M70 PRO	Black	IP20
911401512246	RS378B P19 927 PSU-E MB M70 PRO	Black	IP20
911401512346	RS378B P19 930 PSU-E MB M70 PRO	Black	IP20
911401512446	RS378B P19 940 PSU-E MB M70 PRO	Black	IP20
911401512546	RS378B P19 927 PSU-E WB M70 PRO	Black	IP20
911401512646	RS378B P19 930 PSU-E WB M70 PRO	Black	IP20
911401512746	RS378B P19 940 PSU-E WB M70 PRO	Black	IP20
911401513746	RS378B P12 927 PSD-E NB M70 PRO	Black	IP20
911401513846	RS378B P12 930 PSD-E NB M70 PRO	Black	IP20
911401513946	RS378B P12 940 PSD-E NB M70 PRO	Black	IP20
911401514046	RS378B P12 927 PSD-E MB M70 PRO	Black	IP20
911401514146	RS378B P12 930 PSD-E MB M70 PRO	Black	IP20
911401514246	RS378B P12 940 PSD-E MB M70 PRO	Black	IP20
911401514346	RS378B P12 927 PSD-E WB M70 PRO	Black	IP20
911401514446	RS378B P12 930 PSD-E WB M70 PRO	Black	IP20
911401514546	RS378B P12 940 PSD-E WB M70 PRO	Black	IP20
911401514646	RS378B P18 927 PSD-E NB M70 PRO	Black	IP20
911401514746	RS378B P18 930 PSD-E NB M70 PRO	Black	IP20
911401514846	RS378B P18 940 PSD-E NB M70 PRO	Black	IP20
911401514946	RS378B P18 927 PSD-E MB M70 PRO	Black	IP20
911401515046	RS378B P18 930 PSD-E MB M70 PRO	Black	IP20
911401515146	RS378B P18 940 PSD-E MB M70 PRO	Black	IP20
911401515246	RS378B P18 927 PSD-E WB M70 PRO	Black	IP20
911401515346	RS378B P18 930 PSD-E WB M70 PRO	Black	IP20
911401515446	RS378B P18 940 PSD-E WB M70 PRO	Black	IP20
911401515546	RS378B P20 927 PSD-E NB M70 PRO	Black	IP20
911401515646	RS378B P20 930 PSD-E NB M70 PRO	Black	IP20
911401515746	RS378B P20 940 PSD-E NB M70 PRO	Black	IP20
911401515846	RS378B P20 927 PSD-E MB M70 PRO	Black	IP20
911401515946	RS378B P20 930 PSD-E MB M70 PRO	Black	IP20
911401516046	RS378B P20 940 PSD-E MB M70 PRO	Black	IP20
911401516146	RS378B P20 927 PSD-E WB M70 PRO	Black	IP20

Order Code	Full Product Name	Housing Color	Ingress protection code
911401516246	RS378B P20 930 PSD-E WB M70 PRO	Black	IP20
911401516346	RS378B P20 940 PSD-E WB M70 PRO	Black	IP20
911401517346	RS378X P12 930 WIA MB M70 PRO	Black	IP20
911401517446	RS378X P12 930 WIA WB M70 PRO	Black	IP20
911401517546	RS378X P19 930 WIA MB M70 PRO	Black	IP20
911401517646	RS378X P19 930 WIA WB M70 PRO	Black	IP20
911401517746	RS378X P18 930 WIA MB M70 PRO	Black	IP20
911401517846	RS378X P18 930 WIA WB M70 PRO	Black	IP20
911401518146	RS378B P12 930 PSU-E MB M70 WP PRO	Black	IP20/54
911401518246	RS378B P12 930 PSU-E WB M70 WP PRO	Black	IP20/54
911401518346	RS378B P17 930 PSU-E MB M70 WP PRO	Black	IP20/54
911401518446	RS378B P17 930 PSU-E WB M70 WP PRO	Black	IP20/54
911401518546	RS378B P19 930 PSU-E MB M70 WP PRO	Black	IP20/54
911401518646	RS378B P19 930 PSU-E WB M70 WP PRO	Black	IP20/54
911401520446	RS378B P13 PSD-TNW NB M70 PRO	Black	IP20
911401520546	RS378B P13 PSD-TNW MB M70 PRO	Black	IP20
911401520646	RS378B P13 PSD-TNW WB M70 PRO	Black	IP20
911401520746	RS378B P19 PSD-TNW NB M70 PRO	Black	IP20
911401520846	RS378B P19 PSD-TNW MB M70 PRO	Black	IP20
911401520946	RS378B P19 PSD-TNW WB M70 PRO	Black	IP20
911401521046	RS378B P22 PSD-TNW NB M70 PRO	Black	IP20
911401521146	RS378B P22 PSD-TNW MB M70 PRO	Black	IP20
911401521246	RS378B P22 PSD-TNW WB M70 PRO	Black	IP20
911401512846	RS378B P27 927 PSU-E NB M70 PRO	Black	IP20
911401512946	RS378B P27 930 PSU-E NB M70 PRO	Black	IP20
911401513046	RS378B P27 940 PSU-E NB M70 PRO	Black	IP20
911401513146	RS378B P27 927 PSU-E MB M70 PRO	Black	IP20
911401513246	RS378B P27 930 PSU-E MB M70 PRO	Black	IP20
911401513346	RS378B P27 940 PSU-E MB M70 PRO	Black	IP20
911401513446	RS378B P27 927 PSU-E WB M70 PRO	Black	IP20
911401513546	RS378B P27 930 PSU-E WB M70 PRO	Black	IP20
911401513646	RS378B P27 940 PSU-E WB M70 PRO	Black	IP20
911401516446	RS378B P27 927 PSD-E NB M70 PRO	Black	IP20
911401516546	RS378B P27 930 PSD-E NB M70 PRO	Black	IP20
911401516646	RS378B P27 940 PSD-E NB M70 PRO	Black	IP20
911401516746	RS378B P27 927 PSD-E MB M70 PRO	Black	IP20
911401516846	RS378B P27 930 PSD-E MB M70 PRO	Black	IP20
911401516946	RS378B P27 940 PSD-E MB M70 PRO	Black	IP20
911401517046	RS378B P27 927 PSD-E WB M70 PRO	Black	IP20
911401517146	RS378B P27 930 PSD-E WB M70 PRO	Black	IP20
911401517246	RS378B P27 940 PSD-E WB M70 PRO	Black	IP20
911401517946	RS378X P28 930 WIA MB M70 PRO	Black	IP20

Order Code	Full Product Name	Housing Color	Ingress protection code
911401518046	RS378X P28 930 WIA WB M70 PRO	Black	IP20
911401518746	RS378B P27 930 PSU-E MB M70 WP PRO	Black	IP20/54
911401518846	RS378B P27 930 PSU-E WB M70 WP PRO	Black	IP20/54
911401521346	RS378B P29 PSD-TNW NB M70 PRO	Black	IP20
911401521446	RS378B P29 PSD-TNW MB M70 PRO	Black	IP20
911401521546	RS378B P29 PSD-TNW WB M70 PRO	Black	IP20
911401580947	RS378B P7 930 PSD VWB D55 G-TT PROCAU	Black	IP20
911401581047	RS378B P7 930 PSD VWB WP D55 G-TT PROCAU	Black	IP20/54
911401581347	RS378B P7 930 PSD MB D55 G-TT PROCAU	Black	IP20
911401581447	RS378B P7 930 PSD MB WP D55 G-TT PROCAU	Black	IP20/54
911401530846	SM378B S P8 927 PSU-E NB D100 G-TT PRO	White	IP20
911401530946	SM378B S P8 930 PSU-E NB D100 G-TT PRO	White	IP20
911401531046	SM378B S P8 940 PSU-E NB D100 G-TT PRO	White	IP20
911401531146	SM378B S P8 927 PSU-E MB D100 G-TT PRO	White	IP20
911401531246	SM378B S P8 930 PSU-E MB D100 G-TT PRO	White	IP20
911401531346	SM378B S P8 940 PSU-E MB D100 G-TT PRO	White	IP20
911401531446	SM378B S P8 927 PSU-E WB D100 G-TT PRO	White	IP20
911401531546	SM378B S P8 930 PSU-E WB D100 G-TT PRO	White	IP20
911401531646	SM378B S P8 940 PSU-E WB D100 G-TT PRO	White	IP20
911401531746	SM378B S P11 927 PSU-E NB D100 G-TT PRO	White	IP20
911401531846	SM378B S P11 930 PSU-E NB D100 G-TT PRO	White	IP20
911401531946	SM378B S P11 940 PSU-E NB D100 G-TT PRO	White	IP20
911401532046	SM378B S P11 927 PSU-E MB D100 G-TT PRO	White	IP20
911401532146	SM378B S P11 930 PSU-E MB D100 G-TT PRO	White	IP20
911401532246	SM378B S P11 940 PSU-E MB D100 G-TT PRO	White	IP20
911401532346	SM378B S P11 927 PSU-E WB D100 G-TT PRO	White	IP20
911401532446	SM378B S P11 930 PSU-E WB D100 G-TT PRO	White	IP20
911401532546	SM378B S P11 940 PSU-E WB D100 G-TT PRO	White	IP20
911401532646	SM378B S P13 927 PSU-E NB D100 G-TT PRO	White	IP20
911401532746	SM378B S P13 930 PSU-E NB D100 G-TT PRO	White	IP20
911401532846	SM378B S P13 940 PSU-E NB D100 G-TT PRO	White	IP20
911401532946	SM378B S P13 927 PSU-E MB D100 G-TT PRO	White	IP20
911401533046	SM378B S P13 930 PSU-E MB D100 G-TT PRO	White	IP20
911401533146	SM378B S P13 940 PSU-E MB D100 G-TT PRO	White	IP20
911401533246	SM378B S P13 927 PSU-E WB D100 G-TT PRO	White	IP20
911401533346	SM378B S P13 930 PSU-E WB D100 G-TT PRO	White	IP20
911401533446	SM378B S P13 940 PSU-E WB D100 G-TT PRO	White	IP20
911401533546	SM378B S P20 927 PSU-E NB D100 G-TT PRO	White	IP20
911401533646	SM378B S P20 930 PSU-E NB D100 G-TT PRO	White	IP20
911401533746	SM378B S P20 940 PSU-E NB D100 G-TT PRO	White	IP20
911401533846	SM378B S P20 927 PSU-E MB D100 G-TT PRO	White	IP20
911401533946	SM378B S P20 930 PSU-E MB D100 G-TT PRO	White	IP20

Order Code	Full Product Name	Housing Color	Ingress protection code
911401534046	SM378B S P20 940 PSU-E MB D100 G-TT PRO	White	IP20
911401534146	SM378B S P20 927 PSU-E WB D100 G-TT PRO	White	IP20
911401534246	SM378B S P20 930 PSU-E WB D100 G-TT PRO	White	IP20
911401534346	SM378B S P20 940 PSU-E WB D100 G-TT PRO	White	IP20
911401534446	SM378B S P20 927 PSD-E NB D100 G-TT PRO	White	IP20
911401534546	SM378B S P20 930 PSD-E NB D100 G-TT PRO	White	IP20
911401534646	SM378B S P20 940 PSD-E NB D100 G-TT PRO	White	IP20
911401534746	SM378B S P20 927 PSD-E MB D100 G-TT PRO	White	IP20
911401534846	SM378B S P20 930 PSD-E MB D100 G-TT PRO	White	IP20
911401534946	SM378B S P20 940 PSD-E MB D100 G-TT PRO	White	IP20
911401535046	SM378B S P20 927 PSD-E WB D100 G-TT PRO	White	IP20
911401535146	SM378B S P20 930 PSD-E WB D100 G-TT PRO	White	IP20
911401535246	SM378B S P20 940 PSD-E WB D100 G-TT PRO	White	IP20
911401535446	SM378B S P8 927 PSD-E NB D100 G-TT PRO	White	IP20
911401535546	SM378B S P8 930 PSD-E NB D100 G-TT PRO	White	IP20
911401535646	SM378B S P8 940 PSD-E NB D100 G-TT PRO	White	IP20
911401535746	SM378B S P8 927 PSD-E MB D100 G-TT PRO	White	IP20
911401535846	SM378B S P8 930 PSD-E MB D100 G-TT PRO	White	IP20
911401535946	SM378B S P8 940 PSD-E MB D100 G-TT PRO	White	IP20
911401536046	SM378B S P8 927 PSD-E WB D100 G-TT PRO	White	IP20
911401536146	SM378B S P8 930 PSD-E WB D100 G-TT PRO	White	IP20
911401536246	SM378B S P8 940 PSD-E WB D100 G-TT PRO	White	IP20
911401536346	SM378B S P12 927 PSD-E NB D100 G-TT PRO	White	IP20
911401536446	SM378B S P12 930 PSD-E NB D100 G-TT PRO	White	IP20
911401536546	SM378B S P12 940 PSD-E NB D100 G-TT PRO	White	IP20
911401536646	SM378B S P12 927 PSD-E MB D100 G-TT PRO	White	IP20
911401536746	SM378B S P12 930 PSD-E MB D100 G-TT PRO	White	IP20
911401536846	SM378B S P12 940 PSD-E MB D100 G-TT PRO	White	IP20
911401536946	SM378B S P12 927 PSD-E WB D100 G-TT PRO	White	IP20
911401537046	SM378B S P12 930 PSD-E WB D100 G-TT PRO	White	IP20
911401537146	SM378B S P12 940 PSD-E WB D100 G-TT PRO	White	IP20
911401537246	SM378B S P14 927 PSD-E NB D100 G-TT PRO	White	IP20
911401537346	SM378B S P14 930 PSD-E NB D100 G-TT PRO	White	IP20
911401537446	SM378B S P14 940 PSD-E NB D100 G-TT PRO	White	IP20
911401537546	SM378B S P14 927 PSD-E MB D100 G-TT PRO	White	IP20
911401537646	SM378B S P14 930 PSD-E MB D100 G-TT PRO	White	IP20
911401537746	SM378B S P14 940 PSD-E MB D100 G-TT PRO	White	IP20
911401537846	SM378B S P14 927 PSD-E WB D100 G-TT PRO	White	IP20
911401537946	SM378B S P14 930 PSD-E WB D100 G-TT PRO	White	IP20
911401538046	SM378B S P14 940 PSD-E WB D100 G-TT PRO	White	IP20
911401538146	SM378X S P8 930 WIA MB D100 G-TT PRO	White	IP20
911401538246	SM378X S P8 930 WIA WB D100 G-TT PRO	White	IP20

Order Code	Full Product Name	Housing Color	Ingress protection code
911401538346	SM378X S P12 930 WIA MB D100 G-TT PRO	White	IP20
911401538446	SM378X S P12 930 WIA WB D100 G-TT PRO	White	IP20
911401538546	SM378X S P14 930 WIA MB D100 G-TT PRO	White	IP20
911401538646	SM378X S P14 930 WIA WB D100 G-TT PRO	White	IP20
911401538746	SM378X S P20 930 WIA MB D100 G-TT PRO	White	IP20
911401538846	SM378X S P20 930 WIA WB D100 G-TT PRO	White	IP20
911401538946	SM378B S P9 PSD-TNW NB D100 G-TT PRO	White	IP20
911401539046	SM378B S P9 PSD-TNW MB D100 G-TT PRO	White	IP20
911401539146	SM378B S P9 PSD-TNW WB D100 G-TT PRO	White	IP20
911401539246	SM378B S P12 PSD-TNW NB D100 G-TT PRO	White	IP20
911401539346	SM378B S P12 PSD-TNW MB D100 G-TT PRO	White	IP20
911401539446	SM378B S P12 PSD-TNW WB D100 G-TT PRO	White	IP20
911401539546	SM378B S P15 PSD-TNW NB D100 G-TT PRO	White	IP20
911401539646	SM378B S P15 PSD-TNW MB D100 G-TT PRO	White	IP20
911401539746	SM378B S P15 PSD-TNW WB D100 G-TT PRO	White	IP20
911401539846	SM378B S P22 PSD-TNW NB D100 G-TT PRO	White	IP20
911401539946	SM378B S P22 PSD-TNW MB D100 G-TT PRO	White	IP20
911401540046	SM378B S P22 PSD-TNW WB D100 G-TT PRO	White	IP20
911401581147	RS378B P7 930 PSD VWB WP D55 M-WH PROCAU	Black	IP20/54
911401581247	RS378B P7 930 PSD VWB D55 M-WH PROCAU	Black	IP20
911401581547	RS378B P7 930 PSD MB WP D55 M-WH PROCAU	Black	IP20/54
911401581647	RS378B P7 930 PSD MB D55 M-WH PROCAU	Black	IP20
911401582547	RS378B P12 930 PSD VWB D100 G-TT PROCAU	Black	IP20
911401582647	RS378B P12 930 PSD VWB WP D100G-TTPROCAU	Black	IP20/54
911401582947	RS378B P12 930 PSD MB D100 G-TT PROCAU	Black	IP20
911401583047	RS378B P12 930 PSD MB WP D100G-TTPROCAU	Black	IP20/54
911401503046	RS378B P12 927 PSU-E NB M55 PRO	Black	IP20
911401503146	RS378B P12 930 PSU-E NB M55 PRO	Black	IP20
911401503246	RS378B P12 940 PSU-E NB M55 PRO	Black	IP20
911401503346	RS378B P12 927 PSU-E MB M55 PRO	Black	IP20
911401503446	RS378B P12 930 PSU-E MB M55 PRO	Black	IP20
911401503546	RS378B P12 940 PSU-E MB M55 PRO	Black	IP20
911401503646	RS378B P12 927 PSU-E WB M55 PRO	Black	IP20
911401503746	RS378B P12 930 PSU-E WB M55 PRO	Black	IP20
911401503846	RS378B P12 940 PSU-E WB M55 PRO	Black	IP20
911401503946	RS378B P14 927 PSU-E NB M55 PRO	Black	IP20
911401504046	RS378B P14 930 PSU-E NB M55 PRO	Black	IP20
911401504146	RS378B P14 940 PSU-E NB M55 PRO	Black	IP20
911401504246	RS378B P14 927 PSU-E MB M55 PRO	Black	IP20
911401504346	RS378B P14 930 PSU-E MB M55 PRO	Black	IP20
911401504446	RS378B P14 940 PSU-E MB M55 PRO	Black	IP20
911401504546	RS378B P14 927 PSU-E WB M55 PRO	Black	IP20

Order Code	Full Product Name	Housing Color	Ingress protection code
911401504646	RS378B P14 930 PSU-E WB M55 PRO	Black	IP20
911401504746	RS378B P14 940 PSU-E WB M55 PRO	Black	IP20
911401506946	RS378B P13 927 PSD-E NB M55 PRO	Black	IP20
911401507046	RS378B P13 930 PSD-E NB M55 PRO	Black	IP20
911401507146	RS378B P13 940 PSD-E NB M55 PRO	Black	IP20
911401507246	RS378B P13 927 PSD-E MB M55 PRO	Black	IP20
911401507346	RS378B P13 930 PSD-E MB M55 PRO	Black	IP20
911401507446	RS378B P13 940 PSD-E MB M55 PRO	Black	IP20
911401507546	RS378B P13 927 PSD-E WB M55 PRO	Black	IP20
911401507646	RS378B P13 930 PSD-E WB M55 PRO	Black	IP20
911401507746	RS378B P13 940 PSD-E WB M55 PRO	Black	IP20
911401507846	RS378B P15 927 PSD-E NB M55 PRO	Black	IP20
911401507946	RS378B P15 930 PSD-E NB M55 PRO	Black	IP20
911401508046	RS378B P15 940 PSD-E NB M55 PRO	Black	IP20
911401508146	RS378B P15 927 PSD-E MB M55 PRO	Black	IP20
911401508246	RS378B P15 930 PSD-E MB M55 PRO	Black	IP20
911401508346	RS378B P15 940 PSD-E MB M55 PRO	Black	IP20
911401508446	RS378B P15 927 PSD-E WB M55 PRO	Black	IP20
911401508546	RS378B P15 930 PSD-E WB M55 PRO	Black	IP20
911401508646	RS378B P15 940 PSD-E WB M55 PRO	Black	IP20
911401508946	RS378X P12 930 WIA MB M55 PRO	Black	IP20
911401509046	RS378X P12 930 WIA WB M55 PRO	Black	IP20
911401509146	RS378X P14 930 WIA MB M55 PRO	Black	IP20
911401509246	RS378X P14 930 WIA WB M55 PRO	Black	IP20
911401509746	RS378B P12 930 PSU-E MB M55 WP PRO	Black	IP20/54
911401509846	RS378B P12 930 PSU-E WB M55 WP PRO	Black	IP20/54
911401509946	RS378B P14 930 PSU-E MB M55 WP PRO	Black	IP20/54
911401510046	RS378B P14 930 PSU-E WB M55 WP PRO	Black	IP20/54
911401519546	RS378B P13 PSD-TNW NB M55 PRO	Black	IP20
911401519646	RS378B P13 PSD-TNW MB M55 PRO	Black	IP20
911401519746	RS378B P13 PSD-TNW WB M55 PRO	Black	IP20
911401519846	RS378B P15 PSD-TNW NB M55 PRO	Black	IP20
911401519946	RS378B P15 PSD-TNW MB M55 PRO	Black	IP20
911401520046	RS378B P15 PSD-TNW WB M55 PRO	Black	IP20
911401581947	RS378B P9 930 PSD VWB WP D75 M-WH PROCAU	Black	IP20/54
911401582047	RS378B P9 930 PSD VWB D75 M-WH PROCAU	Black	IP20
911401582347	RS378B P9 930 PSD MB WP D75 M-WH PROCAU	Black	IP20/54
911401582447	RS378B P9 930 PSD MB D75 M-WH PROCAU	Black	IP20

Approval and Application

Order Code	Full Product Name	CE mark
911401521646	SM378B R P8 927 PSU-E NB D100 G-TT PRO	Yes

Order Code	Full Product Name	CE mark
911401521746	SM378B R P8 930 PSU-E NB D100 G-TT PRO	Yes
911401521846	SM378B R P8 940 PSU-E NB D100 G-TT PRO	Yes
911401521946	SM378B R P8 927 PSU-E MB D100 G-TT PRO	Yes
911401522046	SM378B R P8 930 PSU-E MB D100 G-TT PRO	Yes
911401522146	SM378B R P8 940 PSU-E MB D100 G-TT PRO	Yes
911401522246	SM378B R P8 927 PSU-E WB D100 G-TT PRO	Yes
911401522346	SM378B R P8 930 PSU-E WB D100 G-TT PRO	Yes
911401522446	SM378B R P8 940 PSU-E WB D100 G-TT PRO	Yes
911401522546	SM378B R P11 927 PSU-E NB D100 G-TT PRO	Yes
911401522646	SM378B R P11 930 PSU-E NB D100 G-TT PRO	Yes
911401522746	SM378B R P11 940 PSU-E NB D100 G-TT PRO	Yes
911401522846	SM378B R P11 927 PSU-E MB D100 G-TT PRO	Yes
911401522946	SM378B R P11 930 PSU-E MB D100 G-TT PRO	Yes
911401523046	SM378B R P11 940 PSU-E MB D100 G-TT PRO	Yes
911401523146	SM378B R P11 927 PSU-E WB D100 G-TT PRO	Yes
911401523246	SM378B R P11 930 PSU-E WB D100 G-TT PRO	Yes
911401523346	SM378B R P11 940 PSU-E WB D100 G-TT PRO	Yes
911401523446	SM378B R P13 927 PSU-E NB D100 G-TT PRO	Yes
911401523546	SM378B R P13 930 PSU-E NB D100 G-TT PRO	Yes
911401523646	SM378B R P13 940 PSU-E NB D100 G-TT PRO	Yes
911401523746	SM378B R P13 927 PSU-E MB D100 G-TT PRO	Yes
911401523846	SM378B R P13 930 PSU-E MB D100 G-TT PRO	Yes
911401523946	SM378B R P13 940 PSU-E MB D100 G-TT PRO	Yes
911401524046	SM378B R P13 927 PSU-E WB D100 G-TT PRO	Yes
911401524146	SM378B R P13 930 PSU-E WB D100 G-TT PRO	Yes
911401524246	SM378B R P13 940 PSU-E WB D100 G-TT PRO	Yes
911401524346	SM378B R P20 927 PSU-E NB D100 G-TT PRO	Yes
911401524446	SM378B R P20 930 PSU-E NB D100 G-TT PRO	Yes
911401524546	SM378B R P20 940 PSU-E NB D100 G-TT PRO	Yes
911401524646	SM378B R P20 927 PSU-E MB D100 G-TT PRO	Yes
911401524746	SM378B R P20 930 PSU-E MB D100 G-TT PRO	Yes
911401524846	SM378B R P20 940 PSU-E MB D100 G-TT PRO	Yes
911401524946	SM378B R P20 927 PSU-E WB D100 G-TT PRO	Yes
911401525046	SM378B R P20 930 PSU-E WB D100 G-TT PRO	Yes
911401525146	SM378B R P20 940 PSU-E WB D100 G-TT PRO	Yes
911401525246	SM378B R P20 927 PSD-E NB D100 G-TT PRO	Yes
911401525346	SM378B R P20 930 PSD-E NB D100 G-TT PRO	Yes
911401525446	SM378B R P20 940 PSD-E NB D100 G-TT PRO	Yes
911401525546	SM378B R P20 927 PSD-E MB D100 G-TT PRO	Yes
911401525646	SM378B R P20 930 PSD-E MB D100 G-TT PRO	Yes
911401525746	SM378B R P20 940 PSD-E MB D100 G-TT PRO	Yes
911401525846	SM378B R P20 927 PSD-E WB D100 G-TT PRO	Yes

Order Code	Full Product Name	CE mark
911401525946	SM378B R P20 930 PSD-E WB D100 G-TT PRO	Yes
911401526046	SM378B R P20 940 PSD-E WB D100 G-TT PRO	Yes
911401526146	SM378B R P8 927 PSD-E NB D100 G-TT PRO	Yes
911401526246	SM378B R P8 930 PSD-E NB D100 G-TT PRO	Yes
911401526346	SM378B R P8 940 PSD-E NB D100 G-TT PRO	Yes
911401526446	SM378B R P8 927 PSD-E MB D100 G-TT PRO	Yes
911401526546	SM378B R P8 930 PSD-E MB D100 G-TT PRO	Yes
911401526646	SM378B R P8 940 PSD-E MB D100 G-TT PRO	Yes
911401526746	SM378B R P8 927 PSD-E WB D100 G-TT PRO	Yes
911401526846	SM378B R P8 930 PSD-E WB D100 G-TT PRO	Yes
911401526946	SM378B R P8 940 PSD-E WB D100 G-TT PRO	Yes
911401527046	SM378B R P12 927 PSD-E NB D100 G-TT PRO	Yes
911401527146	SM378B R P12 930 PSD-E NB D100 G-TT PRO	Yes
911401527246	SM378B R P12 940 PSD-E NB D100 G-TT PRO	Yes
911401527346	SM378B R P12 927 PSD-E MB D100 G-TT PRO	Yes
911401527446	SM378B R P12 930 PSD-E MB D100 G-TT PRO	Yes
911401527546	SM378B R P12 940 PSD-E MB D100 G-TT PRO	Yes
911401527646	SM378B R P12 927 PSD-E WB D100 G-TT PRO	Yes
911401527746	SM378B R P12 930 PSD-E WB D100 G-TT PRO	Yes
911401527846	SM378B R P12 940 PSD-E WB D100 G-TT PRO	Yes
911401527946	SM378B R P14 927 PSD-E NB D100 G-TT PRO	Yes
911401528046	SM378B R P14 930 PSD-E NB D100 G-TT PRO	Yes
911401528146	SM378B R P14 940 PSD-E NB D100 G-TT PRO	Yes
911401528246	SM378B R P14 927 PSD-E MB D100 G-TT PRO	Yes
911401528346	SM378B R P14 930 PSD-E MB D100 G-TT PRO	Yes
911401528446	SM378B R P14 940 PSD-E MB D100 G-TT PRO	Yes
911401528546	SM378B R P14 927 PSD-E WB D100 G-TT PRO	Yes
911401528646	SM378B R P14 930 PSD-E WB D100 G-TT PRO	Yes
911401528746	SM378B R P14 940 PSD-E WB D100 G-TT PRO	Yes
911401528846	SM378X R P8 930 WIA MB D100 G-TT PRO	Yes
911401528946	SM378X R P8 930 WIA WB D100 G-TT PRO	Yes
911401529046	SM378X R P12 930 WIA MB D100 G-TT PRO	Yes
911401529146	SM378X R P12 930 WIA WB D100 G-TT PRO	Yes
911401529246	SM378X R P14 930 WIA MB D100 G-TT PRO	Yes
911401529346	SM378X R P14 930 WIA WB D100 G-TT PRO	Yes
911401529446	SM378X R P20 930 WIA MB D100 G-TT PRO	Yes
911401529546	SM378X R P20 930 WIA WB D100 G-TT PRO	Yes
911401529646	SM378B R P9 PSD-TNW NB D100 G-TT PRO	No
911401529746	SM378B R P9 PSD-TNW MB D100 G-TT PRO	No
911401529846	SM378B R P9 PSD-TNW WB D100 G-TT PRO	No
911401529946	SM378B R P12 PSD-TNW NB D100 G-TT PRO	No
911401530046	SM378B R P12 PSD-TNW MB D100 G-TT PRO	No

Order Code	Full Product Name	CE mark
911401530146	SM378B R P12 PSD-TNW WB D100 G-TT PRO	No
911401530246	SM378B R P15 PSD-TNW NB D100 G-TT PRO	No
911401530346	SM378B R P15 PSD-TNW MB D100 G-TT PRO	No
911401530446	SM378B R P15 PSD-TNW WB D100 G-TT PRO	No
911401530546	SM378B R P22 PSD-TNW NB D100 G-TT PRO	No
911401530646	SM378B R P22 PSD-TNW MB D100 G-TT PRO	No
911401530746	SM378B R P22 PSD-TNW WB D100 G-TT PRO	No
911401581747	RS378B P9 930 PSD VWB D75 G-TT PROCAU	No
911401581847	RS378B P9 930 PSD VWB WP D75 G-TT PROCAU	No
911401582147	RS378B P9 930 PSD MB D75 G-TT PROCAU	No
911401582247	RS378B P9 930 PSD MB WP D75 G-TT PROCAU	No
911401500046	RS378B P7 930 PSD-E WB M43 PRO	Yes
911401500146	RS378B P7 940 PSD-E WB M43 PRO	Yes
911401500246	RS378B P6 930 PSU-E MB M43 WP PRO	Yes
911401500346	RS378B P6 930 PSU-E WB M43 WP PRO	Yes
911401500446	RS378B P8 930 PSU-E MB M43 WP PRO	Yes
911401500546	RS378B P8 930 PSU-E WB M43 WP PRO	Yes
911401520146	RS378B P7 PSD-TNW NB M43 PRO	No
911401520246	RS378B P7 PSD-TNW MB M43 PRO	No
911401520346	RS378B P7 PSD-TNW WB M43 PRO	No
911401596945	RS378B P6 927 PSU-E SNB M43 PRO	Yes
911401597045	RS378B P6 930 PSU-E SNB M43 PRO	Yes
911401597145	RS378B P6 940 PSU-E SNB M43 PRO	Yes
911401597245	RS378B P6 927 PSU-E NB M43 PRO	Yes
911401597345	RS378B P6 930 PSU-E NB M43 PRO	Yes
911401597445	RS378B P6 940 PSU-E NB M43 PRO	Yes
911401597545	RS378B P6 927 PSU-E MB M43 PRO	Yes
911401597645	RS378B P6 930 PSU-E MB M43 PRO	Yes
911401597745	RS378B P6 940 PSU-E MB M43 PRO	Yes
911401597845	RS378B P6 927 PSU-E WB M43 PRO	Yes
911401597945	RS378B P6 930 PSU-E WB M43 PRO	Yes
911401598045	RS378B P6 940 PSU-E WB M43 PRO	Yes
911401598145	RS378B P8 927 PSU-E NB M43 PRO	Yes
911401598245	RS378B P8 930 PSU-E NB M43 PRO	Yes
911401598345	RS378B P8 940 PSU-E NB M43 PRO	Yes
911401598445	RS378B P8 927 PSU-E MB M43 PRO	Yes
911401598545	RS378B P8 930 PSU-E MB M43 PRO	Yes
911401598645	RS378B P8 940 PSU-E MB M43 PRO	Yes
911401598745	RS378B P8 927 PSU-E WB M43 PRO	Yes
911401598845	RS378B P8 930 PSU-E WB M43 PRO	Yes
911401598945	RS378B P8 940 PSU-E WB M43 PRO	Yes
911401599045	RS378B P7 927 PSD-E SNB M43 PRO	Yes

Order Code	Full Product Name	CE mark
911401599145	RS378B P7 930 PSD-E SNB M43 PRO	Yes
911401599245	RS378B P7 940 PSD-E SNB M43 PRO	Yes
911401599345	RS378B P7 927 PSD-E NB M43 PRO	Yes
911401599445	RS378B P7 930 PSD-E NB M43 PRO	Yes
911401599545	RS378B P7 940 PSD-E NB M43 PRO	Yes
911401599645	RS378B P7 927 PSD-E MB M43 PRO	Yes
911401599745	RS378B P7 930 PSD-E MB M43 PRO	Yes
911401599845	RS378B P7 940 PSD-E MB M43 PRO	Yes
911401599945	RS378B P7 927 PSD-E WB M43 PRO	Yes
911401582747	RS378B P12 930 PSD VWB WP D100M-WHPROCAU	No
911401582847	RS378B P12 930 PSD VWB D100 M-WH PROCAU	No
911401583147	RS378B P12 930 PSD MB WP D100M-WHPROCAU	No
911401583247	RS378B P12 930 PSD MB D100 M-WH PROCAU	No
911401500646	RS378B P7 927 PSU-E SNB M55 PRO	Yes
911401500746	RS378B P7 930 PSU-E SNB M55 PRO	Yes
911401500846	RS378B P7 940 PSU-E SNB M55 PRO	Yes
911401500946	RS378B P7 927 PSU-E NB M55 PRO	Yes
911401501046	RS378B P7 930 PSU-E NB M55 PRO	Yes
911401501146	RS378B P7 940 PSU-E NB M55 PRO	Yes
911401501246	RS378B P7 927 PSU-E MB M55 PRO	Yes
911401501346	RS378B P7 930 PSU-E MB M55 PRO	Yes
911401501446	RS378B P7 940 PSU-E MB M55 PRO	Yes
911401501546	RS378B P7 927 PSU-E WB M55 PRO	Yes
911401501646	RS378B P7 930 PSU-E WB M55 PRO	Yes
911401501746	RS378B P7 940 PSU-E WB M55 PRO	Yes
911401501846	RS378B P8 927 PSU-E SNB M55 PRO	Yes
911401501946	RS378B P8 930 PSU-E SNB M55 PRO	Yes
911401502046	RS378B P8 940 PSU-E SNB M55 PRO	Yes
911401502146	RS378B P9 927 PSU-E NB M55 PRO	Yes
911401502246	RS378B P9 930 PSU-E NB M55 PRO	Yes
911401502346	RS378B P9 940 PSU-E NB M55 PRO	Yes
911401502446	RS378B P9 927 PSU-E MB M55 PRO	Yes
911401502546	RS378B P9 930 PSU-E MB M55 PRO	Yes
911401502646	RS378B P9 940 PSU-E MB M55 PRO	Yes
911401502746	RS378B P9 927 PSU-E WB M55 PRO	Yes
911401502846	RS378B P9 930 PSU-E WB M55 PRO	Yes
911401502946	RS378B P9 940 PSU-E WB M55 PRO	Yes
911401504846	RS378B P7 927 PSD-E SNB M55 PRO	Yes
911401504946	RS378B P7 930 PSD-E SNB M55 PRO	Yes
911401505046	RS378B P7 940 PSD-E SNB M55 PRO	Yes
911401505146	RS378B P7 927 PSD-E NB M55 PRO	Yes
911401505246	RS378B P7 930 PSD-E NB M55 PRO	Yes

Order Code	Full Product Name	CE mark
911401505346	RS378B P7 940 PSD-E NB M55 PRO	Yes
911401505446	RS378B P7 927 PSD-E MB M55 PRO	Yes
911401505546	RS378B P7 930 PSD-E MB M55 PRO	Yes
911401505646	RS378B P7 940 PSD-E MB M55 PRO	Yes
911401505746	RS378B P7 927 PSD-E WB M55 PRO	Yes
911401505846	RS378B P7 930 PSD-E WB M55 PRO	Yes
911401505946	RS378B P7 940 PSD-E WB M55 PRO	Yes
911401506046	RS378B P9 927 PSD-E NB M55 PRO	Yes
911401506146	RS378B P9 930 PSD-E NB M55 PRO	Yes
911401506246	RS378B P9 940 PSD-E NB M55 PRO	Yes
911401506346	RS378B P9 927 PSD-E MB M55 PRO	Yes
911401506446	RS378B P9 930 PSD-E MB M55 PRO	Yes
911401506546	RS378B P9 940 PSD-E MB M55 PRO	Yes
911401506646	RS378B P9 927 PSD-E WB M55 PRO	Yes
911401506746	RS378B P9 930 PSD-E WB M55 PRO	Yes
911401506846	RS378B P9 940 PSD-E WB M55 PRO	Yes
911401508746	RS378X P9 930 WIA MB M55 PRO	Yes
911401508846	RS378X P9 930 WIA WB M55 PRO	Yes
911401509346	RS378B P7 930 PSU-E MB M55 WP PRO	Yes
911401509446	RS378B P7 930 PSU-E WB M55 WP PRO	Yes
911401509546	RS378B P9 930 PSU-E MB M55 WP PRO	Yes
911401509646	RS378B P9 930 PSU-E WB M55 WP PRO	Yes
911401518946	RS378B P7 PSD-TNW NB M55 PRO	No
911401519046	RS378B P7 PSD-TNW MB M55 PRO	No
911401519146	RS378B P7 PSD-TNW WB M55 PRO	No
911401519246	RS378B P9 PSD-TNW NB M55 PRO	No
911401519346	RS378B P9 PSD-TNW MB M55 PRO	No
911401519446	RS378B P9 PSD-TNW WB M55 PRO	No
911401595145	RS378B P3 927 PSU-E MB D35 G-TT PRO	Yes
911401595245	RS378B P3 930 PSU-E MB D35 G-TT PRO	Yes
911401595345	RS378B P3 940 PSU-E MB D35 G-TT PRO	Yes
911401595445	RS378B P3 927 PSU-E WB D35 G-TT PRO	Yes
911401595545	RS378B P3 930 PSU-E WB D35 G-TT PRO	Yes
911401595645	RS378B P3 940 PSU-E WB D35 G-TT PRO	Yes
911401595745	RS378B P5 927 PSU-E MB D35 G-TT PRO	Yes
911401595845	RS378B P5 930 PSU-E MB D35 G-TT PRO	Yes
911401595945	RS378B P5 940 PSU-E MB D35 G-TT PRO	Yes
911401596045	RS378B P5 927 PSU-E WB D35 G-TT PRO	Yes
911401596145	RS378B P5 930 PSU-E WB D35 G-TT PRO	Yes
911401596245	RS378B P5 940 PSU-E WB D35 G-TT PRO	Yes
911401596345	RS378B P5 927 PSD-E MB D35 G-TT PRO	Yes
911401596445	RS378B P5 930 PSD-E MB D35 G-TT PRO	Yes

Order Code	Full Product Name	CE mark
911401596545	RS378B P5 940 PSD-E MB D35 G-TT PRO	Yes
911401596645	RS378B P5 927 PSD-E WB D35 G-TT PRO	Yes
911401596745	RS378B P5 930 PSD-E WB D35 G-TT PRO	Yes
911401596845	RS378B P5 940 PSD-E WB D35 G-TT PRO	Yes
911401510146	RS378B P12 927 PSU-E NB M70 PRO	Yes
911401510246	RS378B P12 930 PSU-E NB M70 PRO	Yes
911401510346	RS378B P12 940 PSU-E NB M70 PRO	Yes
911401510446	RS378B P12 927 PSU-E MB M70 PRO	Yes
911401510546	RS378B P12 930 PSU-E MB M70 PRO	Yes
911401510646	RS378B P12 940 PSU-E MB M70 PRO	Yes
911401510746	RS378B P12 927 PSU-E WB M70 PRO	Yes
911401510846	RS378B P12 930 PSU-E WB M70 PRO	Yes
911401510946	RS378B P12 940 PSU-E WB M70 PRO	Yes
911401511046	RS378B P17 927 PSU-E NB M70 PRO	Yes
911401511146	RS378B P17 930 PSU-E NB M70 PRO	Yes
911401511246	RS378B P17 940 PSU-E NB M70 PRO	Yes
911401511346	RS378B P17 927 PSU-E MB M70 PRO	Yes
911401511446	RS378B P17 930 PSU-E MB M70 PRO	Yes
911401511546	RS378B P17 940 PSU-E MB M70 PRO	Yes
911401511646	RS378B P17 927 PSU-E WB M70 PRO	Yes
911401511746	RS378B P17 930 PSU-E WB M70 PRO	Yes
911401511846	RS378B P17 940 PSU-E WB M70 PRO	Yes
911401511946	RS378B P19 927 PSU-E NB M70 PRO	Yes
911401512046	RS378B P19 930 PSU-E NB M70 PRO	Yes
911401512146	RS378B P19 940 PSU-E NB M70 PRO	Yes
911401512246	RS378B P19 927 PSU-E MB M70 PRO	Yes
911401512346	RS378B P19 930 PSU-E MB M70 PRO	Yes
911401512446	RS378B P19 940 PSU-E MB M70 PRO	Yes
911401512546	RS378B P19 927 PSU-E WB M70 PRO	Yes
911401512646	RS378B P19 930 PSU-E WB M70 PRO	Yes
911401512746	RS378B P19 940 PSU-E WB M70 PRO	Yes
911401513746	RS378B P12 927 PSD-E NB M70 PRO	Yes
911401513846	RS378B P12 930 PSD-E NB M70 PRO	Yes
911401513946	RS378B P12 940 PSD-E NB M70 PRO	Yes
911401514046	RS378B P12 927 PSD-E MB M70 PRO	Yes
911401514146	RS378B P12 930 PSD-E MB M70 PRO	Yes
911401514246	RS378B P12 940 PSD-E MB M70 PRO	Yes
911401514346	RS378B P12 927 PSD-E WB M70 PRO	Yes
911401514446	RS378B P12 930 PSD-E WB M70 PRO	Yes
911401514546	RS378B P12 940 PSD-E WB M70 PRO	Yes
911401514646	RS378B P18 927 PSD-E NB M70 PRO	Yes
911401514746	RS378B P18 930 PSD-E NB M70 PRO	Yes

Order Code	Full Product Name	CE mark
911401514846	RS378B P18 940 PSD-E NB M70 PRO	Yes
911401514946	RS378B P18 927 PSD-E MB M70 PRO	Yes
911401515046	RS378B P18 930 PSD-E MB M70 PRO	Yes
911401515146	RS378B P18 940 PSD-E MB M70 PRO	Yes
911401515246	RS378B P18 927 PSD-E WB M70 PRO	Yes
911401515346	RS378B P18 930 PSD-E WB M70 PRO	Yes
911401515446	RS378B P18 940 PSD-E WB M70 PRO	Yes
911401515546	RS378B P20 927 PSD-E NB M70 PRO	Yes
911401515646	RS378B P20 930 PSD-E NB M70 PRO	Yes
911401515746	RS378B P20 940 PSD-E NB M70 PRO	Yes
911401515846	RS378B P20 927 PSD-E MB M70 PRO	Yes
911401515946	RS378B P20 930 PSD-E MB M70 PRO	Yes
911401516046	RS378B P20 940 PSD-E MB M70 PRO	Yes
911401516146	RS378B P20 927 PSD-E WB M70 PRO	Yes
911401516246	RS378B P20 930 PSD-E WB M70 PRO	Yes
911401516346	RS378B P20 940 PSD-E WB M70 PRO	Yes
911401517346	RS378X P12 930 WIA MB M70 PRO	Yes
911401517446	RS378X P12 930 WIA WB M70 PRO	Yes
911401517546	RS378X P19 930 WIA MB M70 PRO	Yes
911401517646	RS378X P19 930 WIA WB M70 PRO	Yes
911401517746	RS378X P18 930 WIA MB M70 PRO	Yes
911401517846	RS378X P18 930 WIA WB M70 PRO	Yes
911401518146	RS378B P12 930 PSU-E MB M70 WP PRO	Yes
911401518246	RS378B P12 930 PSU-E WB M70 WP PRO	Yes
911401518346	RS378B P17 930 PSU-E MB M70 WP PRO	Yes
911401518446	RS378B P17 930 PSU-E WB M70 WP PRO	Yes
911401518546	RS378B P19 930 PSU-E MB M70 WP PRO	Yes
911401518646	RS378B P19 930 PSU-E WB M70 WP PRO	Yes
911401520446	RS378B P13 PSD-TNW NB M70 PRO	No
911401520546	RS378B P13 PSD-TNW MB M70 PRO	No
911401520646	RS378B P13 PSD-TNW WB M70 PRO	No
911401520746	RS378B P19 PSD-TNW NB M70 PRO	No
911401520846	RS378B P19 PSD-TNW MB M70 PRO	No
911401520946	RS378B P19 PSD-TNW WB M70 PRO	No
911401521046	RS378B P22 PSD-TNW NB M70 PRO	No
911401521146	RS378B P22 PSD-TNW MB M70 PRO	No
911401521246	RS378B P22 PSD-TNW WB M70 PRO	No
911401512846	RS378B P27 927 PSU-E NB M70 PRO	Yes
911401512946	RS378B P27 930 PSU-E NB M70 PRO	Yes
911401513046	RS378B P27 940 PSU-E NB M70 PRO	Yes
911401513146	RS378B P27 927 PSU-E MB M70 PRO	Yes
911401513246	RS378B P27 930 PSU-E MB M70 PRO	Yes

Order Code	Full Product Name	CE mark
911401513346	RS378B P27 940 PSU-E MB M70 PRO	Yes
911401513446	RS378B P27 927 PSU-E WB M70 PRO	Yes
911401513546	RS378B P27 930 PSU-E WB M70 PRO	Yes
911401513646	RS378B P27 940 PSU-E WB M70 PRO	Yes
911401516446	RS378B P27 927 PSD-E NB M70 PRO	Yes
911401516546	RS378B P27 930 PSD-E NB M70 PRO	Yes
911401516646	RS378B P27 940 PSD-E NB M70 PRO	Yes
911401516746	RS378B P27 927 PSD-E MB M70 PRO	Yes
911401516846	RS378B P27 930 PSD-E MB M70 PRO	Yes
911401516946	RS378B P27 940 PSD-E MB M70 PRO	Yes
911401517046	RS378B P27 927 PSD-E WB M70 PRO	Yes
911401517146	RS378B P27 930 PSD-E WB M70 PRO	Yes
911401517246	RS378B P27 940 PSD-E WB M70 PRO	Yes
911401517946	RS378X P28 930 WIA MB M70 PRO	Yes
911401518046	RS378X P28 930 WIA WB M70 PRO	Yes
911401518746	RS378B P27 930 PSU-E MB M70 WP PRO	Yes
911401518846	RS378B P27 930 PSU-E WB M70 WP PRO	Yes
911401521346	RS378B P29 PSD-TNW NB M70 PRO	No
911401521446	RS378B P29 PSD-TNW MB M70 PRO	No
911401521546	RS378B P29 PSD-TNW WB M70 PRO	No
911401580947	RS378B P7 930 PSD VWB D55 G-TT PROCAU	No
911401581047	RS378B P7 930 PSD VWB WP D55 G-TT PROCAU	No
911401581347	RS378B P7 930 PSD MB D55 G-TT PROCAU	No
911401581447	RS378B P7 930 PSD MB WP D55 G-TT PROCAU	No
911401530846	SM378B S P8 927 PSU-E NB D100 G-TT PRO	Yes
911401530946	SM378B S P8 930 PSU-E NB D100 G-TT PRO	Yes
911401531046	SM378B S P8 940 PSU-E NB D100 G-TT PRO	Yes
911401531146	SM378B S P8 927 PSU-E MB D100 G-TT PRO	Yes
911401531246	SM378B S P8 930 PSU-E MB D100 G-TT PRO	Yes
911401531346	SM378B S P8 940 PSU-E MB D100 G-TT PRO	Yes
911401531446	SM378B S P8 927 PSU-E WB D100 G-TT PRO	Yes
911401531546	SM378B S P8 930 PSU-E WB D100 G-TT PRO	Yes
911401531646	SM378B S P8 940 PSU-E WB D100 G-TT PRO	Yes
911401531746	SM378B S P11 927 PSU-E NB D100 G-TT PRO	Yes
911401531846	SM378B S P11 930 PSU-E NB D100 G-TT PRO	Yes
911401531946	SM378B S P11 940 PSU-E NB D100 G-TT PRO	Yes
911401532046	SM378B S P11 927 PSU-E MB D100 G-TT PRO	Yes
911401532146	SM378B S P11 930 PSU-E MB D100 G-TT PRO	Yes
911401532246	SM378B S P11 940 PSU-E MB D100 G-TT PRO	Yes
911401532346	SM378B S P11 927 PSU-E WB D100 G-TT PRO	Yes
911401532446	SM378B S P11 930 PSU-E WB D100 G-TT PRO	Yes
911401532546	SM378B S P11 940 PSU-E WB D100 G-TT PRO	Yes

Order Code	Full Product Name	CE mark
911401532646	SM378B S P13 927 PSU-E NB D100 G-TT PRO	Yes
911401532746	SM378B S P13 930 PSU-E NB D100 G-TT PRO	Yes
911401532846	SM378B S P13 940 PSU-E NB D100 G-TT PRO	Yes
911401532946	SM378B S P13 927 PSU-E MB D100 G-TT PRO	Yes
911401533046	SM378B S P13 930 PSU-E MB D100 G-TT PRO	Yes
911401533146	SM378B S P13 940 PSU-E MB D100 G-TT PRO	Yes
911401533246	SM378B S P13 927 PSU-E WB D100 G-TT PRO	Yes
911401533346	SM378B S P13 930 PSU-E WB D100 G-TT PRO	Yes
911401533446	SM378B S P13 940 PSU-E WB D100 G-TT PRO	Yes
911401533546	SM378B S P20 927 PSU-E NB D100 G-TT PRO	Yes
911401533646	SM378B S P20 930 PSU-E NB D100 G-TT PRO	Yes
911401533746	SM378B S P20 940 PSU-E NB D100 G-TT PRO	Yes
911401533846	SM378B S P20 927 PSU-E MB D100 G-TT PRO	Yes
911401533946	SM378B S P20 930 PSU-E MB D100 G-TT PRO	Yes
911401534046	SM378B S P20 940 PSU-E MB D100 G-TT PRO	Yes
911401534146	SM378B S P20 927 PSU-E WB D100 G-TT PRO	Yes
911401534246	SM378B S P20 930 PSU-E WB D100 G-TT PRO	Yes
911401534346	SM378B S P20 940 PSU-E WB D100 G-TT PRO	Yes
911401534446	SM378B S P20 927 PSD-E NB D100 G-TT PRO	Yes
911401534546	SM378B S P20 930 PSD-E NB D100 G-TT PRO	Yes
911401534646	SM378B S P20 940 PSD-E NB D100 G-TT PRO	Yes
911401534746	SM378B S P20 927 PSD-E MB D100 G-TT PRO	Yes
911401534846	SM378B S P20 930 PSD-E MB D100 G-TT PRO	Yes
911401534946	SM378B S P20 940 PSD-E MB D100 G-TT PRO	Yes
911401535046	SM378B S P20 927 PSD-E WB D100 G-TT PRO	Yes
911401535146	SM378B S P20 930 PSD-E WB D100 G-TT PRO	Yes
911401535246	SM378B S P20 940 PSD-E WB D100 G-TT PRO	Yes
911401535446	SM378B S P8 927 PSD-E NB D100 G-TT PRO	Yes
911401535546	SM378B S P8 930 PSD-E NB D100 G-TT PRO	Yes
911401535646	SM378B S P8 940 PSD-E NB D100 G-TT PRO	Yes
911401535746	SM378B S P8 927 PSD-E MB D100 G-TT PRO	Yes
911401535846	SM378B S P8 930 PSD-E MB D100 G-TT PRO	Yes
911401535946	SM378B S P8 940 PSD-E MB D100 G-TT PRO	Yes
911401536046	SM378B S P8 927 PSD-E WB D100 G-TT PRO	Yes
911401536146	SM378B S P8 930 PSD-E WB D100 G-TT PRO	Yes
911401536246	SM378B S P8 940 PSD-E WB D100 G-TT PRO	Yes
911401536346	SM378B S P12 927 PSD-E NB D100 G-TT PRO	Yes
911401536446	SM378B S P12 930 PSD-E NB D100 G-TT PRO	Yes
911401536546	SM378B S P12 940 PSD-E NB D100 G-TT PRO	Yes
911401536646	SM378B S P12 927 PSD-E MB D100 G-TT PRO	Yes
911401536746	SM378B S P12 930 PSD-E MB D100 G-TT PRO	Yes
911401536846	SM378B S P12 940 PSD-E MB D100 G-TT PRO	Yes

Order Code	Full Product Name	CE mark
911401536946	SM378B S P12 927 PSD-E WB D100 G-TT PRO	Yes
911401537046	SM378B S P12 930 PSD-E WB D100 G-TT PRO	Yes
911401537146	SM378B S P12 940 PSD-E WB D100 G-TT PRO	Yes
911401537246	SM378B S P14 927 PSD-E NB D100 G-TT PRO	Yes
911401537346	SM378B S P14 930 PSD-E NB D100 G-TT PRO	Yes
911401537446	SM378B S P14 940 PSD-E NB D100 G-TT PRO	Yes
911401537546	SM378B S P14 927 PSD-E MB D100 G-TT PRO	Yes
911401537646	SM378B S P14 930 PSD-E MB D100 G-TT PRO	Yes
911401537746	SM378B S P14 940 PSD-E MB D100 G-TT PRO	Yes
911401537846	SM378B S P14 927 PSD-E WB D100 G-TT PRO	Yes
911401537946	SM378B S P14 930 PSD-E WB D100 G-TT PRO	Yes
911401538046	SM378B S P14 940 PSD-E WB D100 G-TT PRO	Yes
911401538146	SM378X S P8 930 WIA MB D100 G-TT PRO	Yes
911401538246	SM378X S P8 930 WIA WB D100 G-TT PRO	Yes
911401538346	SM378X S P12 930 WIA MB D100 G-TT PRO	Yes
911401538446	SM378X S P12 930 WIA WB D100 G-TT PRO	Yes
911401538546	SM378X S P14 930 WIA MB D100 G-TT PRO	Yes
911401538646	SM378X S P14 930 WIA WB D100 G-TT PRO	Yes
911401538746	SM378X S P20 930 WIA MB D100 G-TT PRO	Yes
911401538846	SM378X S P20 930 WIA WB D100 G-TT PRO	Yes
911401538946	SM378B S P9 PSD-TNW NB D100 G-TT PRO	No
911401539046	SM378B S P9 PSD-TNW MB D100 G-TT PRO	No
911401539146	SM378B S P9 PSD-TNW WB D100 G-TT PRO	No
911401539246	SM378B S P12 PSD-TNW NB D100 G-TT PRO	No
911401539346	SM378B S P12 PSD-TNW MB D100 G-TT PRO	No
911401539446	SM378B S P12 PSD-TNW WB D100 G-TT PRO	No
911401539546	SM378B S P15 PSD-TNW NB D100 G-TT PRO	No
911401539646	SM378B S P15 PSD-TNW MB D100 G-TT PRO	No
911401539746	SM378B S P15 PSD-TNW WB D100 G-TT PRO	No
911401539846	SM378B S P22 PSD-TNW NB D100 G-TT PRO	No
911401539946	SM378B S P22 PSD-TNW MB D100 G-TT PRO	No
911401540046	SM378B S P22 PSD-TNW WB D100 G-TT PRO	No
911401581147	RS378B P7 930 PSD VWB WP D55 M-WH PROCAU	No
911401581247	RS378B P7 930 PSD VWB D55 M-WH PROCAU	No
911401581547	RS378B P7 930 PSD MB WP D55 M-WH PROCAU	No
911401581647	RS378B P7 930 PSD MB D55 M-WH PROCAU	No
911401582547	RS378B P12 930 PSD VWB D100 G-TT PROCAU	No
911401582647	RS378B P12 930 PSD VWB WP D100G-TTPROCAU	No
911401582947	RS378B P12 930 PSD MB D100 G-TT PROCAU	No
911401583047	RS378B P12 930 PSD MB WP D100G-TTPROCAU	No
911401503046	RS378B P12 927 PSU-E NB M55 PRO	Yes
911401503146	RS378B P12 930 PSU-E NB M55 PRO	Yes

Order Code	Full Product Name	CE mark
911401503246	RS378B P12 940 PSU-E NB M55 PRO	Yes
911401503346	RS378B P12 927 PSU-E MB M55 PRO	Yes
911401503446	RS378B P12 930 PSU-E MB M55 PRO	Yes
911401503546	RS378B P12 940 PSU-E MB M55 PRO	Yes
911401503646	RS378B P12 927 PSU-E WB M55 PRO	Yes
911401503746	RS378B P12 930 PSU-E WB M55 PRO	Yes
911401503846	RS378B P12 940 PSU-E WB M55 PRO	Yes
911401503946	RS378B P14 927 PSU-E NB M55 PRO	Yes
911401504046	RS378B P14 930 PSU-E NB M55 PRO	Yes
911401504146	RS378B P14 940 PSU-E NB M55 PRO	Yes
911401504246	RS378B P14 927 PSU-E MB M55 PRO	Yes
911401504346	RS378B P14 930 PSU-E MB M55 PRO	Yes
911401504446	RS378B P14 940 PSU-E MB M55 PRO	Yes
911401504546	RS378B P14 927 PSU-E WB M55 PRO	Yes
911401504646	RS378B P14 930 PSU-E WB M55 PRO	Yes
911401504746	RS378B P14 940 PSU-E WB M55 PRO	Yes
911401506946	RS378B P13 927 PSD-E NB M55 PRO	Yes
911401507046	RS378B P13 930 PSD-E NB M55 PRO	Yes
911401507146	RS378B P13 940 PSD-E NB M55 PRO	Yes
911401507246	RS378B P13 927 PSD-E MB M55 PRO	Yes
911401507346	RS378B P13 930 PSD-E MB M55 PRO	Yes
911401507446	RS378B P13 940 PSD-E MB M55 PRO	Yes
911401507546	RS378B P13 927 PSD-E WB M55 PRO	Yes
911401507646	RS378B P13 930 PSD-E WB M55 PRO	Yes
911401507746	RS378B P13 940 PSD-E WB M55 PRO	Yes
911401507846	RS378B P15 927 PSD-E NB M55 PRO	Yes
911401507946	RS378B P15 930 PSD-E NB M55 PRO	Yes
911401508046	RS378B P15 940 PSD-E NB M55 PRO	Yes
911401508146	RS378B P15 927 PSD-E MB M55 PRO	Yes
911401508246	RS378B P15 930 PSD-E MB M55 PRO	Yes
911401508346	RS378B P15 940 PSD-E MB M55 PRO	Yes
911401508446	RS378B P15 927 PSD-E WB M55 PRO	Yes
911401508546	RS378B P15 930 PSD-E WB M55 PRO	Yes
911401508646	RS378B P15 940 PSD-E WB M55 PRO	Yes
911401508946	RS378X P12 930 WIA MB M55 PRO	Yes
911401509046	RS378X P12 930 WIA WB M55 PRO	Yes
911401509146	RS378X P14 930 WIA MB M55 PRO	Yes
911401509246	RS378X P14 930 WIA WB M55 PRO	Yes
911401509746	RS378B P12 930 PSU-E MB M55 WP PRO	Yes
911401509846	RS378B P12 930 PSU-E WB M55 WP PRO	Yes
911401509946	RS378B P14 930 PSU-E MB M55 WP PRO	Yes
911401510046	RS378B P14 930 PSU-E WB M55 WP PRO	Yes

Order Code	Full Product Name	CE mark
911401519546	RS378B P13 PSD-TNW NB M55 PRO	No
911401519646	RS378B P13 PSD-TNW MB M55 PRO	No
911401519746	RS378B P13 PSD-TNW WB M55 PRO	No
911401519846	RS378B P15 PSD-TNW NB M55 PRO	No
911401519946	RS378B P15 PSD-TNW MB M55 PRO	No
911401520046	RS378B P15 PSD-TNW WB M55 PRO	No
911401581947	RS378B P9 930 PSD VWB WP D75 M-WH PROCAU	No
911401582047	RS378B P9 930 PSD VWB D75 M-WH PROCAU	No
911401582347	RS378B P9 930 PSD MB WP D75 M-WH PROCAU	No
911401582447	RS378B P9 930 PSD MB D75 M-WH PROCAU	No

© 2026 Signify Holding. All rights reserved. The information provided herein is subject to change, without notice. Signify does not give any representation or warranty as to the accuracy or completeness of the information included herein and shall not be liable for any action in reliance thereon. The information presented in this document is not intended as any commercial offer and does not form part of any quotation or contract, unless otherwise agreed by Signify. Philips and the Philips Shield Emblem are registered trademarks of Koninklijke Philips N.V.