PHILIPS

GreenPerform Troffer

RC100B



Energy saving without compromise

GreenPerform troffer improves the compact design of the last generation with performance improvement and more variants for different markets.Integrating with all available system: POE, InterAct office wireless, InterAct Office Pro, ActiLume controller, GreenPerform troffer offers additional energy saving and connected features.

Benefits

- Upgrade to smart office with more options
- Energy saving
- Slim housing
- Comfortable light
- Good light quality
- Office compliant
- Reliable performance

Applications

- Open Office
- Public Area
- Meeting Room
- Training Room

Features

- Compatible with all available Philips systems
- Efficacy up to 125lm/W
- Slim design with height less than 46mm
- Improved optical design without zebra effect
- CRI > 80, SDCM<4, Flicker free
- UGR 19 available
- Lifetime L70 50,000 hours

Versions



GreenPerform Troffer RC100B 30x120



GreenPerform Troffer RC100B 60x60



GreenPerform-Troffer-product-picture



GreenPerform-Troffer-product-picture



GreenPerform Troffer RC100B 60x120

Dimensional drawing

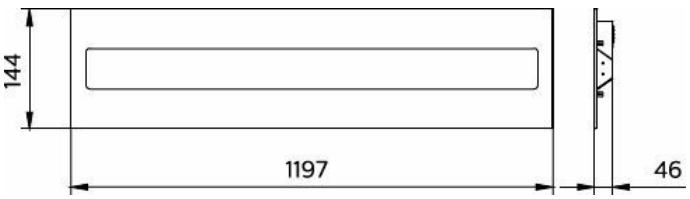

RC100B W30L120

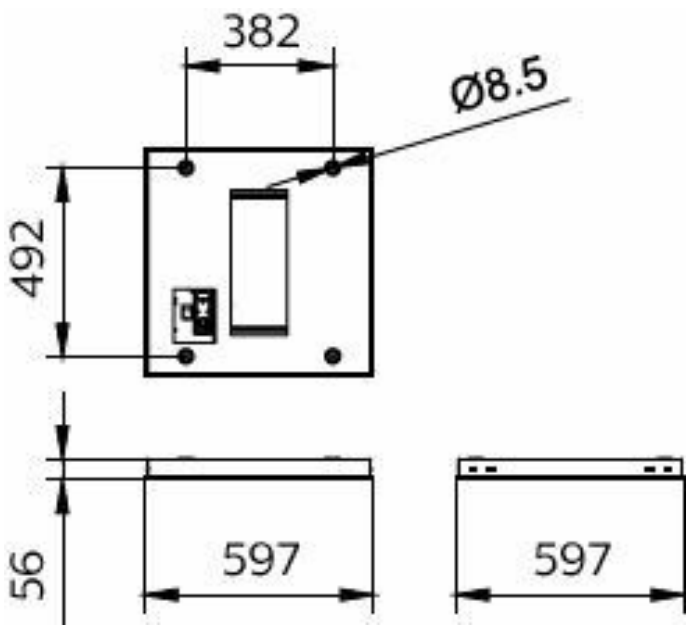

SM100C W60L60

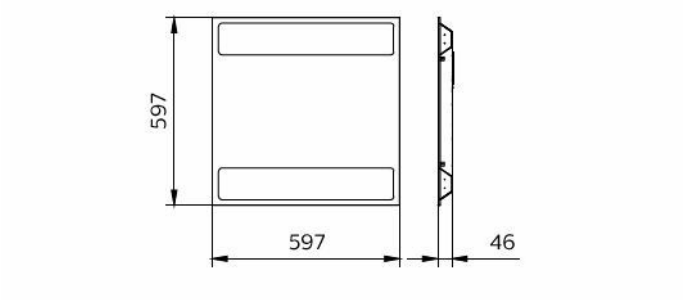

RC100B LED37S 840 W60L60 PSU CAU

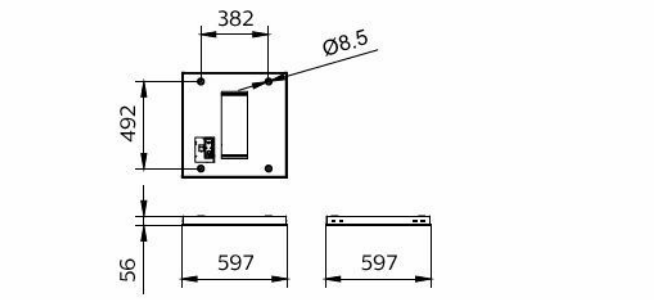

SM100C LED27S 840 W60L60 PSU G3

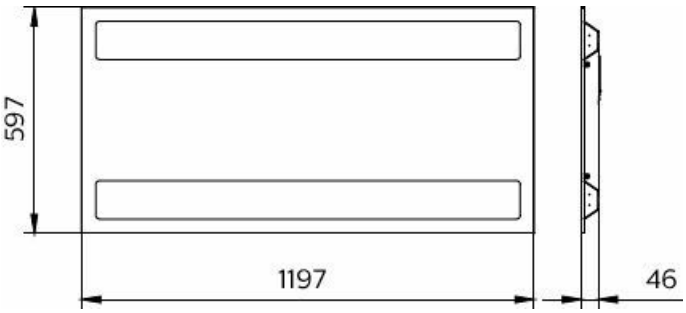

RC100B W60L120

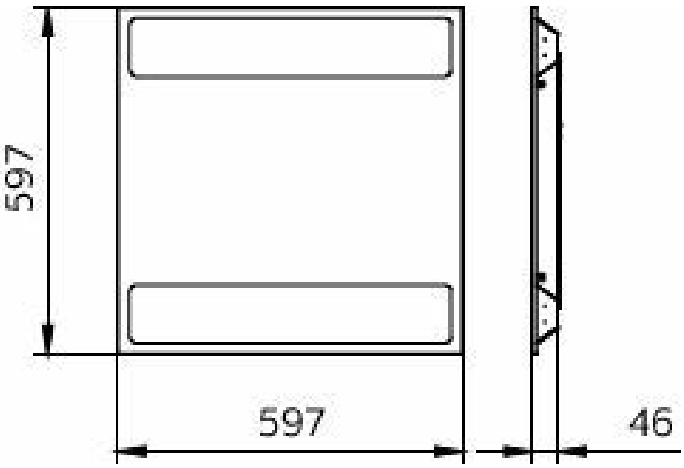

RC100 W60L60

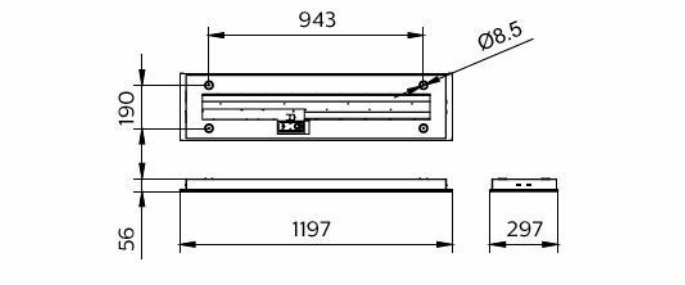

SM100C LED37S 840 W30L120 PSD G3

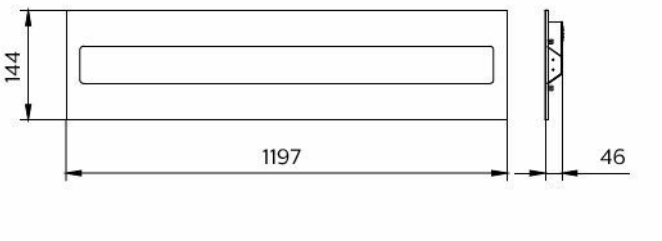

RC100B LED37S 840 W30L120 PSU G3

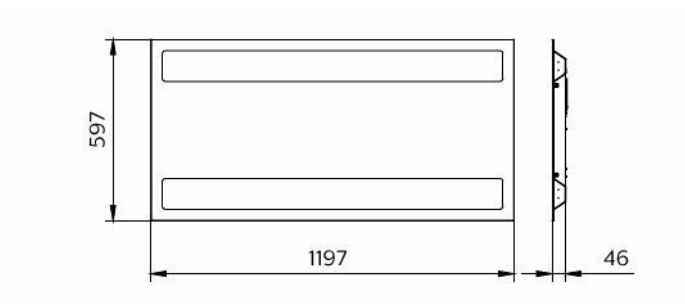

RC100B LED37S 840 W60L120 PSU CAU

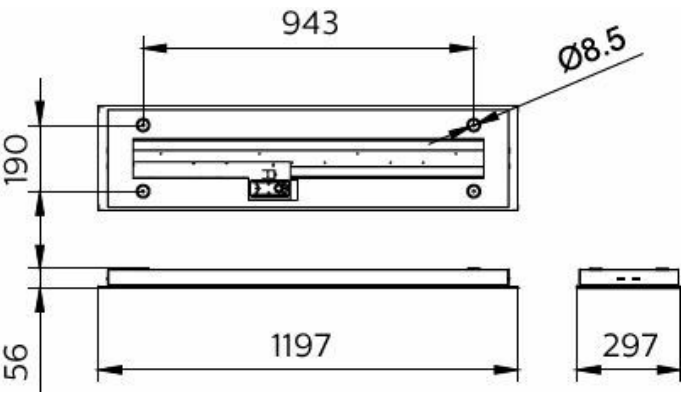

SM100C W30L120

General Information

Light source replaceable	No
Number of gear units	1 unit
Driver included	Yes
Service tag	Yes

Light Technical

Beam angle of light source	120 degree(s)
Optic type	Opal prismatic reflector

Operating and Electrical

Suitable for random switching	No
Protection class IEC	Safety class I

Mechanical and Housing

Housing Color	White
Ingress protection code	IP20 [Finger-protected]
Mech. impact protection code	IK03 [0.3 J]

Approval and Application

CE mark	Yes
ENEC mark	-
Ambient temperature range	-20 to +40 °C

Initial Performance (IEC Compliant)

Luminous flux tolerance	+/-10%
Initial chromaticity	SDCM<4

Light Technical

Order Code	Full Product Name	Luminous Flux	Correlated Color Temperature (Nom)	Luminous Efficacy (rated) (Nom)	Color rendering index (CRI)	Number of light sources
911401512547	RC100B LED37S 840 W30L120 PSU G3	4,000 lm	4000 K	155.03875968992247 lm/W	80	2
911401513051	RC100B LED37S 840 W30L120 PSD OC G3	3,700 lm	4000 K	121 lm/W	>90	-
911401513147	SM100C LED37S 840 W30L120 PSU G3	4,000 lm	4000 K	155.03875968992247 lm/W	80	2
911401513247	SM100C LED37S 840 W30L120 PSU G3	4,000 lm	4000 K	155.03875968992247 lm/W	80	2
911401513251	RC100B LED37S 840 W30L120 PSD G3	3,700 lm	4000 K	116 lm/W	>90	-
911401513351	RC100B LED37S 840 W30L120 PSU G3	3,700 lm	4000 K	116 lm/W	>90	-
911401513751	RC100B LED37S 865 W30L120 PSU UNV G3	3,700 lm	6500 K	116 lm/W	>90	-

Order Code	Full Product Name	Luminous Flux	Correlated Color Temperature (Nom)	Luminous Efficacy (rated) (Nom)	Color rendering index (CRI)	Number of light sources
911401513847	RC100B LED37S 840 W30L120 PSD OC G3	4,200 lm	4000 K	166.66666666666666 lm/W	80	2
911401513947	RC100B LED37S 840 W30L120 PSD G3	4,000 lm	4000 K	158.73015873015873 lm/W	80	2
911401514047	RC100B LED37S 840 W30L120 PSD CAU	4,000 lm	4000 K	158.73015873015873 lm/W	80	2
911401514347	SM100C LED37S 840 W30L120 PSD G3	4,000 lm	4000 K	158.73015873015873 lm/W	80	2
911401514747	RC100X LED37/840 W30L120 WIA	4,000 lm	4000 K	153.2567049808429 lm/W	80	2
911401516547	RC100X LED37S 840 W30L120 S15 G3 OC CAU	4,200 lm	4000 K	160.91954022988506 lm/W	80	2
911401519451	SM100C LED37S 840 W30L120 PSU G3	3,700 lm	4000 K	116 lm/W	>90	-
911401519551	SM100C LED37S 840 W30L120 PSD G3	3,700 lm	4000 K	116 lm/W	>90	-
911401519951	SM100C LED37S 865 W30L120 PSU UNV G3	3,700 lm	6500 K	116 lm/W	>80	-
911401508451	RC100B LED27S 840 W60L60 PSU G3	2,700 lm	4000 K	117 lm/W	>80	-
911401508651	RC100B LED27S 865 W60L60 PSU G3	2,700 lm	6500 K	117 lm/W	>90	-
911401509551	RC100B LED37S 840 W603L603 PSU UNV G3	3,700 lm	4000 K	116 lm/W	>80	-
911401509651	SM100C LED37S 840 W60L60 PSD G3	3,700 lm	4000 K	116 lm/W	>90	-
911401509951	SM100C LED27S 840 W60L60 PSU G3	2,700 lm	4000 K	117 lm/W	>90	-
911401510151	SM100C LED37S 840 W60L60 PSU G3	3,700 lm	4000 K	116 lm/W	>80	-
911401510751	RC100B LED37S 840 W60L60 PSU G3	3,700 lm	4000 K	116 lm/W	>90	-
911401510851	RC100B LED37S 840 W60L60 PSD OC G3	3,700 lm	4000 K	121 lm/W	>90	-
911401510951	RC100B LED37S 865 W60L60 PSU G3	3,700 lm	6500 K	116 lm/W	>80	-
911401511151	RC100B LED37S 840 W60L60 PSD G3	3,700 lm	4000 K	116 lm/W	>90	-
911401568841	RC100X LED37S 840 W60L60 IAR G3	3,700 lm	4000 K	119 lm/W	>90	-
911401514947	RC100X LED37S 940 W60L60 SIA S2 G3	3,800 lm	4000 K	145.59386973180077 lm/W	90	2
911401515047	RC100X LED37S 840 W60L60 SIA S2 G3	4,000 lm	4000 K	153.2567049808429 lm/W	80	2
911401515147	RC100X LED37S 865 W60L60 SIA S2 G3	4,000 lm	6500 K	153.2567049808429 lm/W	80	2
911401515247	RC100X LED37S 840 W60L60 SIA S15 G3	4,000 lm	4000 K	153.2567049808429 lm/W	80	2
911401515347	RC100X LED37S 865 W60L60 SIA S15 G3	4,000 lm	6500 K	153.2567049808429 lm/W	80	2
911401515447	RC100X LED37S 940 W60L60 SIA S15 G3	3,800 lm	4000 K	145.59386973180077 lm/W	90	2
911401515547	RC100X LED37S 940 W60L60 SIA S2 G3 CAU	3,800 lm	4000 K	145.59386973180077 lm/W	90	2
911401515647	RC100X LED37S 840 W60L60 SIA S2 G3 CAU	4,000 lm	4000 K	153.2567049808429 lm/W	80	2
911401515747	RC100X LED37S 865 W60L60 SIA S2 G3 CAU	4,000 lm	6500 K	153.2567049808429 lm/W	80	2
911401515847	RC100X LED37S 840 W60L60 SIA S15 G3 CAU	4,000 lm	4000 K	153.2567049808429 lm/W	80	2
911401515947	RC100X LED37S 865 W60L60 SIA S15 G3 CAU	4,000 lm	6500 K	153.2567049808429 lm/W	80	2
911401516047	RC100X LED37S 940 W60L60 SIA S15 G3 CAU	3,800 lm	4000 K	145.59386973180077 lm/W	90	2
911401516147	RC100X LED37S 840 W60L60 SIA S2 OC CAU	4,200 lm	4000 K	160.91954022988506 lm/W	80	2
911401511847	RC100B LED27S 840 W60L60 PSU G3	2,890 lm	4000 K	154.54545454545456 lm/W	80	2

Order Code	Full Product Name	Luminous Flux	Correlated Color Temperature (Nom)	Luminous Efficacy (rated) (Nom)	Color rendering index (CRI)	Number of light sources
911401511947	RC100B LED27S 865 W60L60 PSU G3	2,890 lm	6500 K	154.55 lm/W	80	2
911401512047	RC100B LED37S 840 W60L60 PSU G3	4,000 lm	4000 K	155.03875968992247 lm/W	80	2
911401512147	RC100B LED37S 865 W60L60 PSU G3	4,000 lm	6500 K	155.03875968992247 lm/W	80	2
911401512347	RC100B LED37S 840 W60L60 PSU CAU	4,000 lm	4000 K	155.03875968992247 lm/W	80	2
911401512447	RC100B LED37S 865 W60L60 PSU CAU	4,000 lm	6500 K	155.03875968992247 lm/W	80	2
911401512847	SM100C LED27S 840 W60L60 PSU G3	2,890 lm	4000 K	154.54545454545456 lm/W	80	2
911401512947	SM100C LED37S 840 W60L60 PSU G3	4,000 lm	4000 K	155.03875968992247 lm/W	80	2
911401513347	RC100B LED37S 840 W60L60 PSD G3	4,000 lm	4000 K	158.73015873015873 lm/W	80	2
911401513447	RC100B LED37S 865 W60L60 PSD G3	4,000 lm	6500 K	158.73015873015873 lm/W	80	2
911401513647	RC100B LED37S 840 W60L60 PSD OC G3	4,200 lm	4000 K	166.66666666666666 lm/W	80	2
911401513747	RC100B LED37S 865 W60L60 PSD OC G3	4,200 lm	6500 K	166.66666666666666 lm/W	80	2
911401514247	SM100C LED37S 840 W60L60 PSD G3	4,000 lm	4000 K	158.73015873015873 lm/W	80	2
911401514447	RC100X LED37/840 W60L60 WIA	4,000 lm	4000 K	153.2567049808429 lm/W	80	2
911401514547	RC100X LED37/865 W60L60 WIA	4,000 lm	6500 K	153.2567049808429 lm/W	80	2
911401514051	RC100B LED37S 840 W60L120 PSD OC CAU	3,700 lm	4000 K	129 lm/W	>90	-
911401514351	RC100B LED54S 840 W60L120 PSU G3	5,400 lm	4000 K	123 lm/W	>90	-
911401517247	RC100B LED54S 840 W60L120 PSD OC CAU	5,500 lm	4000 K	175.7188498402556 lm/W	80	4
911401517347	RC100B LED37S 840 W60L120 PSU CAU	3,480 lm	4000 K	158.1818181818182 lm/W	80	4
911401517447	RC100B LED54S 840 W60L120 PSU CAU	5,200 lm	4000 K	162.5 lm/W	80	4
911401517547	RC100B LED54S 840 W60L120 PSU G3	5,200 lm	4000 K	162.5 lm/W	80	4

Operating and Electrical

Order Code	Full Product Name	Input Voltage	Line Frequency	Power Consumption
911401512547	RC100B LED37S 840 W30L120 PSU G3	220 to 240 V	50 or 60 Hz	25.8 W
911401513051	RC100B LED37S 840 W30L120 PSD OC G3	220 to 240 V	50 to 60 Hz	32 W
911401513147	SM100C LED37S 840 W30L120 PSU G3	220 to 240 V	50 or 60 Hz	25.8 W
911401513247	SM100C LED37S 840 W30L120 PSU G3	220 to 240 V	50 or 60 Hz	25.8 W
911401513251	RC100B LED37S 840 W30L120 PSD G3	220 to 240 V	50 to 60 Hz	32 W
911401513351	RC100B LED37S 840 W30L120 PSU G3	220 to 240 V	50 to 60 Hz	32 W
911401513751	RC100B LED37S 865 W30L120 PSU UNV G3	110 to 277 V	50 to 60 Hz	32 W
911401513847	RC100B LED37S 840 W30L120 PSD OC G3	220 to 240 V	50 or 60 Hz	25.2 W
911401513947	RC100B LED37S 840 W30L120 PSD G3	220 to 240 V	50 or 60 Hz	25.2 W
911401514047	RC100B LED37S 840 W30L120 PSD CAU	220 to 240 V	50 or 60 Hz	25.2 W
911401514347	SM100C LED37S 840 W30L120 PSD G3	220 to 240 V	50 or 60 Hz	25.2 W
911401514747	RC100X LED37/840 W30L120 WIA	220 to 240 V	50 or 60 Hz	26.1 W
911401516547	RC100X LED37S 840 W30L120 S15 G3 OC CAU	220 to 240 V	50 or 60 Hz	26.1 W
911401519451	SM100C LED37S 840 W30L120 PSU G3	220 to 240 V	50 to 60 Hz	32 W
911401519551	SM100C LED37S 840 W30L120 PSD G3	220 to 240 V	50 to 60 Hz	32 W

Order Code	Full Product Name	Input Voltage	Line Frequency	Power Consumption
911401519951	SM100C LED37S 865 W30L120 PSU UNV G3	110 to 277 V	50 to 60 Hz	32 W
911401508451	RC100B LED27S 840 W60L60 PSU G3	220 to 240 V	50 to 60 Hz	23 W
911401508651	RC100B LED27S 865 W60L60 PSU G3	220 to 240 V	50 to 60 Hz	23 W
911401509551	RC100B LED37S 840 W603L603 PSU UNV G3	110 to 277 V	50 to 60 Hz	32 W
911401509651	SM100C LED37S 840 W60L60 PSD G3	220 to 240 V	50 to 60 Hz	32 W
911401509951	SM100C LED27S 840 W60L60 PSU G3	220 to 240 V	50 to 60 Hz	23 W
911401510151	SM100C LED37S 840 W60L60 PSU G3	220 to 240 V	50 to 60 Hz	32 W
911401510751	RC100B LED37S 840 W60L60 PSU G3	220 to 240 V	50 to 60 Hz	32 W
911401510851	RC100B LED37S 840 W60L60 PSD OC G3	220 to 240 V	50 to 60 Hz	32 W
911401510951	RC100B LED37S 865 W60L60 PSU G3	220 to 240 V	50 to 60 Hz	32 W
911401511151	RC100B LED37S 840 W60L60 PSD G3	220 to 240 V	50 to 60 Hz	32 W
911401568841	RC100X LED37S 840 W60L60 IAR G3	220 to 240 V	50 to 60 Hz	31 W
911401514947	RC100X LED37S 940 W60L60 SIA S2 G3	220 to 240 V	50 or 60 Hz	26.1 W
911401515047	RC100X LED37S 840 W60L60 SIA S2 G3	220 to 240 V	50 or 60 Hz	26.1 W
911401515147	RC100X LED37S 865 W60L60 SIA S2 G3	220 to 240 V	50 or 60 Hz	26.1 W
911401515247	RC100X LED37S 840 W60L60 SIA S15 G3	220 to 240 V	50 or 60 Hz	26.1 W
911401515347	RC100X LED37S 865 W60L60 SIA S15 G3	220 to 240 V	50 or 60 Hz	26.1 W
911401515447	RC100X LED37S 940 W60L60 SIA S15 G3	220 to 240 V	50 or 60 Hz	26.1 W
911401515547	RC100X LED37S 940 W60L60 SIA S2 G3 CAU	220 to 240 V	50 or 60 Hz	26.1 W
911401515647	RC100X LED37S 840 W60L60 SIA S2 G3 CAU	220 to 240 V	50 or 60 Hz	26.1 W
911401515747	RC100X LED37S 865 W60L60 SIA S2 G3 CAU	220 to 240 V	50 or 60 Hz	26.1 W
911401515847	RC100X LED37S 840 W60L60 SIA S15 G3 CAU	220 to 240 V	50 or 60 Hz	26.1 W
911401515947	RC100X LED37S 865 W60L60 SIA S15 G3 CAU	220 to 240 V	50 or 60 Hz	26.1 W
911401516047	RC100X LED37S 940 W60L60 SIA S15 G3 CAU	220 to 240 V	50 or 60 Hz	26.1 W
911401516147	RC100X LED37S 840 W60L60 SIA S2 OC CAU	220 to 240 V	50 or 60 Hz	26.1 W
911401511847	RC100B LED27S 840 W60L60 PSU G3	220 to 240 V	50 or 60 Hz	18.7 W
911401511947	RC100B LED27S 865 W60L60 PSU G3	220 to 240 V	50 or 60 Hz	18.7 W
911401512047	RC100B LED37S 840 W60L60 PSU G3	220 to 240 V	50 or 60 Hz	25.8 W
911401512147	RC100B LED37S 865 W60L60 PSU G3	220 to 240 V	50 or 60 Hz	25.8 W
911401512347	RC100B LED37S 840 W60L60 PSU CAU	220 to 240 V	50 or 60 Hz	25.8 W
911401512447	RC100B LED37S 865 W60L60 PSU CAU	220 to 240 V	50 or 60 Hz	25.8 W
911401512847	SM100C LED27S 840 W60L60 PSU G3	220 to 240 V	50 or 60 Hz	18.7 W
911401512947	SM100C LED37S 840 W60L60 PSU G3	220 to 240 V	50 or 60 Hz	25.8 W
911401513347	RC100B LED37S 840 W60L60 PSD G3	220 to 240 V	50 or 60 Hz	25.2 W
911401513447	RC100B LED37S 865 W60L60 PSD G3	220 to 240 V	50 or 60 Hz	25.2 W
911401513647	RC100B LED37S 840 W60L60 PSD OC G3	220 to 240 V	50 or 60 Hz	25.2 W
911401513747	RC100B LED37S 865 W60L60 PSD OC G3	220 to 240 V	50 or 60 Hz	25.2 W
911401514247	SM100C LED37S 840 W60L60 PSD G3	220 to 240 V	50 or 60 Hz	25.2 W
911401514447	RC100X LED37/840 W60L60 WIA	220 to 240 V	50 or 60 Hz	26.1 W
911401514547	RC100X LED37/865 W60L60 WIA	220 to 240 V	50 or 60 Hz	26.1 W
911401514051	RC100B LED37S 840 W60L120 PSD OC CAU	220 to 240 V	50 to 60 Hz	32 W
911401514351	RC100B LED54S 840 W60L120 PSU G3	220 to 240 V	50 to 60 Hz	44 W

Order Code	Full Product Name	Input Voltage	Line Frequency	Power Consumption
911401517247	RC100B LED54S 840 W60L120 PSD OC CAU	220 to 240 V	50 or 60 Hz	31.3 W
911401517347	RC100B LED37S 840 W60L120 PSU CAU	220 to 240 V	50 or 60 Hz	22 W
911401517447	RC100B LED54S 840 W60L120 PSU CAU	220 to 240 V	50 or 60 Hz	32 W
911401517547	RC100B LED54S 840 W60L120 PSU G3	220 to 240 V	50 or 60 Hz	32 W

Controls and Dimming

Order Code	Full Product Name	Dimmable
911401512547	RC100B LED37S 840 W30L120 PSU G3	-
911401513051	RC100B LED37S 840 W30L120 PSD OC G3	Yes
911401513147	SM100C LED37S 840 W30L120 PSU G3	-
911401513247	SM100C LED37S 840 W30L120 PSU G3	-
911401513251	RC100B LED37S 840 W30L120 PSD G3	Yes
911401513351	RC100B LED37S 840 W30L120 PSU G3	No
911401513751	RC100B LED37S 865 W30L120 PSU UNV G3	No
911401513847	RC100B LED37S 840 W30L120 PSD OC G3	DALI
911401513947	RC100B LED37S 840 W30L120 PSD G3	DALI
911401514047	RC100B LED37S 840 W30L120 PSD CAU	DALI
911401514347	SM100C LED37S 840 W30L120 PSD G3	DALI
911401514747	RC100X LED37/840 W30L120 WIA	Wireless Dim
911401516547	RC100X LED37S 840 W30L120 S15 G3 OC CAU	Wireless Dim
911401519451	SM100C LED37S 840 W30L120 PSU G3	No
911401519551	SM100C LED37S 840 W30L120 PSD G3	Yes
911401519951	SM100C LED37S 865 W30L120 PSU UNV G3	No
911401508451	RC100B LED27S 840 W60L60 PSU G3	No
911401508651	RC100B LED27S 865 W60L60 PSU G3	No
911401509551	RC100B LED37S 840 W603L603 PSU UNV G3	No
911401509651	SM100C LED37S 840 W60L60 PSD G3	Yes
911401509951	SM100C LED27S 840 W60L60 PSU G3	No
911401510151	SM100C LED37S 840 W60L60 PSU G3	No
911401510751	RC100B LED37S 840 W60L60 PSU G3	No
911401510851	RC100B LED37S 840 W60L60 PSD OC G3	Yes
911401510951	RC100B LED37S 865 W60L60 PSU G3	No
911401511151	RC100B LED37S 840 W60L60 PSD G3	Yes
911401568841	RC100X LED37S 840 W60L60 IAR G3	Yes
911401514947	RC100X LED37S 940 W60L60 SIA S2 G3	Wireless Dim
911401515047	RC100X LED37S 840 W60L60 SIA S2 G3	Wireless Dim
911401515147	RC100X LED37S 865 W60L60 SIA S2 G3	Wireless Dim
911401515247	RC100X LED37S 840 W60L60 SIA S15 G3	Wireless Dim
911401515347	RC100X LED37S 865 W60L60 SIA S15 G3	Wireless Dim
911401515447	RC100X LED37S 940 W60L60 SIA S15 G3	Wireless Dim
911401515547	RC100X LED37S 940 W60L60 SIA S2 G3 CAU	Wireless Dim
911401515647	RC100X LED37S 840 W60L60 SIA S2 G3 CAU	Wireless Dim

Order Code	Full Product Name	Dimmable
911401515747	RC100X LED37S 865 W60L60 SIA S2 G3 CAU	Wireless Dim
911401515847	RC100X LED37S 840 W60L60 SIA S15 G3 CAU	Wireless Dim
911401515947	RC100X LED37S 865 W60L60 SIA S15 G3 CAU	Wireless Dim
911401516047	RC100X LED37S 940 W60L60 SIA S15 G3 CAU	Wireless Dim
911401516147	RC100X LED37S 840 W60L60 SIA S2 OC CAU	Wireless Dim
911401511847	RC100B LED27S 840 W60L60 PSU G3	-
911401511947	RC100B LED27S 865 W60L60 PSU G3	-
911401512047	RC100B LED37S 840 W60L60 PSU G3	-
911401512147	RC100B LED37S 865 W60L60 PSU G3	-
911401512347	RC100B LED37S 840 W60L60 PSU CAU	-
911401512447	RC100B LED37S 865 W60L60 PSU CAU	-
911401512847	SM100C LED27S 840 W60L60 PSU G3	-
911401512947	SM100C LED37S 840 W60L60 PSU G3	-
911401513347	RC100B LED37S 840 W60L60 PSD G3	DALI
911401513447	RC100B LED37S 865 W60L60 PSD G3	DALI
911401513647	RC100B LED37S 840 W60L60 PSD OC G3	DALI
911401513747	RC100B LED37S 865 W60L60 PSD OC G3	DALI
911401514247	SM100C LED37S 840 W60L60 PSD G3	DALI
911401514447	RC100X LED37/840 W60L60 WIA	Wireless Dim
911401514547	RC100X LED37/865 W60L60 WIA	Wireless Dim
911401514051	RC100B LED37S 840 W60L120 PSD OC CAU	Yes
911401514351	RC100B LED54S 840 W60L120 PSU G3	No
911401517247	RC100B LED54S 840 W60L120 PSD OC CAU	DALI
911401517347	RC100B LED37S 840 W60L120 PSU CAU	-
911401517447	RC100B LED54S 840 W60L120 PSU CAU	-
911401517547	RC100B LED54S 840 W60L120 PSU G3	-

Mechanical and Housing

Order Code	Full Product Name	Optical cover type
911401512547	RC100B LED37S 840 W30L120 PSU G3	Polycarbonate bowl/cover
911401513051	RC100B LED37S 840 W30L120 PSD OC G3	Variable linear-lens array in polycarbonate cover
911401513147	SM100C LED37S 840 W30L120 PSU G3	Polycarbonate bowl/cover
911401513247	SM100C LED37S 840 W30L120 PSU G3	Polycarbonate bowl/cover
911401513251	RC100B LED37S 840 W30L120 PSD G3	Variable linear-lens array in polycarbonate cover
911401513351	RC100B LED37S 840 W30L120 PSU G3	Variable linear-lens array in polycarbonate cover
911401513751	RC100B LED37S 865 W30L120 PSU UNV G3	Variable linear-lens array in polycarbonate cover
911401513847	RC100B LED37S 840 W30L120 PSD OC G3	Polycarbonate bowl/cover
911401513947	RC100B LED37S 840 W30L120 PSD G3	Polycarbonate bowl/cover
911401514047	RC100B LED37S 840 W30L120 PSD CAU	Polycarbonate bowl/cover
911401514347	SM100C LED37S 840 W30L120 PSD G3	Polycarbonate bowl/cover
911401514747	RC100X LED37/840 W30L120 WIA	Polycarbonate bowl/cover
911401516547	RC100X LED37S 840 W30L120 S15 G3 OC CAU	Polycarbonate bowl/cover

Order Code	Full Product Name	Optical cover type
911401519451	SM100C LED37S 840 W30L120 PSU G3	Variable linear-lens array in polycarbonate cover
911401519551	SM100C LED37S 840 W30L120 PSD G3	Variable linear-lens array in polycarbonate cover
911401519951	SM100C LED37S 865 W30L120 PSU UNV G3	Variable linear-lens array in polycarbonate cover
911401508451	RC100B LED27S 840 W60L60 PSU G3	Variable linear-lens array in polycarbonate cover
911401508651	RC100B LED27S 865 W60L60 PSU G3	Variable linear-lens array in polycarbonate cover
911401509551	RC100B LED37S 840 W603L603 PSU UNV G3	Variable linear-lens array in polycarbonate cover
911401509651	SM100C LED37S 840 W60L60 PSD G3	Variable linear-lens array in polycarbonate cover
911401509951	SM100C LED27S 840 W60L60 PSU G3	Variable linear-lens array in polycarbonate cover
911401510151	SM100C LED37S 840 W60L60 PSU G3	Variable linear-lens array in polycarbonate cover
911401510751	RC100B LED37S 840 W60L60 PSU G3	Variable linear-lens array in polycarbonate cover
911401510851	RC100B LED37S 840 W60L60 PSD OC G3	Variable linear-lens array in polycarbonate cover
911401510951	RC100B LED37S 865 W60L60 PSU G3	Variable linear-lens array in polycarbonate cover
911401511151	RC100B LED37S 840 W60L60 PSD G3	Variable linear-lens array in polycarbonate cover
911401568841	RC100X LED37S 840 W60L60 IAR G3	Variable linear-lens array in polycarbonate cover
911401514947	RC100X LED37S 940 W60L60 SIA S2 G3	Polycarbonate bowl/cover
911401515047	RC100X LED37S 840 W60L60 SIA S2 G3	Polycarbonate bowl/cover
911401515147	RC100X LED37S 865 W60L60 SIA S2 G3	Polycarbonate bowl/cover
911401515247	RC100X LED37S 840 W60L60 SIA S15 G3	Polycarbonate bowl/cover
911401515347	RC100X LED37S 865 W60L60 SIA S15 G3	Polycarbonate bowl/cover
911401515447	RC100X LED37S 940 W60L60 SIA S15 G3	Polycarbonate bowl/cover
911401515547	RC100X LED37S 940 W60L60 SIA S2 G3 CAU	Polycarbonate bowl/cover
911401515647	RC100X LED37S 840 W60L60 SIA S2 G3 CAU	Polycarbonate bowl/cover
911401515747	RC100X LED37S 865 W60L60 SIA S2 G3 CAU	Polycarbonate bowl/cover
911401515847	RC100X LED37S 840 W60L60 SIA S15 G3 CAU	Polycarbonate bowl/cover
911401515947	RC100X LED37S 865 W60L60 SIA S15 G3 CAU	Polycarbonate bowl/cover
911401516047	RC100X LED37S 940 W60L60 SIA S15 G3 CAU	Polycarbonate bowl/cover
911401516147	RC100X LED37S 840 W60L60 SIA S2 OC CAU	Polycarbonate bowl/cover
911401511847	RC100B LED27S 840 W60L60 PSU G3	Polycarbonate bowl/cover
911401511947	RC100B LED27S 865 W60L60 PSU G3	Polycarbonate bowl/cover
911401512047	RC100B LED37S 840 W60L60 PSU G3	Polycarbonate bowl/cover
911401512147	RC100B LED37S 865 W60L60 PSU G3	Polycarbonate bowl/cover
911401512347	RC100B LED37S 840 W60L60 PSU CAU	Polycarbonate bowl/cover
911401512447	RC100B LED37S 865 W60L60 PSU CAU	Polycarbonate bowl/cover
911401512847	SM100C LED27S 840 W60L60 PSU G3	Polycarbonate bowl/cover
911401512947	SM100C LED37S 840 W60L60 PSU G3	Polycarbonate bowl/cover
911401513347	RC100B LED37S 840 W60L60 PSD G3	Polycarbonate bowl/cover
911401513447	RC100B LED37S 865 W60L60 PSD G3	Polycarbonate bowl/cover
911401513647	RC100B LED37S 840 W60L60 PSD OC G3	Polycarbonate bowl/cover
911401513747	RC100B LED37S 865 W60L60 PSD OC G3	Polycarbonate bowl/cover
911401514247	SM100C LED37S 840 W60L60 PSD G3	Polycarbonate bowl/cover
911401514447	RC100X LED37/840 W60L60 WIA	Polycarbonate bowl/cover
911401514547	RC100X LED37/865 W60L60 WIA	Polycarbonate bowl/cover

Order Code	Full Product Name	Optical cover type
911401514051	RC100B LED37S 840 W60L120 PSD OC CAU	Variable linear-lens array in polycarbonate cover
911401514351	RC100B LED54S 840 W60L120 PSU G3	Variable linear-lens array in polycarbonate cover
911401517247	RC100B LED54S 840 W60L120 PSD OC CAU	Polycarbonate bowl/cover
911401517347	RC100B LED37S 840 W60L120 PSU CAU	Polycarbonate bowl/cover
911401517447	RC100B LED54S 840 W60L120 PSU CAU	Polycarbonate bowl/cover
911401517547	RC100B LED54S 840 W60L120 PSU G3	Polycarbonate bowl/cover

Approval and Application

Order Code	Full Product Name	Glow-wire test	Flammability mark
911401512547	RC100B LED37S 840 W30L120 PSU G3	Temperature 650 °C, duration 30 s	-
911401513051	RC100B LED37S 840 W30L120 PSD OC G3	Temperature 600 °C, duration 30 s	For mounting on normally flammable surfaces
911401513147	SM100C LED37S 840 W30L120 PSU G3	Temperature 650 °C, duration 30 s	-
911401513247	SM100C LED37S 840 W30L120 PSU G3	Temperature 650 °C, duration 30 s	-
911401513251	RC100B LED37S 840 W30L120 PSD G3	Temperature 600 °C, duration 30 s	For mounting on normally flammable surfaces
911401513351	RC100B LED37S 840 W30L120 PSU G3	Temperature 600 °C, duration 30 s	For mounting on normally flammable surfaces
911401513751	RC100B LED37S 865 W30L120 PSU UNV G3	Temperature 600 °C, duration 30 s	For mounting on normally flammable surfaces
911401513847	RC100B LED37S 840 W30L120 PSD OC G3	Temperature 650 °C, duration 30 s	-
911401513947	RC100B LED37S 840 W30L120 PSD G3	Temperature 650 °C, duration 30 s	-
911401514047	RC100B LED37S 840 W30L120 PSD CAU	Temperature 650 °C, duration 30 s	-
911401514347	SM100C LED37S 840 W30L120 PSD G3	Temperature 650 °C, duration 30 s	-
911401514747	RC100X LED37/840 W30L120 WIA	Temperature 650 °C, duration 30 s	-
911401516547	RC100X LED37S 840 W30L120 S15 G3 OC CAU	Temperature 650 °C, duration 30 s	-
911401519451	SM100C LED37S 840 W30L120 PSU G3	Temperature 600 °C, duration 30 s	For mounting on normally flammable surfaces
911401519551	SM100C LED37S 840 W30L120 PSD G3	Temperature 600 °C, duration 30 s	For mounting on normally flammable surfaces
911401519951	SM100C LED37S 865 W30L120 PSU UNV G3	Temperature 600 °C, duration 30 s	For mounting on normally flammable surfaces
911401508451	RC100B LED27S 840 W60L60 PSU G3	Temperature 600 °C, duration 30 s	For mounting on normally flammable surfaces
911401508651	RC100B LED27S 865 W60L60 PSU G3	Temperature 600 °C, duration 30 s	For mounting on normally flammable surfaces
911401509551	RC100B LED37S 840 W603L603 PSU UNV G3	Temperature 600 °C, duration 30 s	For mounting on normally flammable surfaces
911401509651	SM100C LED37S 840 W60L60 PSD G3	Temperature 600 °C, duration 30 s	For mounting on normally flammable surfaces
911401509951	SM100C LED27S 840 W60L60 PSU G3	Temperature 600 °C, duration 30 s	For mounting on normally flammable surfaces
911401510151	SM100C LED37S 840 W60L60 PSU G3	Temperature 600 °C, duration 30 s	For mounting on normally flammable surfaces
911401510751	RC100B LED37S 840 W60L60 PSU G3	Temperature 600 °C, duration 30 s	For mounting on normally flammable surfaces
911401510851	RC100B LED37S 840 W60L60 PSD OC G3	Temperature 600 °C, duration 30 s	For mounting on normally flammable surfaces
911401510951	RC100B LED37S 865 W60L60 PSU G3	Temperature 600 °C, duration 30 s	For mounting on normally flammable surfaces
911401511151	RC100B LED37S 840 W60L60 PSD G3	Temperature 600 °C, duration 30 s	For mounting on normally flammable surfaces
911401568841	RC100X LED37S 840 W60L60 IAR G3	Temperature 600 °C, duration 30 s	For mounting on normally flammable surfaces
911401514947	RC100X LED37S 940 W60L60 SIA S2 G3	Temperature 650 °C, duration 30 s	-
911401515047	RC100X LED37S 840 W60L60 SIA S2 G3	Temperature 650 °C, duration 30 s	-
911401515147	RC100X LED37S 865 W60L60 SIA S2 G3	Temperature 650 °C, duration 30 s	-
911401515247	RC100X LED37S 840 W60L60 SIA S15 G3	Temperature 650 °C, duration 30 s	-
911401515347	RC100X LED37S 865 W60L60 SIA S15 G3	Temperature 650 °C, duration 30 s	-
911401515447	RC100X LED37S 940 W60L60 SIA S15 G3	Temperature 650 °C, duration 30 s	-

Order Code	Full Product Name	Glow-wire test	Flammability mark
911401515547	RC100X LED37S 940 W60L60 SIA S2 G3 CAU	Temperature 650 °C, duration 30 s	-
911401515647	RC100X LED37S 840 W60L60 SIA S2 G3 CAU	Temperature 650 °C, duration 30 s	-
911401515747	RC100X LED37S 865 W60L60 SIA S2 G3 CAU	Temperature 650 °C, duration 30 s	-
911401515847	RC100X LED37S 840 W60L60 SIA S15 G3 CAU	Temperature 650 °C, duration 30 s	-
911401515947	RC100X LED37S 865 W60L60 SIA S15 G3 CAU	Temperature 650 °C, duration 30 s	-
911401516047	RC100X LED37S 940 W60L60 SIA S15 G3 CAU	Temperature 650 °C, duration 30 s	-
911401516147	RC100X LED37S 840 W60L60 SIA S2 OC CAU	Temperature 650 °C, duration 30 s	-
911401511847	RC100B LED27S 840 W60L60 PSU G3	Temperature 650 °C, duration 30 s	-
911401511947	RC100B LED27S 865 W60L60 PSU G3	Temperature 650 °C, duration 30 s	-
911401512047	RC100B LED37S 840 W60L60 PSU G3	Temperature 650 °C, duration 30 s	-
911401512147	RC100B LED37S 865 W60L60 PSU G3	Temperature 650 °C, duration 30 s	-
911401512347	RC100B LED37S 840 W60L60 PSU CAU	Temperature 650 °C, duration 30 s	-
911401512447	RC100B LED37S 865 W60L60 PSU CAU	Temperature 650 °C, duration 30 s	-
911401512847	SM100C LED27S 840 W60L60 PSU G3	Temperature 650 °C, duration 30 s	-
911401512947	SM100C LED37S 840 W60L60 PSU G3	Temperature 650 °C, duration 30 s	-
911401513347	RC100B LED37S 840 W60L60 PSD G3	Temperature 650 °C, duration 30 s	-
911401513447	RC100B LED37S 865 W60L60 PSD G3	Temperature 650 °C, duration 30 s	-
911401513647	RC100B LED37S 840 W60L60 PSD OC G3	Temperature 650 °C, duration 30 s	-
911401513747	RC100B LED37S 865 W60L60 PSD OC G3	Temperature 650 °C, duration 30 s	-
911401514247	SM100C LED37S 840 W60L60 PSD G3	Temperature 650 °C, duration 30 s	-
911401514447	RC100X LED37/840 W60L60 WIA	Temperature 650 °C, duration 30 s	-
911401514547	RC100X LED37/865 W60L60 WIA	Temperature 650 °C, duration 30 s	-
911401514051	RC100B LED37S 840 W60L120 PSD OC CAU	Temperature 600 °C, duration 30 s	For mounting on normally flammable surfaces
911401514351	RC100B LED54S 840 W60L120 PSU G3	Temperature 600 °C, duration 30 s	For mounting on normally flammable surfaces
911401517247	RC100B LED54S 840 W60L120 PSD OC CAU	Temperature 650 °C, duration 30 s	-
911401517347	RC100B LED37S 840 W60L120 PSU CAU	Temperature 650 °C, duration 30 s	-
911401517447	RC100B LED54S 840 W60L120 PSU CAU	Temperature 650 °C, duration 30 s	-
911401517547	RC100B LED54S 840 W60L120 PSU G3	Temperature 650 °C, duration 30 s	-

© 2026 Signify Holding. All rights reserved. The information provided herein is subject to change, without notice. Signify does not give any representation or warranty as to the accuracy or completeness of the information included herein and shall not be liable for any action in reliance thereon. The information presented in this document is not intended as any commercial offer and does not form part of any quotation or contract, unless otherwise agreed by Signify. Philips and the Philips Shield Emblem are registered trademarks of Koninklijke Philips N.V.