PHILIPS

Ledinaire Batten

BN060C



Proven quality. Effortless installation. Every time. Your dependable and affordable choice for every job

The Ledinaire batten (BN021C) range contains a selection of popular off-the-shelf batten LED luminaires that comes with the high Philips quality levels at a competitive price. Reliable, energy efficient and affordable. Ledinaire enables, simple and flexible installation, with light-line creation possibility.

Benefits

- Philips quality and reliability
- Energy saving
- Compact design
- Easy and flexible installation, with line connection possibility

Applications

- General lighting
- Storage rooms
- Cove lighting

Features

- Light line up to ten battens
- Mounting accessories included

- Available in from 30cm to 1.8m length
- 2 CCT: 3000K, 4000K

Versions

Ledinaire batten, BN021C,

Ledinaire batten, BN021C,

Dimensional drawing

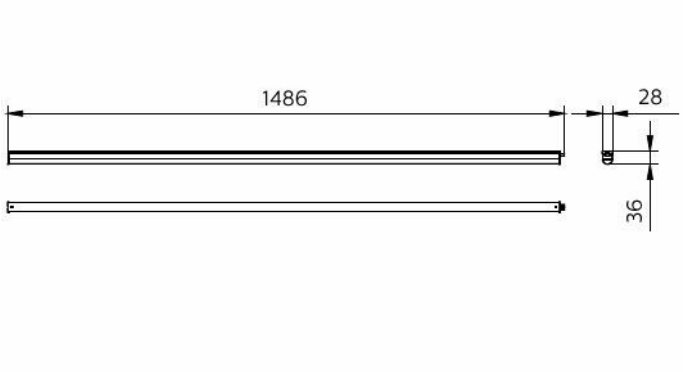

840 neutral white

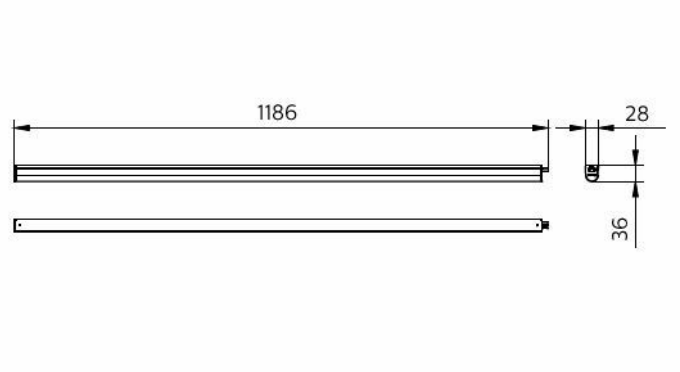

830 warm white

BN021C LED15S/840 L900

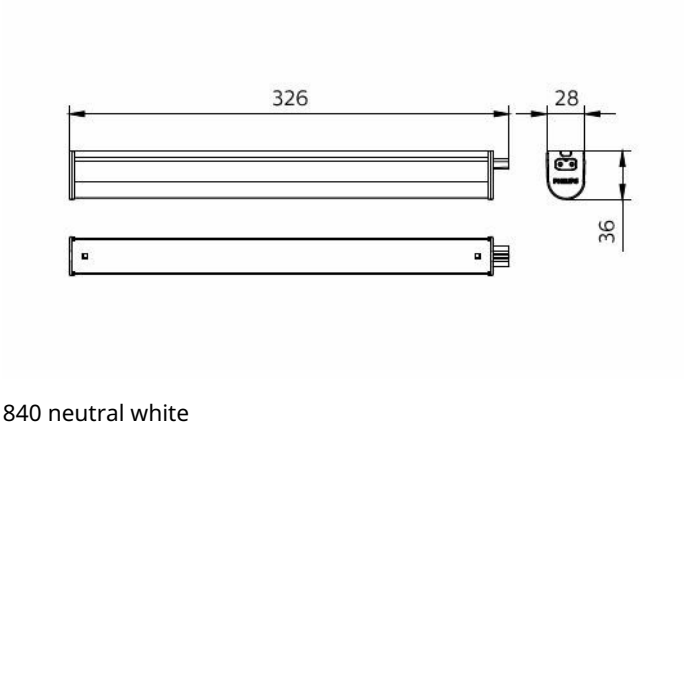

840 neutral white

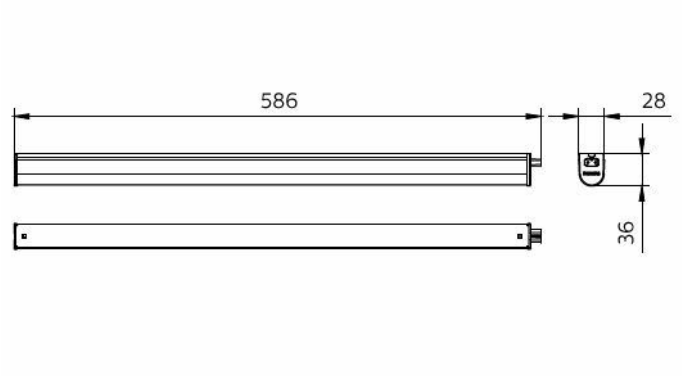

BN021C LED10S/840 L600 CFW

Product details

Ledinaire batten, BN021C, Connection



Ledinaire batten, BN021C, Accessories included



Ledinaire batten, BN021C, Light-line via connection cable

Ledinaire batten, BN021C, Light-line pin-to-pin

Ledinaire batten, BN021C, Light-line pin-to-pin

General Information

Light source replaceable	No
Number of gear units	1 unit
Driver included	Yes
Service tag	No

Light Technical

Color rendering index (CRI)	>80
Beam angle of light source	140 degree(s)

Operating and Electrical

Input Voltage	220 to 240 V
Line Frequency	50 or 60 Hz
Suitable for random switching	Yes
Protection class IEC	Safety class II

Controls and Dimming

Dimmable	No
Maximum dim level	Not applicable

Mechanical and Housing

Housing Color	White
Ingress protection code	IP20 [Finger-protected]
Mech. impact protection code	IK02 [0.2 J standard]

Emergency Operation

Central Emergency	No

Approval and Application

Glow-wire test	Temperature 650 °C, duration 30 s
Flammability mark	For mounting on normally flammable surfaces
CE mark	Yes
ENEC mark	-
Ambient temperature range	-20 to +40 °C

Light Technical

Order Code	Full Product Name	Luminous Flux	Correlated Color Temperature (Nom)	Luminous Efficacy (rated) (Nom)	Optic type
911401805887	BN021C LED20S/840 L1200 CFW	2,000 lm	4000 K	105 lm/W	Opal
911401842382	BN021C LED20S/840 L1200	2,100 lm	4000 K	105 lm/W	Very wide beam
911401842482	BN021C LED19S/830 L1200	1,900 lm	3000 K	95 lm/W	Very wide beam
911401842582	BN021C LED25S/840 L1500	2,600 lm	4000 K	108 lm/W	Very wide beam
911401842682	BN021C LED24S/830 L1500	2,400 lm	3000 K	100 lm/W	Very wide beam
911401805787	BN021C LED10S/840 L600 CFW	1,000 lm	4000 K	105 lm/W	Opal
911401841782	BN021C LED5S/840 L300	500 lm	4000 K	108 lm/W	Very wide beam
911401841882	BN021C LED5S/830 L300	480 lm	3000 K	96 lm/W	Very wide beam
911401841982	BN021C LED10S/840 L600	1,050 lm	4000 K	105 lm/W	Very wide beam
911401842082	BN021C LED10S/830 L600	960 lm	3000 K	96 lm/W	Very wide beam
911401842182	BN021C LED15S/840 L900	1,600 lm	4000 K	107 lm/W	Very wide beam
911401842282	BN021C LED14S/830 L900	1,450 lm	3000 K	97 lm/W	Very wide beam

Operating and Electrical

Order Code	Full Product Name	Power Consumption
911401805887	BN021C LED20S/840 L1200 CFW	20 W
911401842382	BN021C LED20S/840 L1200	20 W
911401842482	BN021C LED19S/830 L1200	20 W
911401842582	BN021C LED25S/840 L1500	24 W
911401842682	BN021C LED24S/830 L1500	24 W
911401805787	BN021C LED10S/840 L600 CFW	10 W
911401841782	BN021C LED5S/840 L300	5 W
911401841882	BN021C LED5S/830 L300	5 W
911401841982	BN021C LED10S/840 L600	10 W
911401842082	BN021C LED10S/830 L600	10 W
911401842182	BN021C LED15S/840 L900	15 W
911401842282	BN021C LED14S/830 L900	15 W

Initial Performance (IEC Compliant)

Order Code	Full Product Name	Luminous flux tolerance	Initial chromaticity
911401805887	BN021C LED20S/840 L1200 CFW	-10% / +10%	(0.38, 0.38) SDCM ≤5
911401842382	BN021C LED20S/840 L1200	+/-10%	0.38, 0.38, SDCM≤5
911401842482	BN021C LED19S/830 L1200	+/-10%	0.43, 0.40, SDCM≤5
911401842582	BN021C LED25S/840 L1500	+/-10%	0.38, 0.38, SDCM≤5
911401842682	BN021C LED24S/830 L1500	+/-10%	0.43, 0.40, SDCM≤5
911401805787	BN021C LED10S/840 L600 CFW	-10% / +10%	(0.38, 0.38) SDCM ≤5
911401841782	BN021C LED5S/840 L300	+/-10%	0.38, 0.38, SDCM≤5
911401841882	BN021C LED5S/830 L300	+/-10%	0.43, 0.40, SDCM≤5
911401841982	BN021C LED10S/840 L600	+/-10%	0.38, 0.38, SDCM≤5
911401842082	BN021C LED10S/830 L600	+/-10%	0.43, 0.40, SDCM≤5
911401842182	BN021C LED15S/840 L900	+/-10%	0.38, 0.38, SDCM≤5
911401842282	BN021C LED14S/830 L900	+/-10%	0.43, 0.40, SDCM≤5

© 2026 Signify Holding. All rights reserved. The information provided herein is subject to change, without notice. Signify does not give any representation or warranty as to the accuracy or completeness of the information included herein and shall not be liable for any action in reliance thereon. The information presented in this document is not intended as any commercial offer and does not form part of any quotation or contract, unless otherwise agreed by Signify. Philips and the Philips Shield Emblem are registered trademarks of Koninklijke Philips N.V.