PHILIPS

HID-High Power ballasts for HPL and HPI lamps

DHPHPL



Simple, robust magnetic ballast

The HID High-Power ballast is an impregnated (HID standard) electromagnetic copper/iron ballast for use with an external ignitor for HID lamps.

Benefits

- Limited volume of ballast coil; also lightweight
- Simple installation and cabling

Applications

- For use with HPL, HPI and HPI (PLUS) lamps in industry, floor, public, area and road lighting
- HID-Basic ballasts should be restricted to built-in situations where relative humidity is limited.

Features

- Orthocyclic winding process
- Ballasts equipped with screw terminal blocks as standard
- Earthing-while-mounting facility (HID Standard ballasts)
- Low watt losses

Versions



GPPR_HPHPL-Product photo

Dimensional drawing

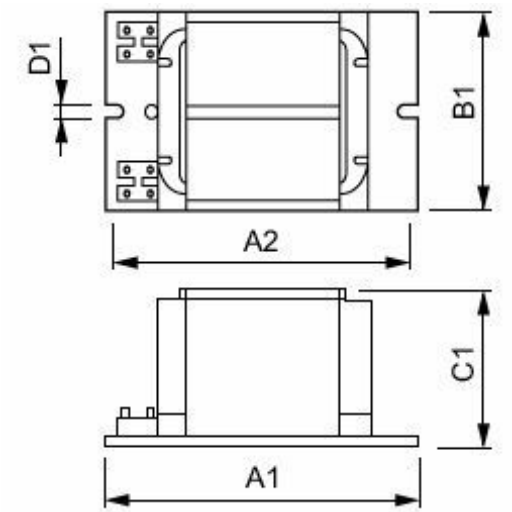

Product	D1	C1	A1	A2
BHL 1000L 202	7 mm	102.0 mm	165 mm	123 mm

Operating and Electrical

Input Voltage	230 V
Line Frequency	50 Hz
Input Frequency	50 Hz

© 2026 Signify Holding. All rights reserved. The information provided herein is subject to change, without notice. Signify does not give any representation or warranty as to the accuracy or completeness of the information included herein and shall not be liable for any action in reliance thereon. The information presented in this document is not intended as any commercial offer and does not form part of any quotation or contract, unless otherwise agreed by Signify. Philips and the Philips Shield Emblem are registered trademarks of Koninklijke Philips N.V.