PHILIPS

LuxSpace Pro

DN588B



LuxSpace Pro – high efficiency, visual comfort and a stylish design

Philips LuxSpace Pro builds on the LuxSpace family's reputation for superb performance, extremely low energy use, high visual comfort and appearance design. This next generation of reliable LED downlights comes in an elegant design with a deep, recessed architecture and increased reflector depth to highlight the smallest of details. LuxSpace Pro is also a shining example of versatility. This energy-saving LED downlight is available in a comprehensive range of configurations from 450 to 8,000 lumen, 3inch to 8inch, with the option to choose fixed, dimmable, or Interact Ready variants. This makes LuxSpace Pro the perfect 'mix and match' solution for potentially broad and extended applications that require different lighting ambiances, with one cohesive luminaire look and feel.

Benefits

- Energy-efficient LED
- Creates a gentle, natural light, ensuring visual comfort
- Perfect ceiling integration with narrow rim
- Option of glossy facetted & matte clear aluminized (UGR19), or facetted & matte white reflector
- Durable LED quality and reliability
- Supports Human Centric Lighting with Tunable White and integrated lighting controls

Applications

- Retail
- Offices
- Hospitals and Care Centers
- Hospitality
- Airports
- Exhibition Center

Features

- Best-in-class efficacy with up to 170lm/W
- Deep recessed architecture with increased reflector depth
- Spacious installation area with improved narrow rim width
- Choice of multiple optics: Facetted, matt and white
- 75,000 hours lifetime @L70/B50 Ta 25°C
- 50,000 hours lifetime @L80/B10 Ta 25°C
- DALI and wireless Interact compatible

Versions



LuxSpace Pro



LuxSpace Pro



LuxSpace Pro



LuxSpace Pro



LuxSpace Pro



LuxSpace Pro



LuxSpace Pro



LuxSpace Pro



LuxSpace Pro



Dimensional drawing

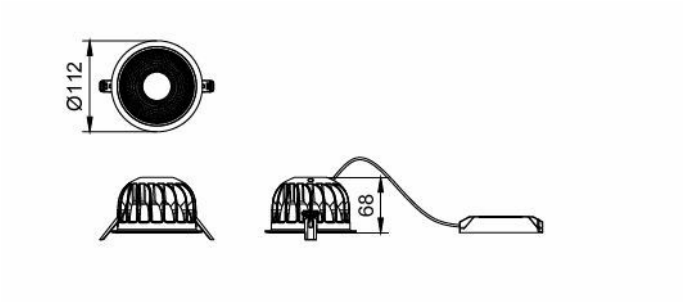

DN590B LED16/940 P13PSU D100 WB G2

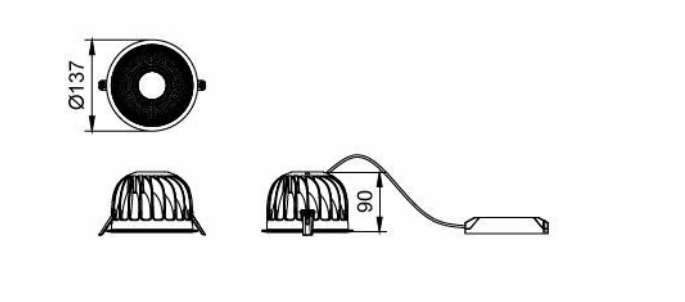

DN592B LED26/840 P21PSU D125 WB G2

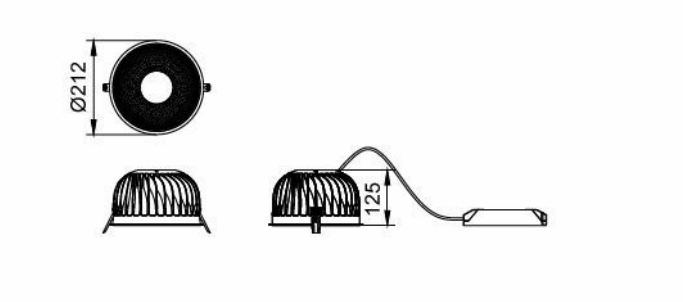

DN594B LED37/TNW P30PSD D200 WB G2

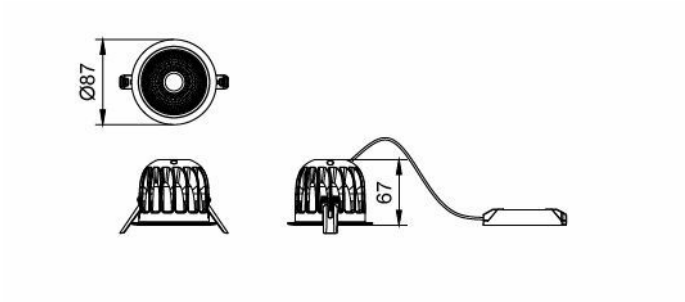

DN588B LED5/930 P4PSU D75 NB G2

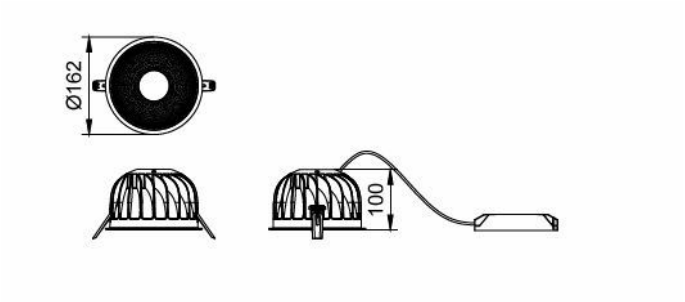

DN590B LED18/840 P14PSD D150 WB G2

General Information

Driver included	Yes
Service tag	Yes

Operating and Electrical

Line Frequency	50 or 60 Hz
Protection class IEC	Safety class II

Mechanical and Housing

Housing Color	White
Mech. impact protection code	IK03 [0.3 J]
Optical cover type	Polycarbonate Diffuser

Approval and Application

CE mark	Yes
Ambient temperature range	-20 to +40 °C

Initial Performance (IEC Compliant)

Luminous flux tolerance	+/-10%

Light Technical

Order Code	Full Product Name	Luminous Flux	Correlated Color Temperature (Nom)	Luminous Efficacy (rated) (Nom)	Color rendering index (CRI)	Optic type
911401502944	DN589B LED10/840 P8PSU D100 WB WP G2	1,070 lm	4000 K	127 lm/W	80	High-reflective metal reflector Wide beam 40 to 80 degrees
911401503544	DN589B LED11/TNW P10PSD D100 WB G2	1,050 lm	Tunable white 2700-6500 K	106 lm/W	>90	Beam angle 60°
911401504344	DN589B LED10/CED P10PSD D100 WB G2	970 lm	Tunable white 2700-6500 K	96 lm/W	>80	Beam angle 60°
911401505144	DN589X LED8/TNW P7PSD D100 WB G2	750 lm	Tunable white 2700-6500 K	106 lm/W	>90	Beam angle 60°
911401505944	DN589X LED7/CED P7PSD D100 WB G2	720 lm	Tunable white 2700-6500 K	100 lm/W	>80	Beam angle 60°
911401591243	DN588B LED5/930 P4PSU D100 WB G2	450 lm	3000 K	110 lm/W	90	High-reflective metal reflector Wide beam 40 to 80 degrees
911401591343	DN588B LED5/940 P4PSU D100 WB G2	480 lm	4000 K	117 lm/W	90	High-reflective metal reflector Wide beam 40 to 80 degrees
911401591443	DN589B LED10/930 P8PSU D100 WB G2	970 lm	3000 K	115 lm/W	90	High-reflective metal reflector Wide beam 40 to 80 degrees
911401591543	DN589B LED10/940 P8PSU D100 WB G2	1,020 lm	4000 K	121 lm/W	90	High-reflective metal reflector Wide beam 40 to 80 degrees
911401591643	DN590B LED16/930 P13PSU D100 WB G2	1,490 lm	3000 K	110 lm/W	90	High-reflective metal reflector Wide beam 40 to 80 degrees
911401591743	DN590B LED16/940 P13PSU D100 WB G2	1,570 lm	4000 K	116 lm/W	90	High-reflective metal reflector Wide beam 40 to 80 degrees
911401591843	DN589B LED10/930 P8PSD D100 WB G2	890 lm	3000 K	117 lm/W	90	High-reflective metal reflector Wide beam 40 to 80 degrees
911401591943	DN589B LED10/940 P8PSD D100 WB G2	940 lm	4000 K	124 lm/W	90	High-reflective metal reflector Wide beam 40 to 80 degrees
911401592043	DN590B LED16/930 P14PSD D100 WB G2	1,490 lm	3000 K	106 lm/W	90	High-reflective metal reflector Wide beam 40 to 80 degrees
911401592143	DN590B LED16/940 P14PSD D100 WB G2	1,570 lm	4000 K	112 lm/W	90	High-reflective metal reflector Wide beam 40 to 80 degrees
911401592243	DN589X LED10/940 P9WIA D100 WB G2	1,020 lm	4000 K	116 lm/W	90	High-reflective metal reflector Wide beam 40 to 80 degrees
911401592343	DN590X LED16/940 P14WIA D100 WB G2	1,570 lm	4000 K	115 lm/W	90	High-reflective metal reflector Wide beam 40 to 80 degrees
911401503744	DN591B LED21/TNW P18PSD D125 VWB G2	2,080 lm	Tunable white 2700-6500 K	115 lm/W	>90	Beam angle 60 to 120°
911401504544	DN591B LED19/CED P18PSD D125 VWB G2	1,910 lm	Tunable white 2700-6500 K	104 lm/W	>80	Beam angle 60 to 120°

Order Code	Full Product Name	Luminous Flux	Correlated Color Temperature (Nom)	Luminous Efficacy (rated) (Nom)	Color rendering index (CRI)	Optic type
911401505344	DN591X LED17/TNW P13PSD D125 VWB G2	1,640 lm	Tunable white 2700-6500 K	122 lm/W	>90	Beam angle 60 to 120°
911401506144	DN591X LED15/CED P14PSD D125 VWB G2	1,510 lm	Tunable white 2700-6500 K	111 lm/W	>80	Beam angle 60 to 120°
911401500044	DN596B LED80/830 P62PSU D200 WB G2	7,650 lm	3000 K	124 lm/W	80	High-reflective metal reflector Wide beam 40 to 80 degrees
911401500144	DN596B LED80/840 P62PSU D200 WB G2	7,980 lm	4000 K	130 lm/W	80	High-reflective metal reflector Wide beam 40 to 80 degrees
911401500444	DN596B LED80/830 P59PSD D200 WB G2	7,120 lm	3000 K	120 lm/W	80	High-reflective metal reflector Wide beam 40 to 80 degrees
911401500544	DN596B LED80/840 P59PSD D200 WB G2	7,430 lm	4000 K	126 lm/W	80	High-reflective metal reflector Wide beam 40 to 80 degrees
911401500844	DN591B LED19/830 P13PSU D200 WB G2	1,830 lm	3000 K	143 lm/W	80	High-reflective metal reflector Wide beam 40 to 80 degrees
911401500944	DN591B LED19/840 P13PSU D200 WB G2	1,910 lm	4000 K	149 lm/W	80	High-reflective metal reflector Wide beam 40 to 80 degrees
911401501244	DN591B LED19/830 P13PSD D200 WB G2	1,830 lm	3000 K	138 lm/W	80	High-reflective metal reflector Wide beam 40 to 80 degrees
911401501344	DN591B LED19/840 P13PSD D200 WB G2	1,910 lm	4000 K	144 lm/W	80	High-reflective metal reflector Wide beam 40 to 80 degrees
911401501544	DN591X LED19/840 P13WIA D200 WB G2	1,910 lm	4000 K	148 lm/W	80	High-reflective metal reflector Wide beam 40 to 80 degrees
911401501844	DN593B LED29/830 P20PSU D200 WB G2	2,820 lm	3000 K	140 lm/W	80	High-reflective metal reflector Wide beam 40 to 80 degrees
911401501944	DN593B LED29/840 P20PSU D200 WB G2	2,940 lm	4000 K	146 lm/W	80	High-reflective metal reflector Wide beam 40 to 80 degrees
911401502244	DN593B LED29/830 P21PSD D200 WB G2	2,820 lm	3000 K	136 lm/W	80	High-reflective metal reflector Wide beam 40 to 80 degrees
911401502344	DN593B LED29/840 P21PSD D200 WB G2	2,940 lm	4000 K	141 lm/W	80	High-reflective metal reflector Wide beam 40 to 80 degrees
911401502844	DN591B LED23/840 P13PSU D200 WB UE G2	2,280 lm	4000 K	173 lm/W	80	High-reflective metal reflector Wide beam 40 to 80 degrees
911401504044	DN594B LED37/TNW P30PSD D200 WB G2	3,690 lm	Tunable white 2700-6500 K	122 lm/W	>90	Beam angle 60°
911401504844	DN594B LED34/CED P31PSD D200 WB G2	3,420 lm	Tunable white 2700-6500 K	111 lm/W	>80	Beam angle 60°
911401505644	DN594X LED39/TNW P32PSD D200 WB G2	3,920 lm	Tunable white 2700-6500 K	124 lm/W	>90	Beam angle 60°
911401506444	DN594X LED36/CED P32PSD D200 WB G2	3,620 lm	Tunable white 2700-6500 K	113 lm/W	>80	Beam angle 60°
911401598243	DN594B LED42/830 P30PSU D200 WB G2	4,050 lm	3000 K	136 lm/W	80	High-reflective metal reflector Wide beam 40 to 80 degrees
911401598343	DN594B LED42/840 P30PSU D200 WB G2	4,220 lm	4000 K	142 lm/W	80	High-reflective metal reflector Wide beam 40 to 80 degrees
911401598643	DN594B LED42/830 P31PSD D200 WB G2	4,050 lm	3000 K	132 lm/W	80	High-reflective metal reflector Wide beam 40 to 80 degrees
911401598743	DN594B LED42/840 P31PSD D200 WB G2	4,220 lm	4000 K	137 lm/W	80	High-reflective metal reflector Wide beam 40 to 80 degrees
911401598943	DN594X LED42/840 P30WIA D200 WB G2	4,220 lm	4000 K	142 lm/W	80	High-reflective metal reflector Wide beam 40 to 80 degrees
911401599243	DN595B LED61/830 P46PSU D200 WB G2	5,895 lm	3000 K	130 lm/W	80	High-reflective metal reflector Wide beam 40 to 80 degrees

Order Code	Full Product Name	Luminous Flux	Correlated Color Temperature (Nom)	Luminous Efficacy (rated) (Nom)	Color rendering index (CRI)	Optic type
911401599343	DN595B LED61/840 P46PSU D200 WB G2	6,120 lm	4000 K	135 lm/W	80	High-reflective metal reflector Wide beam 40 to 80 degrees
911401599643	DN595B LED61/830 P47PSD D200 WB G2	5,870 lm	3000 K	126 lm/W	80	High-reflective metal reflector Wide beam 40 to 80 degrees
911401599743	DN595B LED61/840 P47PSD D200 WB G2	6,120 lm	4000 K	131 lm/W	80	High-reflective metal reflector Wide beam 40 to 80 degrees
911401500244	DN596B LED80/830 P59PSD D200 VWB-M G2	7,300 lm	3000 K	124 lm/W	80	High-efficiency reflector medium beam
911401500344	DN596B LED80/840 P59PSD D200 VWB-M G2	7,660 lm	4000 K	130 lm/W	80	High-efficiency reflector medium beam
911401500644	DN591B LED19/830 P13PSU D200 VWB-M G2	1,870 lm	3000 K	146 lm/W	80	High-efficiency reflector medium beam
911401500744	DN591B LED19/840 P13PSU D200 VWB-M G2	1,950 lm	4000 K	152 lm/W	80	High-efficiency reflector medium beam
911401501044	DN591B LED19/830 P13PSD D200 VWB-M G2	1,870 lm	3000 K	141 lm/W	80	High-efficiency reflector medium beam
911401501144	DN591B LED19/840 P13PSD D200 VWB-M G2	1,950 lm	4000 K	147 lm/W	80	High-efficiency reflector medium beam
911401501444	DN591X LED19/840 P13WIA D200 VWB-M G2	1,950 lm	4000 K	151 lm/W	80	High-efficiency reflector medium beam
911401501644	DN593B LED29/830 P20PSU D200 VWB-M G2	2,890 lm	3000 K	144 lm/W	80	High-efficiency reflector medium beam
911401501744	DN593B LED29/840 P20PSU D200 VWB-M G2	3,020 lm	4000 K	150 lm/W	80	High-efficiency reflector medium beam
911401502044	DN593B LED29/830 P21PSD D200 VWB-M G2	2,890 lm	3000 K	139 lm/W	80	High-efficiency reflector medium beam
911401502144	DN593B LED29/840 P21PSD D200 VWB-M G2	3,020 lm	4000 K	145 lm/W	80	High-efficiency reflector medium beam
911401502744	DN591B LED23/840 P13PSU D200 VWB-M UE G2	2,330 lm	4000 K	177 lm/W	80	High-efficiency reflector medium beam
911401598043	DN594B LED42/830 P30PSU D200 VWB-M G2	4,150 lm	3000 K	140 lm/W	80	High-efficiency reflector medium beam
911401598143	DN594B LED42/840 P30PSU D200 VWB-M G2	4,320 lm	4000 K	145 lm/W	80	High-efficiency reflector medium beam
911401598443	DN594B LED42/830 P31PSD D200 VWB-M G2	4,150 lm	3000 K	135 lm/W	80	High-efficiency reflector medium beam
911401598543	DN594B LED42/840 P31PSD D200 VWB-M G2	4,320 lm	4000 K	141 lm/W	80	High-efficiency reflector medium beam
911401598843	DN594X LED42/840 P30WIA D200 VWB-M G2	4,320 lm	4000 K	145 lm/W	80	High-efficiency reflector medium beam
911401599043	DN595B LED61/830 P46PSU D200 VWB-M G2	6,010 lm	3000 K	132 lm/W	80	High-efficiency reflector medium beam
911401599143	DN595B LED61/840 P46PSU D200 VWB-M G2	6,260 lm	4000 K	138 lm/W	80	High-efficiency reflector medium beam
911401599443	DN595B LED61/830 P47PSD D200 VWB-M G2	6,035 lm	3000 K	130 lm/W	80	High-efficiency reflector medium beam
911401599543	DN595B LED61/840 P47PSD D200 VWB-M G2	6,260 lm	4000 K	134 lm/W	80	High-efficiency reflector medium beam
911401599843	DN596B LED80/830 P62PSU D200 VWB-M G2	7,840 lm	3000 K	127 lm/W	80	High-efficiency reflector medium beam
911401599943	DN596B LED80/840 P62PSU D200 VWB-M G2	8,170 lm	4000 K	133 lm/W	80	High-efficiency reflector medium beam

Order Code	Full Product Name	Luminous Flux	Correlated Color Temperature (Nom)	Luminous Efficacy (rated) (Nom)	Color rendering index (CRI)	Optic type
911401502544	DN589B LED12/840 P7PSU D125 WB UE G2	1,180 lm	4000 K	157 lm/W	80	High-reflective metal reflector Wide beam 40 to 80 degrees
911401503044	DN590B LED17/840 P13PSU D125 WB WP G2	1,740 lm	4000 K	131 lm/W	80	High-reflective metal reflector Wide beam 40 to 80 degrees
911401503644	DN591B LED20/TNW P18PSD D125 WB G2	2,030 lm	Tunable white 2700-6500 K	112 lm/W	>90	Beam angle 60°
911401504444	DN591B LED19/CED P18PSD D125 WB G2	1,870 lm	Tunable white 2700-6500 K	102 lm/W	>80	Beam angle 60°
911401505244	DN591X LED16/TNW P13PSD D125 WB G2	1,600 lm	Tunable white 2700-6500 K	119 lm/W	>90	Beam angle 60°
911401506044	DN591X LED15/CED P14PSD D125 WB G2	1,470 lm	Tunable white 2700-6500 K	108 lm/W	>80	Beam angle 60°
911401592643	DN588B LED9/830 P6PSU D125 WB G2	845 lm	3000 K	130 lm/W	80	High-reflective metal reflector Wide beam 40 to 80 degrees
911401592743	DN588B LED9/840 P6PSU D125 WB G2	870 lm	4000 K	134 lm/W	80	High-reflective metal reflector Wide beam 40 to 80 degrees
911401593043	DN589B LED11/830 P8PSU D125 WB G2	1,075 lm	3000 K	130 lm/W	80	High-reflective metal reflector Wide beam 40 to 80 degrees
911401593143	DN589B LED11/840 P8PSU D125 WB G2	1,120 lm	4000 K	135 lm/W	80	High-reflective metal reflector Wide beam 40 to 80 degrees
911401593443	DN589B LED11/830 P8PSD D125 WB G2	970 lm	3000 K	121 lm/W	80	High-reflective metal reflector Wide beam 40 to 80 degrees
911401593543	DN589B LED11/840 P8PSD D125 WB G2	1,010 lm	4000 K	126 lm/W	80	High-reflective metal reflector Wide beam 40 to 80 degrees
911401593843	DN590B LED17/830 P13PSU D125 WB G2	1,670 lm	3000 K	126 lm/W	80	High-reflective metal reflector Wide beam 40 to 80 degrees
911401593943	DN590B LED17/840 P13PSU D125 WB G2	1,740 lm	4000 K	131 lm/W	80	High-reflective metal reflector Wide beam 40 to 80 degrees
911401594243	DN590B LED17/830 P14PSD D125 WB G2	1,670 lm	3000 K	121 lm/W	80	High-reflective metal reflector Wide beam 40 to 80 degrees
911401594343	DN590B LED17/840 P14PSD D125 WB G2	1,740 lm	4000 K	126 lm/W	80	High-reflective metal reflector Wide beam 40 to 80 degrees
911401594643	DN591B LED22/830 P17PSU D125 WB G2	2,130 lm	3000 K	125 lm/W	80	High-reflective metal reflector Wide beam 40 to 80 degrees
911401594743	DN591B LED22/840 P17PSU D125 WB G2	2,220 lm	4000 K	130 lm/W	80	High-reflective metal reflector Wide beam 40 to 80 degrees
911401595043	DN591B LED22/830 P18PSD D125 WB G2	2,130 lm	3000 K	120 lm/W	80	High-reflective metal reflector Wide beam 40 to 80 degrees
911401595143	DN591B LED22/840 P18PSD D125 WB G2	2,220 lm	4000 K	125 lm/W	80	High-reflective metal reflector Wide beam 40 to 80 degrees
911401595343	DN591X LED22/840 P17WIA D125 WB G2	2,220 lm	4000 K	130 lm/W	80	High-reflective metal reflector Wide beam 40 to 80 degrees
911401595643	DN592B LED26/830 P21PSU D125 WB G2	2,530 lm	3000 K	119 lm/W	80	High-reflective metal reflector Wide beam 40 to 80 degrees
911401595743	DN592B LED26/840 P21PSU D125 WB G2	2,640 lm	4000 K	125 lm/W	80	High-reflective metal reflector Wide beam 40 to 80 degrees
911401596043	DN592B LED26/830 P22PSD D125 WB G2	2,530 lm	3000 K	116 lm/W	80	High-reflective metal reflector Wide beam 40 to 80 degrees
911401596143	DN592B LED26/840 P22PSD D125 WB G2	2,640 lm	4000 K	121 lm/W	80	High-reflective metal reflector Wide beam 40 to 80 degrees
911401596343	DN592X LED26/840 P21WIA D125 WB G2	2,640 lm	4000 K	125 lm/W	80	High-reflective metal reflector Wide beam 40 to 80 degrees

Order Code	Full Product Name	Luminous Flux	Correlated Color Temperature (Nom)	Luminous Efficacy (rated) (Nom)	Color rendering index (CRI)	Optic type
911401588543	DN588B LED5/930 P4PSU D75 NB G2	420 lm	3000 K	100 lm/W	90	High-reflective metal reflector Medium beam 20 to 40 degrees
911401588643	DN588B LED5/940 P4PSU D75 NB G2	450 lm	4000 K	107 lm/W	90	High-reflective metal reflector Medium beam 20 to 40 degrees
911401588743	DN588B LED5/930 P4PSU D75 MB G2	420 lm	3000 K	100 lm/W	90	High-reflective metal reflector Medium beam 20 to 40 degrees
911401588843	DN588B LED5/940 P4PSU D75 MB G2	450 lm	4000 K	107 lm/W	90	High-reflective metal reflector Medium beam 20 to 40 degrees
911401588943	DN588B LED5/930 P4PSU D75 WB G2	420 lm	3000 K	100 lm/W	90	High-reflective metal reflector Wide beam 40 to 80 degrees
911401589043	DN588B LED5/940 P4PSU D75 WB G2	450 lm	4000 K	107 lm/W	90	High-reflective metal reflector Wide beam 40 to 80 degrees
911401589143	DN589B LED10/930 P8PSU D75 NB G2	920 lm	3000 K	108 lm/W	90	High-reflective metal reflector Medium beam 20 to 40 degrees
911401589243	DN589B LED10/940 P8PSU D75 NB G2	990 lm	4000 K	116 lm/W	90	High-reflective metal reflector Medium beam 20 to 40 degrees
911401589343	DN589B LED10/930 P8PSU D75 MB G2	920 lm	3000 K	108 lm/W	90	High-reflective metal reflector Medium beam 20 to 40 degrees
911401589443	DN589B LED10/940 P8PSU D75 MB G2	990 lm	4000 K	116 lm/W	90	High-reflective metal reflector Medium beam 20 to 40 degrees
911401589543	DN589B LED10/930 P8PSU D75 WB G2	920 lm	3000 K	108 lm/W	90	High-reflective metal reflector Wide beam 40 to 80 degrees
911401589643	DN589B LED10/940 P8PSU D75 WB G2	990 lm	4000 K	116 lm/W	90	High-reflective metal reflector Wide beam 40 to 80 degrees
911401589743	DN590B LED15/930 P14PSU D75 NB G2	1,410 lm	3000 K	104 lm/W	90	High-reflective metal reflector Medium beam 20 to 40 degrees
911401589843	DN590B LED15/940 P14PSU D75 NB G2	1,510 lm	4000 K	111 lm/W	90	High-reflective metal reflector Medium beam 20 to 40 degrees
911401589943	DN590B LED15/930 P14PSU D75 MB G2	1,410 lm	3000 K	104 lm/W	90	High-reflective metal reflector Medium beam 20 to 40 degrees
911401590043	DN590B LED15/940 P14PSU D75 MB G2	1,510 lm	4000 K	111 lm/W	90	High-reflective metal reflector Medium beam 20 to 40 degrees
911401590143	DN590B LED15/930 P14PSU D75 WB G2	1,410 lm	3000 K	104 lm/W	90	High-reflective metal reflector Wide beam 40 to 80 degrees
911401590243	DN590B LED15/940 P14PSU D75 WB G2	1,510 lm	4000 K	111 lm/W	90	High-reflective metal reflector Wide beam 40 to 80 degrees
911401590343	DN590B LED15/930 P14PSD D75 NB G2	1,410 lm	3000 K	100 lm/W	90	High-reflective metal reflector Medium beam 20 to 40 degrees
911401590443	DN590B LED15/940 P14PSD D75 NB G2	1,510 lm	4000 K	107 lm/W	90	High-reflective metal reflector Medium beam 20 to 40 degrees
911401590543	DN590B LED15/930 P14PSD D75 MB G2	1,410 lm	3000 K	100 lm/W	90	High-reflective metal reflector Medium beam 20 to 40 degrees
911401590643	DN590B LED15/940 P14PSD D75 MB G2	1,510 lm	4000 K	107 lm/W	90	High-reflective metal reflector Medium beam 20 to 40 degrees
911401590743	DN590B LED15/930 P14PSD D75 WB G2	1,410 lm	3000 K	100 lm/W	90	High-reflective metal reflector Wide beam 40 to 80 degrees
911401590843	DN590B LED15/940 P14PSD D75 WB G2	1,510 lm	4000 K	107 lm/W	90	High-reflective metal reflector Wide beam 40 to 80 degrees
911401590943	DN590X LED15/940 P14WIA D75 NB G2	1,510 lm	4000 K	109 lm/W	90	High-reflective metal reflector Medium beam 20 to 40 degrees
911401591043	DN590X LED15/940 P14WIA D75 MB G2	1,510 lm	4000 K	109 lm/W	90	High-reflective metal reflector Medium beam 20 to 40 degrees

Order Code	Full Product Name	Luminous Flux	Correlated Color Temperature (Nom)	Luminous Efficacy (rated) (Nom)	Color rendering index (CRI)	Optic type
911401591143	DN590X LED15/940 P14WIA D75 WB G2	1,510 lm	4000 K	109 lm/W	90	High-reflective metal reflector Wide beam 40 to 80 degrees
911401502444	DN589B LED12/840 P7PSU D125 VWB-M UE G2	1,210 lm	4000 K	161 lm/W	80	High-efficiency reflector medium beam
911401592443	DN588B LED9/830 P6PSU D125 VWB-M G2	860 lm	3000 K	132 lm/W	80	High-efficiency reflector medium beam
911401592543	DN588B LED9/840 P6PSU D125 VWB-M G2	890 lm	4000 K	137 lm/W	80	High-efficiency reflector medium beam
911401592843	DN589B LED11/830 P8PSU D125 VWB-M G2	1,100 lm	3000 K	133 lm/W	80	High-efficiency reflector medium beam
911401592943	DN589B LED11/840 P8PSU D125 VWB-M G2	1,140 lm	4000 K	137 lm/W	80	High-efficiency reflector medium beam
911401593243	DN589B LED11/830 P8PSD D125 VWB-M G2	990 lm	3000 K	124 lm/W	80	High-efficiency reflector medium beam
911401593343	DN589B LED11/840 P8PSD D125 VWB-M G2	1,040 lm	4000 K	130 lm/W	80	High-efficiency reflector medium beam
911401593643	DN590B LED17/830 P13PSU D125 VWB-M G2	1,725 lm	3000 K	130 lm/W	80	High-efficiency reflector medium beam
911401593743	DN590B LED17/840 P13PSU D125 VWB-M G2	1,790 lm	4000 K	135 lm/W	80	High-efficiency reflector medium beam
911401594043	DN590B LED17/830 P14PSD D125 VWB-M G2	1,710 lm	3000 K	124 lm/W	80	High-efficiency reflector medium beam
911401594143	DN590B LED17/840 P14PSD D125 VWB-M G2	1,790 lm	4000 K	130 lm/W	80	High-efficiency reflector medium beam
911401594443	DN591B LED22/830 P17PSU D125 VWB-M G2	2,180 lm	3000 K	127 lm/W	80	High-efficiency reflector medium beam
911401594543	DN591B LED22/840 P17PSU D125 VWB-M G2	2,270 lm	4000 K	133 lm/W	80	High-efficiency reflector medium beam
911401594843	DN591B LED22/830 P18PSD D125 VWB-M G2	2,180 lm	3000 K	123 lm/W	80	High-efficiency reflector medium beam
911401594943	DN591B LED22/840 P18PSD D125 VWB-M G2	2,295 lm	4000 K	130 lm/W	80	High-efficiency reflector medium beam
911401595243	DN591X LED22/840 P17WIA D125 VWB-M G2	2,270 lm	4000 K	133 lm/W	80	High-efficiency reflector medium beam
911401595443	DN592B LED26/830 P21PSU D125 VWB-M G2	2,590 lm	3000 K	122 lm/W	80	High-efficiency reflector medium beam
911401595543	DN592B LED26/840 P21PSU D125 VWB-M G2	2,700 lm	4000 K	127 lm/W	80	High-efficiency reflector medium beam
911401595843	DN592B LED26/830 P22PSD D125 VWB-M G2	2,590 lm	3000 K	118 lm/W	80	High-efficiency reflector medium beam
911401595943	DN592B LED26/840 P22PSD D125 VWB-M G2	2,700 lm	4000 K	123 lm/W	80	High-efficiency reflector medium beam
911401596243	DN592X LED26/840 P21WIA D125 VWB-M G2	2,700 lm	4000 K	127 lm/W	80	High-efficiency reflector medium beam
911401504144	DN594B LED39/TNW P30PSD D200 VWB G2	3,925 lm	Tunable white 2700-6500 K	130 lm/W	>90	Beam angle 60 to 120°
911401504944	DN594B LED36/CED P31PSD D200 VWB G2	3,610 lm	Tunable white 2700-6500 K	118 lm/W	>80	Beam angle 60 to 120°
911401505744	DN594X LED41/TNW P32PSD D200 VWB G2	4,140 lm	Tunable white 2700-6500 K	131 lm/W	>90	Beam angle 60 to 120°
911401506544	DN594X LED38/CED P32PSD D200 VWB G2	3,830 lm	Tunable white 2700-6500 K	120 lm/W	>80	Beam angle 60 to 120°

Order Code	Full Product Name	Luminous Flux	Correlated Color Temperature (Nom)	Luminous Efficacy (rated) (Nom)	Color rendering index (CRI)	Optic type
911401502644	DN590B LED17/840 P10PSU D150 WB UE G2	1,660 lm	4000 K	166 lm/W	80	High-reflective metal reflector Wide beam 40 to 80 degrees
911401503144	DN591B LED23/840 P17PSU D150 WB WP G2	2,260 lm	4000 K	135 lm/W	80	High-reflective metal reflector Wide beam 40 to 80 degrees
911401503244	DN592B LED27/830 P21PSU D150 WB G2	2,610 lm	3000 K	125 lm/W	80	High-reflective metal reflector Wide beam 40 to 80 degrees
911401503344	DN592B LED27/840 P21PSU D150 WB G2	2,720 lm	4000 K	131 lm/W	80	High-reflective metal reflector Wide beam 40 to 80 degrees
911401503844	DN592B LED26/TNW P23PSD D150 WB G2	2,650 lm	Tunable white 2700-6500 K	115 lm/W	>90	Beam angle 60°
911401504644	DN592B LED24/CED P24PSD D150 WB G2	2,440 lm	Tunable white 2700-6500 K	104 lm/W	>80	Beam angle 60°
911401505444	DN592X LED29/TNW P25PSD D150 WB G2	2,860 lm	Tunable white 2700-6500 K	113 lm/W	>90	Beam angle 60°
911401506244	DN592X LED26/CED P26PSD D150 WB G2	2,630 lm	Tunable white 2700-6500 K	102 lm/W	>80	Beam angle 60°
911401596443	DN589B LED12/830 P8PSU D150 WB G2	1,110 lm	3000 K	135 lm/W	80	High-reflective metal reflector Wide beam 40 to 80 degrees
911401596543	DN589B LED12/840 P8PSU D150 WB G2	1,160 lm	4000 K	141 lm/W	80	High-reflective metal reflector Wide beam 40 to 80 degrees
911401596643	DN590B LED18/830 P13PSU D150 WB G2	1,710 lm	3000 K	131 lm/W	80	High-reflective metal reflector Wide beam 40 to 80 degrees
911401596743	DN590B LED18/840 P13PSU D150 WB G2	1,790 lm	4000 K	137 lm/W	80	High-reflective metal reflector Wide beam 40 to 80 degrees
911401596843	DN591B LED23/830 P17PSU D150 WB G2	2,180 lm	3000 K	130 lm/W	80	High-reflective metal reflector Wide beam 40 to 80 degrees
911401596943	DN591B LED23/840 P17PSU D150 WB G2	2,260 lm	4000 K	135 lm/W	80	High-reflective metal reflector Wide beam 40 to 80 degrees
911401597043	DN589B LED12/830 P8PSD D150 WB G2	990 lm	3000 K	125 lm/W	80	High-reflective metal reflector Wide beam 40 to 80 degrees
911401597143	DN589B LED12/840 P8PSD D150 WB G2	1,040 lm	4000 K	132 lm/W	80	High-reflective metal reflector Wide beam 40 to 80 degrees
911401597243	DN590B LED18/830 P14PSD D150 WB G2	1,710 lm	3000 K	126 lm/W	80	High-reflective metal reflector Wide beam 40 to 80 degrees
911401597343	DN590B LED18/840 P14PSD D150 WB G2	1,790 lm	4000 K	132 lm/W	80	High-reflective metal reflector Wide beam 40 to 80 degrees
911401597443	DN591B LED23/830 P17PSD D150 WB G2	2,170 lm	3000 K	125 lm/W	80	High-reflective metal reflector Wide beam 40 to 80 degrees
911401597543	DN591B LED23/840 P17PSD D150 WB G2	2,260 lm	4000 K	130 lm/W	80	High-reflective metal reflector Wide beam 40 to 80 degrees
911401597643	DN589X LED12/840 P9WIA D150 WB G2	1,160 lm	4000 K	135 lm/W	80	High-reflective metal reflector Wide beam 40 to 80 degrees
911401597743	DN592B LED27/830 P22PSD D150 WB G2	2,610 lm	3000 K	121 lm/W	80	High-reflective metal reflector Wide beam 40 to 80 degrees
911401597843	DN592B LED27/840 P22PSD D150 WB G2	2,720 lm	4000 K	127 lm/W	80	High-reflective metal reflector Wide beam 40 to 80 degrees
911401597943	DN592X LED27/840 P21WIA D150 WB G2	2,720 lm	4000 K	131 lm/W	80	High-reflective metal reflector Wide beam 40 to 80 degrees
911401503944	DN592B LED28/TNW P23PSD D150 VWB G2	2,810 lm	Tunable white 2700-6500 K	122 lm/W	>90	Beam angle 60 to 120°
911401504744	DN592B LED26/CED P24PSD D150 VWB G2	2,580 lm	Tunable white 2700-6500 K	110 lm/W	>80	Beam angle 60 to 120°

Order Code	Full Product Name	Luminous Flux	Correlated Color Temperature (Nom)	Luminous Efficacy (rated) (Nom)	Color rendering index (CRI)	Optic type
911401505544	DN592X LED30/TNW P25PSD D150 VWB G2	3,030 lm	Tunable white 2700-6500 K	120 lm/W	>90	Beam angle 60 to 120°
911401506344	DN592X LED28/CED P26PSD D150 VWB G2	2,780 lm	Tunable white 2700-6500 K	108 lm/W	>80	Beam angle 60 to 120°

Operating and Electrical

Order Code	Full Product Name	Input Voltage	Power Consumption
911401502944	DN589B LED10/840 P8PSU D100 WB WP G2	220-240 V	8.4 W
911401503544	DN589B LED11/TNW P10PSD D100 WB G2	220 to 240 V	9.9 W
911401504344	DN589B LED10/CED P10PSD D100 WB G2	220 to 240 V	10.1 W
911401505144	DN589X LED8/TNW P7PSD D100 WB G2	220 to 240 V	7.1 W
911401505944	DN589X LED7/CED P7PSD D100 WB G2	220 to 240 V	7.2 W
911401591243	DN588B LED5/930 P4PSU D100 WB G2	220-240 V	4.1 W
911401591343	DN588B LED5/940 P4PSU D100 WB G2	220-240 V	4.1 W
911401591443	DN589B LED10/930 P8PSU D100 WB G2	220-240 V	8.4 W
911401591543	DN589B LED10/940 P8PSU D100 WB G2	220-240 V	8.4 W
911401591643	DN590B LED16/930 P13PSU D100 WB G2	220-240 V	13.5 W
911401591743	DN590B LED16/940 P13PSU D100 WB G2	220-240 V	13.5 W
911401591843	DN589B LED10/930 P8PSD D100 WB G2	220-240 V	8.8 W
911401591943	DN589B LED10/940 P8PSD D100 WB G2	220-240 V	8.8 W
911401592043	DN590B LED16/930 P14PSD D100 WB G2	220-240 V	14 W
911401592143	DN590B LED16/940 P14PSD D100 WB G2	220-240 V	14 W
911401592243	DN589X LED10/940 P9WIA D100 WB G2	220-240 V	8.8 W
911401592343	DN590X LED16/940 P14WIA D100 WB G2	220-240 V	13.6 W
911401503744	DN591B LED21/TNW P18PSD D125 VWB G2	220 to 240 V	18.1 W
911401504544	DN591B LED19/CED P18PSD D125 VWB G2	220 to 240 V	18.4 W
911401505344	DN591X LED17/TNW P13PSD D125 VWB G2	220 to 240 V	13.4 W
911401506144	DN591X LED15/CED P14PSD D125 VWB G2	220 to 240 V	13.6 W
911401500044	DN596B LED80/830 P62PSU D200 WB G2	220-240 V	61.6 W
911401500144	DN596B LED80/840 P62PSU D200 WB G2	220-240 V	61.6 W
911401500444	DN596B LED80/830 P59PSD D200 WB G2	220-240 V	59.1 W
911401500544	DN596B LED80/840 P59PSD D200 WB G2	220-240 V	59.1 W
911401500844	DN591B LED19/830 P13PSU D200 WB G2	220-240 V	12.8 W
911401500944	DN591B LED19/840 P13PSU D200 WB G2	220-240 V	12.8 W
911401501244	DN591B LED19/830 P13PSD D200 WB G2	220-240 V	13.3 W
911401501344	DN591B LED19/840 P13PSD D200 WB G2	220-240 V	13.3 W
911401501544	DN591X LED19/840 P13WIA D200 WB G2	220-240 V	12.9 W
911401501844	DN593B LED29/830 P20PSU D200 WB G2	220-240 V	20.1 W
911401501944	DN593B LED29/840 P20PSU D200 WB G2	220-240 V	20.1 W
911401502244	DN593B LED29/830 P21PSD D200 WB G2	220-240 V	20.8 W

Order Code	Full Product Name	Input Voltage	Power Consumption
911401502344	DN593B LED29/840 P21PSD D200 WB G2	220-240 V	20.8 W
911401502844	DN591B LED23/840 P13PSU D200 WB UE G2	220-240 V	13.2 W
911401504044	DN594B LED37/TNW P30PSD D200 WB G2	220 to 240 V	30.3 W
911401504844	DN594B LED34/CED P31PSD D200 WB G2	220 to 240 V	30.7 W
911401505644	DN594X LED39/TNW P32PSD D200 WB G2	220 to 240 V	31.6 W
911401506444	DN594X LED36/CED P32PSD D200 WB G2	220 to 240 V	32 W
911401598243	DN594B LED42/830 P30PSU D200 WB G2	220-240 V	29.7 W
911401598343	DN594B LED42/840 P30PSU D200 WB G2	220-240 V	29.7 W
911401598643	DN594B LED42/830 P31PSD D200 WB G2	220-240 V	30.7 W
911401598743	DN594B LED42/840 P31PSD D200 WB G2	220-240 V	30.7 W
911401598943	DN594X LED42/840 P30WIA D200 WB G2	220-240 V	29.7 W
911401599243	DN595B LED61/830 P46PSU D200 WB G2	220-240 V	45.5 W
911401599343	DN595B LED61/840 P46PSU D200 WB G2	220-240 V	45.5 W
911401599643	DN595B LED61/830 P47PSD D200 WB G2	220-240 V	46.6 W
911401599743	DN595B LED61/840 P47PSD D200 WB G2	220-240 V	46.6 W
911401500244	DN596B LED80/830 P59PSD D200 VWB-M G2	220-240 V	59.1 W
911401500344	DN596B LED80/840 P59PSD D200 VWB-M G2	220-240 V	59.1 W
911401500644	DN591B LED19/830 P13PSU D200 VWB-M G2	220-240 V	12.8 W
911401500744	DN591B LED19/840 P13PSU D200 VWB-M G2	220-240 V	12.8 W
911401501044	DN591B LED19/830 P13PSD D200 VWB-M G2	220-240 V	13.3 W
911401501144	DN591B LED19/840 P13PSD D200 VWB-M G2	220-240 V	13.3 W
911401501444	DN591X LED19/840 P13WIA D200 VWB-M G2	220-240 V	12.9 W
911401501644	DN593B LED29/830 P20PSU D200 VWB-M G2	220-240 V	20.1 W
911401501744	DN593B LED29/840 P20PSU D200 VWB-M G2	220-240 V	20.1 W
911401502044	DN593B LED29/830 P21PSD D200 VWB-M G2	220-240 V	20.8 W
911401502144	DN593B LED29/840 P21PSD D200 VWB-M G2	220-240 V	20.8 W
911401502744	DN591B LED23/840 P13PSU D200 VWB-M UE G2	220-240 V	13.2 W
911401598043	DN594B LED42/830 P30PSU D200 VWB-M G2	220-240 V	29.7 W
911401598143	DN594B LED42/840 P30PSU D200 VWB-M G2	220-240 V	29.7 W
911401598443	DN594B LED42/830 P31PSD D200 VWB-M G2	220-240 V	30.7 W
911401598543	DN594B LED42/840 P31PSD D200 VWB-M G2	220-240 V	30.7 W
911401598843	DN594X LED42/840 P30WIA D200 VWB-M G2	220-240 V	29.7 W
911401599043	DN595B LED61/830 P46PSU D200 VWB-M G2	220-240 V	45.5 W
911401599143	DN595B LED61/840 P46PSU D200 VWB-M G2	220-240 V	45.5 W
911401599443	DN595B LED61/830 P47PSD D200 VWB-M G2	220-240 V	46.6 W
911401599543	DN595B LED61/840 P47PSD D200 VWB-M G2	220-240 V	46.6 W
911401599843	DN596B LED80/830 P62PSU D200 VWB-M G2	220-240 V	61.6 W
911401599943	DN596B LED80/840 P62PSU D200 VWB-M G2	220-240 V	61.6 W
911401502544	DN589B LED12/840 P7PSU D125 WB UE G2	220-240 V	7.5 W
911401503044	DN590B LED17/840 P13PSU D125 WB WP G2	220-240 V	13.3 W
911401503644	DN591B LED20/TNW P18PSD D125 WB G2	220 to 240 V	18.1 W
911401504444	DN591B LED19/CED P18PSD D125 WB G2	220 to 240 V	18.4 W

Order Code	Full Product Name	Input Voltage	Power Consumption
911401505244	DN591X LED16/TNW P13PSD D125 WB G2	220 to 240 V	13.4 W
911401506044	DN591X LED15/CED P14PSD D125 WB G2	220 to 240 V	13.6 W
911401592643	DN588B LED9/830 P6PSU D125 WB G2	220-240 V	6.5 W
911401592743	DN588B LED9/840 P6PSU D125 WB G2	220-240 V	6.5 W
911401593043	DN589B LED11/830 P8PSU D125 WB G2	220-240 V	8.3 W
911401593143	DN589B LED11/840 P8PSU D125 WB G2	220-240 V	8.3 W
911401593443	DN589B LED11/830 P8PSD D125 WB G2	220-240 V	8 W
911401593543	DN589B LED11/840 P8PSD D125 WB G2	220-240 V	8 W
911401593843	DN590B LED17/830 P13PSU D125 WB G2	220-240 V	13.3 W
911401593943	DN590B LED17/840 P13PSU D125 WB G2	220-240 V	13.3 W
911401594243	DN590B LED17/830 P14PSD D125 WB G2	220-240 V	13.8 W
911401594343	DN590B LED17/840 P14PSD D125 WB G2	220-240 V	13.8 W
911401594643	DN591B LED22/830 P17PSU D125 WB G2	220-240 V	16.8 W
911401594743	DN591B LED22/840 P17PSU D125 WB G2	220-240 V	16.8 W
911401595043	DN591B LED22/830 P18PSD D125 WB G2	220-240 V	17.7 W
911401595143	DN591B LED22/840 P18PSD D125 WB G2	220-240 V	17.7 W
911401595343	DN591X LED22/840 P17WIA D125 WB G2	220-240 V	17.1 W
911401595643	DN592B LED26/830 P21PSU D125 WB G2	220-240 V	21.2 W
911401595743	DN592B LED26/840 P21PSU D125 WB G2	220-240 V	21.2 W
911401596043	DN592B LED26/830 P22PSD D125 WB G2	220-240 V	21.9 W
911401596143	DN592B LED26/840 P22PSD D125 WB G2	220-240 V	21.9 W
911401596343	DN592X LED26/840 P21WIA D125 WB G2	220-240 V	21.2 W
911401588543	DN588B LED5/930 P4PSU D75 NB G2	220-240 V	4.2 W
911401588643	DN588B LED5/940 P4PSU D75 NB G2	220-240 V	4.2 W
911401588743	DN588B LED5/930 P4PSU D75 MB G2	220-240 V	4.2 W
911401588843	DN588B LED5/940 P4PSU D75 MB G2	220-240 V	4.2 W
911401588943	DN588B LED5/930 P4PSU D75 WB G2	220-240 V	4.2 W
911401589043	DN588B LED5/940 P4PSU D75 WB G2	220-240 V	4.2 W
911401589143	DN589B LED10/930 P8PSU D75 NB G2	220-240 V	8.5 W
911401589243	DN589B LED10/940 P8PSU D75 NB G2	220-240 V	8.5 W
911401589343	DN589B LED10/930 P8PSU D75 MB G2	220-240 V	8.5 W
911401589443	DN589B LED10/940 P8PSU D75 MB G2	220-240 V	8.5 W
911401589543	DN589B LED10/930 P8PSU D75 WB G2	220-240 V	8.5 W
911401589643	DN589B LED10/940 P8PSU D75 WB G2	220-240 V	8.5 W
911401589743	DN590B LED15/930 P14PSU D75 NB G2	220-240 V	13.6 W
911401589843	DN590B LED15/940 P14PSU D75 NB G2	220-240 V	13.6 W
911401589943	DN590B LED15/930 P14PSU D75 MB G2	220-240 V	13.6 W
911401590043	DN590B LED15/940 P14PSU D75 MB G2	220-240 V	13.6 W
911401590143	DN590B LED15/930 P14PSU D75 WB G2	220-240 V	13.6 W
911401590243	DN590B LED15/940 P14PSU D75 WB G2	220-240 V	13.6 W
911401590343	DN590B LED15/930 P14PSD D75 NB G2	220-240 V	14.1 W
911401590443	DN590B LED15/940 P14PSD D75 NB G2	220-240 V	14.1 W

Order Code	Full Product Name	Input Voltage	Power Consumption
911401590543	DN590B LED15/930 P14PSD D75 MB G2	220-240 V	14.1 W
911401590643	DN590B LED15/940 P14PSD D75 MB G2	220-240 V	14.1 W
911401590743	DN590B LED15/930 P14PSD D75 WB G2	220-240 V	14.1 W
911401590843	DN590B LED15/940 P14PSD D75 WB G2	220-240 V	14.1 W
911401590943	DN590X LED15/940 P14WIA D75 NB G2	220-240 V	13.8 W
911401591043	DN590X LED15/940 P14WIA D75 MB G2	220-240 V	13.8 W
911401591143	DN590X LED15/940 P14WIA D75 WB G2	220-240 V	13.8 W
911401502444	DN589B LED12/840 P7PSU D125 VWB-M UE G2	220-240 V	7.5 W
911401592443	DN588B LED9/830 P6PSU D125 VWB-M G2	220-240 V	6.5 W
911401592543	DN588B LED9/840 P6PSU D125 VWB-M G2	220-240 V	6.5 W
911401592843	DN589B LED11/830 P8PSU D125 VWB-M G2	220-240 V	8.3 W
911401592943	DN589B LED11/840 P8PSU D125 VWB-M G2	220-240 V	8.3 W
911401593243	DN589B LED11/830 P8PSD D125 VWB-M G2	220-240 V	8 W
911401593343	DN589B LED11/840 P8PSD D125 VWB-M G2	220-240 V	8 W
911401593643	DN590B LED17/830 P13PSU D125 VWB-M G2	220-240 V	13.3 W
911401593743	DN590B LED17/840 P13PSU D125 VWB-M G2	220-240 V	13.3 W
911401594043	DN590B LED17/830 P14PSD D125 VWB-M G2	220-240 V	13.8 W
911401594143	DN590B LED17/840 P14PSD D125 VWB-M G2	220-240 V	13.8 W
911401594443	DN591B LED22/830 P17PSU D125 VWB-M G2	220-240 V	16.8 W
911401594543	DN591B LED22/840 P17PSU D125 VWB-M G2	220-240 V	16.8 W
911401594843	DN591B LED22/830 P18PSD D125 VWB-M G2	220-240 V	17.7 W
911401594943	DN591B LED22/840 P18PSD D125 VWB-M G2	220-240 V	17.7 W
911401595243	DN591X LED22/840 P17WIA D125 VWB-M G2	220-240 V	17.1 W
911401595443	DN592B LED26/830 P21PSU D125 VWB-M G2	220-240 V	21.2 W
911401595543	DN592B LED26/840 P21PSU D125 VWB-M G2	220-240 V	21.2 W
911401595843	DN592B LED26/830 P22PSD D125 VWB-M G2	220-240 V	21.9 W
911401595943	DN592B LED26/840 P22PSD D125 VWB-M G2	220-240 V	21.9 W
911401596243	DN592X LED26/840 P21WIA D125 VWB-M G2	220-240 V	21.2 W
911401504144	DN594B LED39/TNW P30PSD D200 VWB G2	220 to 240 V	30.3 W
911401504944	DN594B LED36/CED P31PSD D200 VWB G2	220 to 240 V	30.7 W
911401505744	DN594X LED41/TNW P32PSD D200 VWB G2	220 to 240 V	31.6 W
911401506544	DN594X LED38/CED P32PSD D200 VWB G2	220 to 240 V	32 W
911401502644	DN590B LED17/840 P10PSU D150 WB UE G2	220-240 V	10 W
911401503144	DN591B LED23/840 P17PSU D150 WB WP G2	220-240 V	16.8 W
911401503244	DN592B LED27/830 P21PSU D150 WB G2	220-240 V	20.8 W
911401503344	DN592B LED27/840 P21PSU D150 WB G2	220-240 V	20.8 W
911401503844	DN592B LED26/TNW P23PSD D150 WB G2	220 to 240 V	23.1 W
911401504644	DN592B LED24/CED P24PSD D150 WB G2	220 to 240 V	23.5 W
911401505444	DN592X LED29/TNW P25PSD D150 WB G2	220 to 240 V	25.2 W
911401506244	DN592X LED26/CED P26PSD D150 WB G2	220 to 240 V	25.7 W
911401596443	DN589B LED12/830 P8PSU D150 WB G2	220-240 V	8.2 W
911401596543	DN589B LED12/840 P8PSU D150 WB G2	220-240 V	8.2 W

Order Code	Full Product Name	Input Voltage	Power Consumption
911401596643	DN590B LED18/830 P13PSU D150 WB G2	220-240 V	13.1 W
911401596743	DN590B LED18/840 P13PSU D150 WB G2	220-240 V	13.1 W
911401596843	DN591B LED23/830 P17PSU D150 WB G2	220-240 V	16.8 W
911401596943	DN591B LED23/840 P17PSU D150 WB G2	220-240 V	16.8 W
911401597043	DN589B LED12/830 P8PSD D150 WB G2	220-240 V	7.9 W
911401597143	DN589B LED12/840 P8PSD D150 WB G2	220-240 V	7.9 W
911401597243	DN590B LED18/830 P14PSD D150 WB G2	220-240 V	13.6 W
911401597343	DN590B LED18/840 P14PSD D150 WB G2	220-240 V	13.6 W
911401597443	DN591B LED23/830 P17PSD D150 WB G2	220-240 V	17.4 W
911401597543	DN591B LED23/840 P17PSD D150 WB G2	220-240 V	17.4 W
911401597643	DN589X LED12/840 P9WIA D150 WB G2	220-240 V	8.6 W
911401597743	DN592B LED27/830 P22PSD D150 WB G2	220-240 V	21.5 W
911401597843	DN592B LED27/840 P22PSD D150 WB G2	220-240 V	21.5 W
911401597943	DN592X LED27/840 P21WIA D150 WB G2	220-240 V	20.8 W
911401503944	DN592B LED28/TNW P23PSD D150 VWB G2	220 to 240 V	23.1 W
911401504744	DN592B LED26/CED P24PSD D150 VWB G2	220 to 240 V	23.5 W
911401505544	DN592X LED30/TNW P25PSD D150 VWB G2	220 to 240 V	25.2 W
911401506344	DN592X LED28/CED P26PSD D150 VWB G2	220 to 240 V	25.7 W

Controls and Dimming

Order Code	Full Product Name	Dimmable	Maximum dim level
911401502944	DN589B LED10/840 P8PSU D100 WB WP G2	No	-
911401503544	DN589B LED11/TNW P10PSD D100 WB G2	DALI	-
911401504344	DN589B LED10/CED P10PSD D100 WB G2	DALI	-
911401505144	DN589X LED8/TNW P7PSD D100 WB G2	DALI	-
911401505944	DN589X LED7/CED P7PSD D100 WB G2	DALI	-
911401591243	DN588B LED5/930 P4PSU D100 WB G2	No	-
911401591343	DN588B LED5/940 P4PSU D100 WB G2	No	-
911401591443	DN589B LED10/930 P8PSU D100 WB G2	No	-
911401591543	DN589B LED10/940 P8PSU D100 WB G2	No	-
911401591643	DN590B LED16/930 P13PSU D100 WB G2	No	-
911401591743	DN590B LED16/940 P13PSU D100 WB G2	No	-
911401591843	DN589B LED10/930 P8PSD D100 WB G2	Yes	1%
911401591943	DN589B LED10/940 P8PSD D100 WB G2	Yes	1%
911401592043	DN590B LED16/930 P14PSD D100 WB G2	Yes	1%
911401592143	DN590B LED16/940 P14PSD D100 WB G2	Yes	1%
911401592243	DN589X LED10/940 P9WIA D100 WB G2	Yes	3%
911401592343	DN590X LED16/940 P14WIA D100 WB G2	Yes	1%
911401503744	DN591B LED21/TNW P18PSD D125 VWB G2	DALI	-
911401504544	DN591B LED19/CED P18PSD D125 VWB G2	DALI	-
911401505344	DN591X LED17/TNW P13PSD D125 VWB G2	DALI	-
911401506144	DN591X LED15/CED P14PSD D125 VWB G2	DALI	-

Order Code	Full Product Name	Dimmable	Maximum dim level
911401500044	DN596B LED80/830 P62PSU D200 WB G2	No	-
911401500144	DN596B LED80/840 P62PSU D200 WB G2	No	-
911401500444	DN596B LED80/830 P59PSD D200 WB G2	Yes	1%
911401500544	DN596B LED80/840 P59PSD D200 WB G2	Yes	1%
911401500844	DN591B LED19/830 P13PSU D200 WB G2	No	-
911401500944	DN591B LED19/840 P13PSU D200 WB G2	No	-
911401501244	DN591B LED19/830 P13PSD D200 WB G2	Yes	1%
911401501344	DN591B LED19/840 P13PSD D200 WB G2	Yes	1%
911401501544	DN591X LED19/840 P13WIA D200 WB G2	Yes	1%
911401501844	DN593B LED29/830 P20PSU D200 WB G2	No	-
911401501944	DN593B LED29/840 P20PSU D200 WB G2	No	-
911401502244	DN593B LED29/830 P21PSD D200 WB G2	Yes	1%
911401502344	DN593B LED29/840 P21PSD D200 WB G2	Yes	1%
911401502844	DN591B LED23/840 P13PSU D200 WB UE G2	No	-
911401504044	DN594B LED37/TNW P30PSD D200 WB G2	DALI	-
911401504844	DN594B LED34/CED P31PSD D200 WB G2	DALI	-
911401505644	DN594X LED39/TNW P32PSD D200 WB G2	DALI	-
911401506444	DN594X LED36/CED P32PSD D200 WB G2	DALI	-
911401598243	DN594B LED42/830 P30PSU D200 WB G2	No	-
911401598343	DN594B LED42/840 P30PSU D200 WB G2	No	-
911401598643	DN594B LED42/830 P31PSD D200 WB G2	Yes	1%
911401598743	DN594B LED42/840 P31PSD D200 WB G2	Yes	1%
911401598943	DN594X LED42/840 P30WIA D200 WB G2	Yes	1%
911401599243	DN595B LED61/830 P46PSU D200 WB G2	No	-
911401599343	DN595B LED61/840 P46PSU D200 WB G2	No	-
911401599643	DN595B LED61/830 P47PSD D200 WB G2	Yes	1%
911401599743	DN595B LED61/840 P47PSD D200 WB G2	Yes	1%
911401500244	DN596B LED80/830 P59PSD D200 VWB-M G2	Yes	1%
911401500344	DN596B LED80/840 P59PSD D200 VWB-M G2	Yes	1%
911401500644	DN591B LED19/830 P13PSU D200 VWB-M G2	No	-
911401500744	DN591B LED19/840 P13PSU D200 VWB-M G2	No	-
911401501044	DN591B LED19/830 P13PSD D200 VWB-M G2	Yes	1%
911401501144	DN591B LED19/840 P13PSD D200 VWB-M G2	Yes	1%
911401501444	DN591X LED19/840 P13WIA D200 VWB-M G2	Yes	1%
911401501644	DN593B LED29/830 P20PSU D200 VWB-M G2	No	-
911401501744	DN593B LED29/840 P20PSU D200 VWB-M G2	No	-
911401502044	DN593B LED29/830 P21PSD D200 VWB-M G2	Yes	1%
911401502144	DN593B LED29/840 P21PSD D200 VWB-M G2	Yes	1%
911401502744	DN591B LED23/840 P13PSU D200 VWB-M UE G2	No	-
911401598043	DN594B LED42/830 P30PSU D200 VWB-M G2	No	-
911401598143	DN594B LED42/840 P30PSU D200 VWB-M G2	No	-
911401598443	DN594B LED42/830 P31PSD D200 VWB-M G2	Yes	1%

Order Code	Full Product Name	Dimmable	Maximum dim level
911401598543	DN594B LED42/840 P31PSD D200 VWB-M G2	Yes	1%
911401598843	DN594X LED42/840 P30WIA D200 VWB-M G2	Yes	1%
911401599043	DN595B LED61/830 P46PSU D200 VWB-M G2	No	-
911401599143	DN595B LED61/840 P46PSU D200 VWB-M G2	No	-
911401599443	DN595B LED61/830 P47PSD D200 VWB-M G2	Yes	1%
911401599543	DN595B LED61/840 P47PSD D200 VWB-M G2	Yes	1%
911401599843	DN596B LED80/830 P62PSU D200 VWB-M G2	No	-
911401599943	DN596B LED80/840 P62PSU D200 VWB-M G2	No	-
911401502544	DN589B LED12/840 P7PSU D125 WB UE G2	No	-
911401503044	DN590B LED17/840 P13PSU D125 WB WP G2	No	-
911401503644	DN591B LED20/TNW P18PSD D125 WB G2	DALI	-
911401504444	DN591B LED19/CED P18PSD D125 WB G2	DALI	-
911401505244	DN591X LED16/TNW P13PSD D125 WB G2	DALI	-
911401506044	DN591X LED15/CED P14PSD D125 WB G2	DALI	-
911401592643	DN588B LED9/830 P6PSU D125 WB G2	No	-
911401592743	DN588B LED9/840 P6PSU D125 WB G2	No	-
911401593043	DN589B LED11/830 P8PSU D125 WB G2	No	-
911401593143	DN589B LED11/840 P8PSU D125 WB G2	No	-
911401593443	DN589B LED11/830 P8PSD D125 WB G2	Yes	1%
911401593543	DN589B LED11/840 P8PSD D125 WB G2	Yes	1%
911401593843	DN590B LED17/830 P13PSU D125 WB G2	No	-
911401593943	DN590B LED17/840 P13PSU D125 WB G2	No	-
911401594243	DN590B LED17/830 P14PSD D125 WB G2	Yes	1%
911401594343	DN590B LED17/840 P14PSD D125 WB G2	Yes	1%
911401594643	DN591B LED22/830 P17PSU D125 WB G2	No	-
911401594743	DN591B LED22/840 P17PSU D125 WB G2	No	-
911401595043	DN591B LED22/830 P18PSD D125 WB G2	Yes	1%
911401595143	DN591B LED22/840 P18PSD D125 WB G2	Yes	1%
911401595343	DN591X LED22/840 P17WIA D125 WB G2	Yes	1%
911401595643	DN592B LED26/830 P21PSU D125 WB G2	No	-
911401595743	DN592B LED26/840 P21PSU D125 WB G2	No	-
911401596043	DN592B LED26/830 P22PSD D125 WB G2	Yes	1%
911401596143	DN592B LED26/840 P22PSD D125 WB G2	Yes	1%
911401596343	DN592X LED26/840 P21WIA D125 WB G2	Yes	1%
911401588543	DN588B LED5/930 P4PSU D75 NB G2	No	-
911401588643	DN588B LED5/940 P4PSU D75 NB G2	No	-
911401588743	DN588B LED5/930 P4PSU D75 MB G2	No	-
911401588843	DN588B LED5/940 P4PSU D75 MB G2	No	-
911401588943	DN588B LED5/930 P4PSU D75 WB G2	No	-
911401589043	DN588B LED5/940 P4PSU D75 WB G2	No	-
911401589143	DN589B LED10/930 P8PSU D75 NB G2	No	-
911401589243	DN589B LED10/940 P8PSU D75 NB G2	No	-

Order Code	Full Product Name	Dimmable	Maximum dim level
911401589343	DN589B LED10/930 P8PSU D75 MB G2	No	-
911401589443	DN589B LED10/940 P8PSU D75 MB G2	No	-
911401589543	DN589B LED10/930 P8PSU D75 WB G2	No	-
911401589643	DN589B LED10/940 P8PSU D75 WB G2	No	-
911401589743	DN590B LED15/930 P14PSU D75 NB G2	No	-
911401589843	DN590B LED15/940 P14PSU D75 NB G2	No	-
911401589943	DN590B LED15/930 P14PSU D75 MB G2	No	-
911401590043	DN590B LED15/940 P14PSU D75 MB G2	No	-
911401590143	DN590B LED15/930 P14PSU D75 WB G2	No	-
911401590243	DN590B LED15/940 P14PSU D75 WB G2	No	-
911401590343	DN590B LED15/930 P14PSD D75 NB G2	Yes	1%
911401590443	DN590B LED15/940 P14PSD D75 NB G2	Yes	1%
911401590543	DN590B LED15/930 P14PSD D75 MB G2	Yes	1%
911401590643	DN590B LED15/940 P14PSD D75 MB G2	Yes	1%
911401590743	DN590B LED15/930 P14PSD D75 WB G2	Yes	1%
911401590843	DN590B LED15/940 P14PSD D75 WB G2	Yes	1%
911401590943	DN590X LED15/940 P14WIA D75 NB G2	Yes	1%
911401591043	DN590X LED15/940 P14WIA D75 MB G2	Yes	1%
911401591143	DN590X LED15/940 P14WIA D75 WB G2	Yes	1%
911401502444	DN589B LED12/840 P7PSU D125 VWB-M UE G2	No	-
911401592443	DN588B LED9/830 P6PSU D125 VWB-M G2	No	-
911401592543	DN588B LED9/840 P6PSU D125 VWB-M G2	No	-
911401592843	DN589B LED11/830 P8PSU D125 VWB-M G2	No	-
911401592943	DN589B LED11/840 P8PSU D125 VWB-M G2	No	-
911401593243	DN589B LED11/830 P8PSD D125 VWB-M G2	Yes	1%
911401593343	DN589B LED11/840 P8PSD D125 VWB-M G2	Yes	1%
911401593643	DN590B LED17/830 P13PSU D125 VWB-M G2	No	-
911401593743	DN590B LED17/840 P13PSU D125 VWB-M G2	No	-
911401594043	DN590B LED17/830 P14PSD D125 VWB-M G2	Yes	1%
911401594143	DN590B LED17/840 P14PSD D125 VWB-M G2	Yes	1%
911401594443	DN591B LED22/830 P17PSU D125 VWB-M G2	No	-
911401594543	DN591B LED22/840 P17PSU D125 VWB-M G2	No	-
911401594843	DN591B LED22/830 P18PSD D125 VWB-M G2	Yes	1%
911401594943	DN591B LED22/840 P18PSD D125 VWB-M G2	Yes	1%
911401595243	DN591X LED22/840 P17WIA D125 VWB-M G2	Yes	1%
911401595443	DN592B LED26/830 P21PSU D125 VWB-M G2	No	-
911401595543	DN592B LED26/840 P21PSU D125 VWB-M G2	No	-
911401595843	DN592B LED26/830 P22PSD D125 VWB-M G2	Yes	1%
911401595943	DN592B LED26/840 P22PSD D125 VWB-M G2	Yes	1%
911401596243	DN592X LED26/840 P21WIA D125 VWB-M G2	Yes	1%
911401504144	DN594B LED39/TNW P30PSD D200 VWB G2	DALI	-
911401504944	DN594B LED36/CED P31PSD D200 VWB G2	DALI	-

Order Code	Full Product Name	Dimmable	Maximum dim level
911401505744	DN594X LED41/TNW P32PSD D200 VWB G2	DALI	-
911401506544	DN594X LED38/CED P32PSD D200 VWB G2	DALI	-
911401502644	DN590B LED17/840 P10PSU D150 WB UE G2	No	-
911401503144	DN591B LED23/840 P17PSU D150 WB WP G2	No	-
911401503244	DN592B LED27/830 P21PSU D150 WB G2	No	-
911401503344	DN592B LED27/840 P21PSU D150 WB G2	No	-
911401503844	DN592B LED26/TNW P23PSD D150 WB G2	DALI	-
911401504644	DN592B LED24/CED P24PSD D150 WB G2	DALI	-
911401505444	DN592X LED29/TNW P25PSD D150 WB G2	DALI	-
911401506244	DN592X LED26/CED P26PSD D150 WB G2	DALI	-
911401596443	DN589B LED12/830 P8PSU D150 WB G2	No	-
911401596543	DN589B LED12/840 P8PSU D150 WB G2	No	-
911401596643	DN590B LED18/830 P13PSU D150 WB G2	No	-
911401596743	DN590B LED18/840 P13PSU D150 WB G2	No	-
911401596843	DN591B LED23/830 P17PSU D150 WB G2	No	-
911401596943	DN591B LED23/840 P17PSU D150 WB G2	No	-
911401597043	DN589B LED12/830 P8PSD D150 WB G2	Yes	1%
911401597143	DN589B LED12/840 P8PSD D150 WB G2	Yes	1%
911401597243	DN590B LED18/830 P14PSD D150 WB G2	Yes	1%
911401597343	DN590B LED18/840 P14PSD D150 WB G2	Yes	1%
911401597443	DN591B LED23/830 P17PSD D150 WB G2	Yes	1%
911401597543	DN591B LED23/840 P17PSD D150 WB G2	Yes	1%
911401597643	DN589X LED12/840 P9WIA D150 WB G2	Yes	3%
911401597743	DN592B LED27/830 P22PSD D150 WB G2	Yes	1%
911401597843	DN592B LED27/840 P22PSD D150 WB G2	Yes	1%
911401597943	DN592X LED27/840 P21WIA D150 WB G2	Yes	1%
911401503944	DN592B LED28/TNW P23PSD D150 VWB G2	DALI	-
911401504744	DN592B LED26/CED P24PSD D150 VWB G2	DALI	-
911401505544	DN592X LED30/TNW P25PSD D150 VWB G2	DALI	-
911401506344	DN592X LED28/CED P26PSD D150 VWB G2	DALI	-

Mechanical and Housing

Order Code	Full Product Name	Ingress protection code
911401502944	DN589B LED10/840 P8PSU D100 WB WP G2	IP20(IP65 front)
911401503544	DN589B LED11/TNW P10PSD D100 WB G2	IP20
911401504344	DN589B LED10/CED P10PSD D100 WB G2	IP20
911401505144	DN589X LED8/TNW P7PSD D100 WB G2	IP20
911401505944	DN589X LED7/CED P7PSD D100 WB G2	IP20
911401591243	DN588B LED5/930 P4PSU D100 WB G2	IP20
911401591343	DN588B LED5/940 P4PSU D100 WB G2	IP20
911401591443	DN589B LED10/930 P8PSU D100 WB G2	IP20
911401591543	DN589B LED10/940 P8PSU D100 WB G2	IP20

Order Code	Full Product Name	Ingress protection code
911401591643	DN590B LED16/930 P13PSU D100 WB G2	IP20
911401591743	DN590B LED16/940 P13PSU D100 WB G2	IP20
911401591843	DN589B LED10/930 P8PSD D100 WB G2	IP20
911401591943	DN589B LED10/940 P8PSD D100 WB G2	IP20
911401592043	DN590B LED16/930 P14PSD D100 WB G2	IP20
911401592143	DN590B LED16/940 P14PSD D100 WB G2	IP20
911401592243	DN589X LED10/940 P9WIA D100 WB G2	IP20
911401592343	DN590X LED16/940 P14WIA D100 WB G2	IP20
911401503744	DN591B LED21/TNW P18PSD D125 VWB G2	IP20
911401504544	DN591B LED19/CED P18PSD D125 VWB G2	IP20
911401505344	DN591X LED17/TNW P13PSD D125 VWB G2	IP20
911401506144	DN591X LED15/CED P14PSD D125 VWB G2	IP20
911401500044	DN596B LED80/830 P62PSU D200 WB G2	IP20
911401500144	DN596B LED80/840 P62PSU D200 WB G2	IP20
911401500444	DN596B LED80/830 P59PSD D200 WB G2	IP20
911401500544	DN596B LED80/840 P59PSD D200 WB G2	IP20
911401500844	DN591B LED19/830 P13PSU D200 WB G2	IP20
911401500944	DN591B LED19/840 P13PSU D200 WB G2	IP20
911401501244	DN591B LED19/830 P13PSD D200 WB G2	IP20
911401501344	DN591B LED19/840 P13PSD D200 WB G2	IP20
911401501544	DN591X LED19/840 P13WIA D200 WB G2	IP20
911401501844	DN593B LED29/830 P20PSU D200 WB G2	IP20
911401501944	DN593B LED29/840 P20PSU D200 WB G2	IP20
911401502244	DN593B LED29/830 P21PSD D200 WB G2	IP20
911401502344	DN593B LED29/840 P21PSD D200 WB G2	IP20
911401502844	DN591B LED23/840 P13PSU D200 WB UE G2	IP20
911401504044	DN594B LED37/TNW P30PSD D200 WB G2	IP20
911401504844	DN594B LED34/CED P31PSD D200 WB G2	IP20
911401505644	DN594X LED39/TNW P32PSD D200 WB G2	IP20
911401506444	DN594X LED36/CED P32PSD D200 WB G2	IP20
911401598243	DN594B LED42/830 P30PSU D200 WB G2	IP20
911401598343	DN594B LED42/840 P30PSU D200 WB G2	IP20
911401598643	DN594B LED42/830 P31PSD D200 WB G2	IP20
911401598743	DN594B LED42/840 P31PSD D200 WB G2	IP20
911401598943	DN594X LED42/840 P30WIA D200 WB G2	IP20
911401599243	DN595B LED61/830 P46PSU D200 WB G2	IP20
911401599343	DN595B LED61/840 P46PSU D200 WB G2	IP20
911401599643	DN595B LED61/830 P47PSD D200 WB G2	IP20
911401599743	DN595B LED61/840 P47PSD D200 WB G2	IP20
911401500244	DN596B LED80/830 P59PSD D200 VWB-M G2	IP20
911401500344	DN596B LED80/840 P59PSD D200 VWB-M G2	IP20
911401500644	DN591B LED19/830 P13PSU D200 VWB-M G2	IP20

Order Code	Full Product Name	Ingress protection code
911401500744	DN591B LED19/840 P13PSU D200 VWB-M G2	IP20
911401501044	DN591B LED19/830 P13PSD D200 VWB-M G2	IP20
911401501144	DN591B LED19/840 P13PSD D200 VWB-M G2	IP20
911401501444	DN591X LED19/840 P13WIA D200 VWB-M G2	IP20
911401501644	DN593B LED29/830 P20PSU D200 VWB-M G2	IP20
911401501744	DN593B LED29/840 P20PSU D200 VWB-M G2	IP20
911401502044	DN593B LED29/830 P21PSD D200 VWB-M G2	IP20
911401502144	DN593B LED29/840 P21PSD D200 VWB-M G2	IP20
911401502744	DN591B LED23/840 P13PSU D200 VWB-M UE G2	IP20
911401598043	DN594B LED42/830 P30PSU D200 VWB-M G2	IP20
911401598143	DN594B LED42/840 P30PSU D200 VWB-M G2	IP20
911401598443	DN594B LED42/830 P31PSD D200 VWB-M G2	IP20
911401598543	DN594B LED42/840 P31PSD D200 VWB-M G2	IP20
911401598843	DN594X LED42/840 P30WIA D200 VWB-M G2	IP20
911401599043	DN595B LED61/830 P46PSU D200 VWB-M G2	IP20
911401599143	DN595B LED61/840 P46PSU D200 VWB-M G2	IP20
911401599443	DN595B LED61/830 P47PSD D200 VWB-M G2	IP20
911401599543	DN595B LED61/840 P47PSD D200 VWB-M G2	IP20
911401599843	DN596B LED80/830 P62PSU D200 VWB-M G2	IP20
911401599943	DN596B LED80/840 P62PSU D200 VWB-M G2	IP20
911401502544	DN589B LED12/840 P7PSU D125 WB UE G2	IP20
911401503044	DN590B LED17/840 P13PSU D125 WB WP G2	IP20(IP65 front)
911401503644	DN591B LED20/TNW P18PSD D125 WB G2	IP20
911401504444	DN591B LED19/CED P18PSD D125 WB G2	IP20
911401505244	DN591X LED16/TNW P13PSD D125 WB G2	IP20
911401506044	DN591X LED15/CED P14PSD D125 WB G2	IP20
911401592643	DN588B LED9/830 P6PSU D125 WB G2	IP20
911401592743	DN588B LED9/840 P6PSU D125 WB G2	IP20
911401593043	DN589B LED11/830 P8PSU D125 WB G2	IP20
911401593143	DN589B LED11/840 P8PSU D125 WB G2	IP20
911401593443	DN589B LED11/830 P8PSD D125 WB G2	IP20
911401593543	DN589B LED11/840 P8PSD D125 WB G2	IP20
911401593843	DN590B LED17/830 P13PSU D125 WB G2	IP20
911401593943	DN590B LED17/840 P13PSU D125 WB G2	IP20
911401594243	DN590B LED17/830 P14PSD D125 WB G2	IP20
911401594343	DN590B LED17/840 P14PSD D125 WB G2	IP20
911401594643	DN591B LED22/830 P17PSU D125 WB G2	IP20
911401594743	DN591B LED22/840 P17PSU D125 WB G2	IP20
911401595043	DN591B LED22/830 P18PSD D125 WB G2	IP20
911401595143	DN591B LED22/840 P18PSD D125 WB G2	IP20
911401595343	DN591X LED22/840 P17WIA D125 WB G2	IP20
911401595643	DN592B LED26/830 P21PSU D125 WB G2	IP20

Order Code	Full Product Name	Ingress protection code
911401595743	DN592B LED26/840 P21PSU D125 WB G2	IP20
911401596043	DN592B LED26/830 P22PSD D125 WB G2	IP20
911401596143	DN592B LED26/840 P22PSD D125 WB G2	IP20
911401596343	DN592X LED26/840 P21WIA D125 WB G2	IP20
911401588543	DN588B LED5/930 P4PSU D75 NB G2	IP20
911401588643	DN588B LED5/940 P4PSU D75 NB G2	IP20
911401588743	DN588B LED5/930 P4PSU D75 MB G2	IP20
911401588843	DN588B LED5/940 P4PSU D75 MB G2	IP20
911401588943	DN588B LED5/930 P4PSU D75 WB G2	IP20
911401589043	DN588B LED5/940 P4PSU D75 WB G2	IP20
911401589143	DN589B LED10/930 P8PSU D75 NB G2	IP20
911401589243	DN589B LED10/940 P8PSU D75 NB G2	IP20
911401589343	DN589B LED10/930 P8PSU D75 MB G2	IP20
911401589443	DN589B LED10/940 P8PSU D75 MB G2	IP20
911401589543	DN589B LED10/930 P8PSU D75 WB G2	IP20
911401589643	DN589B LED10/940 P8PSU D75 WB G2	IP20
911401589743	DN590B LED15/930 P14PSU D75 NB G2	IP20
911401589843	DN590B LED15/940 P14PSU D75 NB G2	IP20
911401589943	DN590B LED15/930 P14PSU D75 MB G2	IP20
911401590043	DN590B LED15/940 P14PSU D75 MB G2	IP20
911401590143	DN590B LED15/930 P14PSU D75 WB G2	IP20
911401590243	DN590B LED15/940 P14PSU D75 WB G2	IP20
911401590343	DN590B LED15/930 P14PSD D75 NB G2	IP20
911401590443	DN590B LED15/940 P14PSD D75 NB G2	IP20
911401590543	DN590B LED15/930 P14PSD D75 MB G2	IP20
911401590643	DN590B LED15/940 P14PSD D75 MB G2	IP20
911401590743	DN590B LED15/930 P14PSD D75 WB G2	IP20
911401590843	DN590B LED15/940 P14PSD D75 WB G2	IP20
911401590943	DN590X LED15/940 P14WIA D75 NB G2	IP20
911401591043	DN590X LED15/940 P14WIA D75 MB G2	IP20
911401591143	DN590X LED15/940 P14WIA D75 WB G2	IP20
911401502444	DN589B LED12/840 P7PSU D125 VWB-M UE G2	IP20
911401592443	DN588B LED9/830 P6PSU D125 VWB-M G2	IP20
911401592543	DN588B LED9/840 P6PSU D125 VWB-M G2	IP20
911401592843	DN589B LED11/830 P8PSU D125 VWB-M G2	IP20
911401592943	DN589B LED11/840 P8PSU D125 VWB-M G2	IP20
911401593243	DN589B LED11/830 P8PSD D125 VWB-M G2	IP20
911401593343	DN589B LED11/840 P8PSD D125 VWB-M G2	IP20
911401593643	DN590B LED17/830 P13PSU D125 VWB-M G2	IP20
911401593743	DN590B LED17/840 P13PSU D125 VWB-M G2	IP20
911401594043	DN590B LED17/830 P14PSD D125 VWB-M G2	IP20
911401594143	DN590B LED17/840 P14PSD D125 VWB-M G2	IP20

Order Code	Full Product Name	Ingress protection code
911401594443	DN591B LED22/830 P17PSU D125 VWB-M G2	IP20
911401594543	DN591B LED22/840 P17PSU D125 VWB-M G2	IP20
911401594843	DN591B LED22/830 P18PSD D125 VWB-M G2	IP20
911401594943	DN591B LED22/840 P18PSD D125 VWB-M G2	IP20
911401595243	DN591X LED22/840 P17WIA D125 VWB-M G2	IP20
911401595443	DN592B LED26/830 P21PSU D125 VWB-M G2	IP20
911401595543	DN592B LED26/840 P21PSU D125 VWB-M G2	IP20
911401595843	DN592B LED26/830 P22PSD D125 VWB-M G2	IP20
911401595943	DN592B LED26/840 P22PSD D125 VWB-M G2	IP20
911401596243	DN592X LED26/840 P21WIA D125 VWB-M G2	IP20
911401504144	DN594B LED39/TNW P30PSD D200 VWB G2	IP20
911401504944	DN594B LED36/CED P31PSD D200 VWB G2	IP20
911401505744	DN594X LED41/TNW P32PSD D200 VWB G2	IP20
911401506544	DN594X LED38/CED P32PSD D200 VWB G2	IP20
911401502644	DN590B LED17/840 P10PSU D150 WB UE G2	IP20
911401503144	DN591B LED23/840 P17PSU D150 WB WP G2	IP20(IP65 front)
911401503244	DN592B LED27/830 P21PSU D150 WB G2	IP20
911401503344	DN592B LED27/840 P21PSU D150 WB G2	IP20
911401503844	DN592B LED26/TNW P23PSD D150 WB G2	IP20
911401504644	DN592B LED24/CED P24PSD D150 WB G2	IP20
911401505444	DN592X LED29/TNW P25PSD D150 WB G2	IP20
911401506244	DN592X LED26/CED P26PSD D150 WB G2	IP20
911401596443	DN589B LED12/830 P8PSU D150 WB G2	IP20
911401596543	DN589B LED12/840 P8PSU D150 WB G2	IP20
911401596643	DN590B LED18/830 P13PSU D150 WB G2	IP20
911401596743	DN590B LED18/840 P13PSU D150 WB G2	IP20
911401596843	DN591B LED23/830 P17PSU D150 WB G2	IP20
911401596943	DN591B LED23/840 P17PSU D150 WB G2	IP20
911401597043	DN589B LED12/830 P8PSD D150 WB G2	IP20
911401597143	DN589B LED12/840 P8PSD D150 WB G2	IP20
911401597243	DN590B LED18/830 P14PSD D150 WB G2	IP20
911401597343	DN590B LED18/840 P14PSD D150 WB G2	IP20
911401597443	DN591B LED23/830 P17PSD D150 WB G2	IP20
911401597543	DN591B LED23/840 P17PSD D150 WB G2	IP20
911401597643	DN589X LED12/840 P9WIA D150 WB G2	IP20
911401597743	DN592B LED27/830 P22PSD D150 WB G2	IP20
911401597843	DN592B LED27/840 P22PSD D150 WB G2	IP20
911401597943	DN592X LED27/840 P21WIA D150 WB G2	IP20
911401503944	DN592B LED28/TNW P23PSD D150 VWB G2	IP20
911401504744	DN592B LED26/CED P24PSD D150 VWB G2	IP20
911401505544	DN592X LED30/TNW P25PSD D150 VWB G2	IP20
911401506344	DN592X LED28/CED P26PSD D150 VWB G2	IP20

© 2026 Signify Holding. All rights reserved. The information provided herein is subject to change, without notice. Signify does not give any representation or warranty as to the accuracy or completeness of the information included herein and shall not be liable for any action in reliance thereon. The information presented in this document is not intended as any commercial offer and does not form part of any quotation or contract, unless otherwise agreed by Signify. Philips and the Philips Shield Emblem are registered trademarks of Koninklijke Philips N.V.