PHILIPS

Maxos fusion Office

SM970X



Maxos fusion Office: Flexible solution delivers ideal light output

Maxos fusion is an adaptable LED trunk mounted luminaire that offers an excellent quality of light. It’s an efficient and flexible lighting solution that can be used in a variety of applications including industrial, commercial and office environments, offering a range of lighting options to meet different requirements.With the freedom to position these fixtures as required and the integration of other services/third-party hardware, the system allows you to reduce ceiling clutter. It can also be easily re-configured to accommodate future lay-out changes. The infrastructure is enabled to integrate sensors for data collection, giving you the opportunity to use insightful granular information to support your business.

Benefits

- A flexible office, with application flexibility to the choice of luminaires to fit many office areas.
- Future ready: scalable and ready to be connected to controls and lighting systems.
- Homogenous and uniform light effect
- Ready to be connected to software-based lighting systems such as Interact Office
- Easy to order, assemble and install.
- Consistent light quality with direct/indirect wide beam option
- Comes with Environmental Product Declaration (EPD)

Applications

- Offices
- Education
- Retail
- The product is IP20 and, as such, is not protected against water ingress. Therefore, we strongly recommend that the environment in which the luminaire is to be installed is suitably checked.
- If the above advice is not taken and the luminaires are subject to water ingress, Philips / Signify cannot guarantee safe failure and the product warranty will become void

Features

- Fully office compliant (UGR <19, L65< 3000cd/m2), light level according to office application requirements
- Best-in-class efficacy > 140 lm/W

Versions

Maxos fusion Office RTP



Maxos fusion Office RTP



Maxos fusion Office RTP 2

Dimensional drawing

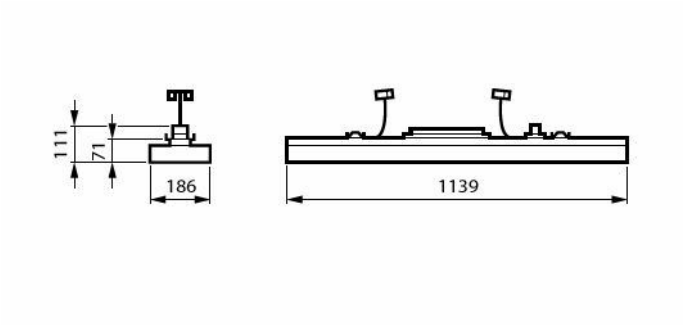

SM970X 45S/840 DIA D/I MXO W19L114 WH

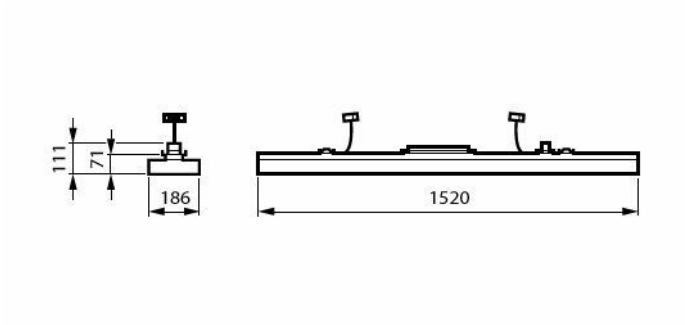

SM970X 56S/840 DIA D/I MXO W19L152 WH

Product details



Maxos fusion Office DPP optics



Maxos fusion Office DPP optics



Maxos fusion Office DPP 1



Maxos fusion Office DPP 2

General Information

Number of gear units	1 unit
Driver included	Yes
Service tag	Yes

Light Technical

Correlated Color Temperature (Nom)	4000 K
Color rendering index (CRI)	>80
Optic type	Wide beam

Operating and Electrical

Input Voltage	220 to 240 V
Line Frequency	50 to 60 Hz
Suitable for random switching	Yes
Protection class IEC	Safety class I

Controls and Dimming

Dimmable	Yes
Maximum dim level	1%

Mechanical and Housing

Housing Color	White
Ingress protection code	IP20 [Finger-protected]
Mech. impact protection code	IK03 [0.3 J]

Approval and Application

Glow-wire test	Temperature 650 °C, duration 30 s
Flammability mark	For mounting on normally flammable surfaces
CE mark	Yes
ENEC mark	-
Flickering value (PstLM) - Flickering value as per EN 61000-3-3	1
Ambient temperature range	0 to +35 °C

Initial Performance (IEC Compliant)

Luminous flux tolerance	+/-10%
Initial chromaticity	(0.38, 0.38) SDCM <3

Product Data

Product family code	SM970X [Maxos fusion Office]

Light Technical

Order Code	Full Product Name	Luminous Flux	Luminous Efficacy (rated) (Nom)
910505103994	SM970X 45S/840 DIA D/I MXO W19L114 WH	4,500 lm	141 lm/W
910505103995	SM970X 56S/840 DIA D/I MXO W19L152 WH	5,600 lm	144 lm/W

Operating and Electrical

Order Code	Full Product Name	Power Consumption
910505103994	SM970X 45S/840 DIA D/I MXO W19L114 WH	32 W
910505103995	SM970X 56S/840 DIA D/I MXO W19L152 WH	39 W

© 2026 Signify Holding. All rights reserved. The information provided herein is subject to change, without notice. Signify does not give any representation or warranty as to the accuracy or completeness of the information included herein and shall not be liable for any action in reliance thereon. The information presented in this document is not intended as any commercial offer and does not form part of any quotation or contract, unless otherwise agreed by Signify. Philips and the Philips Shield Emblem are registered trademarks of Koninklijke Philips N.V.