PHILIPS

BN098 G2 LED5/NW L300 100-240V

911401814884



SmartBright T5 Batten G2, 4.5 W, 450 lm, 4000 K

BN098 G2 Batten with solid and slim polycarbonate housing, can applied in the narrow grooves. With 3 CCTs and 4 different sizes and lumen packages for flexible combinations.

General Information

Light source engine type	LED
Value ladder	Value

Light Technical

Luminous Flux	450 lm
Correlated Color Temperature (Nom)	4000 K
Luminous Efficacy (rated) (Nom)	100 lm/W
Color rendering index (CRI)	>80
Light source color	White
Effective projected area	0.00715 m^2

Operating and Electrical

Input Voltage	220 to 240 V
Line Frequency	50 or 60 Hz
Inrush current	6.53 A
Power Consumption	4.5 W
Power Factor (Fraction)	0.4
Number of products on MCB of 16 A type B	12
Protection class IEC	Safety class II

Controls and Dimming

Dimmable	No
Control interface	-

Mechanical and Housing

Housing Material	Polycarbonate
Optical cover material	Polycarbonate

Housing Color	White
Optical cover finish	Opal
Overall length	325 mm
Overall width	22 mm
Overall height	34 mm
Dimensions (Height x Width x Depth)	34 x 22 x 325 mm
Ingress protection code	IP20 [Finger-protected]
Mech. impact protection code	IK03 [0.3 J]
Optical cover type	-
Net Weight (Piece)	0.092 kg

Approval and Application

Flammability mark	For mounting on normally flammable surfaces
CE mark	No
Ambient temperature range	-10 to +40 °C

Initial Performance (IEC Compliant)

Luminous flux tolerance	+/-10%
Initial chromaticity	(0.38, 0.38), SDCM≤6
Power consumption tolerance	+/-10%

Dimensional drawing

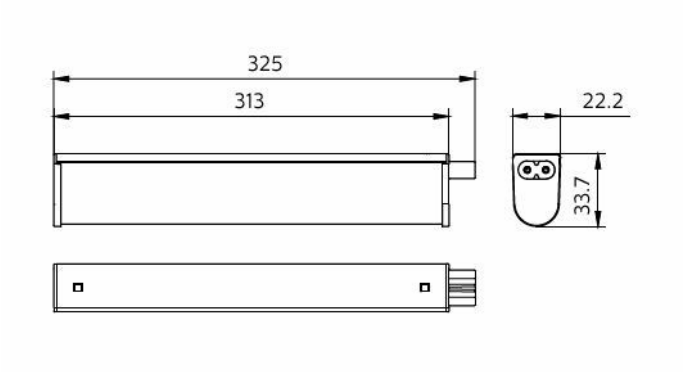

Product Data

Order product name	BN098 G2 LED5/NW L300 100-240V
Full product name	BN098 G2 LED5/NW L300 100-240V
Full product code	871951493948699
Order code	911401814884
Material Nr. (12NC)	911401814884
Numerator - Quantity Per Pack	1
EAN/UPC - Product/Case	8719514939486
Numerator - Packs per outer box	24
EAN/UPC - Case	8719514939967

Related Documents

Documents and certificates	Document Name	Download
Installation Instructions	MI-BN098C G2.pdf	Download

Photometry and lighting design	Document Name	Download
IES File	BN098 G2 LED5NW L300 100-240V.IES	Download

© 2026 Signify Holding. All rights reserved. The information provided herein is subject to change, without notice. Signify does not give any representation or warranty as to the accuracy or completeness of the information included herein and shall not be liable for any action in reliance thereon. The information presented in this document is not intended as any commercial offer and does not form part of any quotation or contract, unless otherwise agreed by Signify. Philips and the Philips Shield Emblem are registered trademarks of Koninklijke Philips N.V.