Signify

ClassicStreet brackets

JGB794



ClassicStreet - Echoing the past, shaped for the future

Recalling the iconic beauty of 20th-century street lanterns, ClassicStreet combines elegant design with the subtle details of heritage luminaires while meeting today's urban lighting requirements. Though echoing the past, the ClassicStreet luminaire is very much shaped for the future. Its gently curved design, together with dedicated brackets and poles, creates a contemporary look that beautifies our cities and creates distinctive and warm night- and daytime ambiences. Not only in historical and traditional architectural settings, but also in more modern urban environments too. Designed around its LED engine, ClassicStreet delivers outstanding levels of lighting and energy performance.

Benefits

- Distinctive contemporary design inspired by classical complete street-lighting sets
- Fits both traditional and historical architectural settings as well as more modern environments
- Dedicated interfaces with ClassicStreet luminaire for optimum design integration and installation

Applications

- City centers
- Roads and streets
- Residential areas
- Parks and plazas

Features

- Available in post-top and suspended versions
- Dedicated ClassicStreet brackets and poles
- Compatible with all Signify standard and advanced public lighting systems
- Optimized optics to deliver efficient and comfortable lighting levels

Versions



ClassicStreet brackets- JGB794 MBP-S 60P



ClassicStreet brackets- JGB794 MBP-S 76P



ClassicStreet brackets- JGB794 MBP-T 60P



ClassicStreet brackets- JGB794 MBP-T 76P



ClassicStreet brackets- JGB794 MBW



ClassicStreet brackets- JGB795 MBP-S 60P



ClassicStreet brackets- JGB795 MBP-S 76P



ClassicStreet brackets- JGB795 MBP-T 60P

ClassicStreet brackets-
JGB795 MBP-T 76P



ClassicStreet brackets-
JGB795 MBW



Dimensional drawing

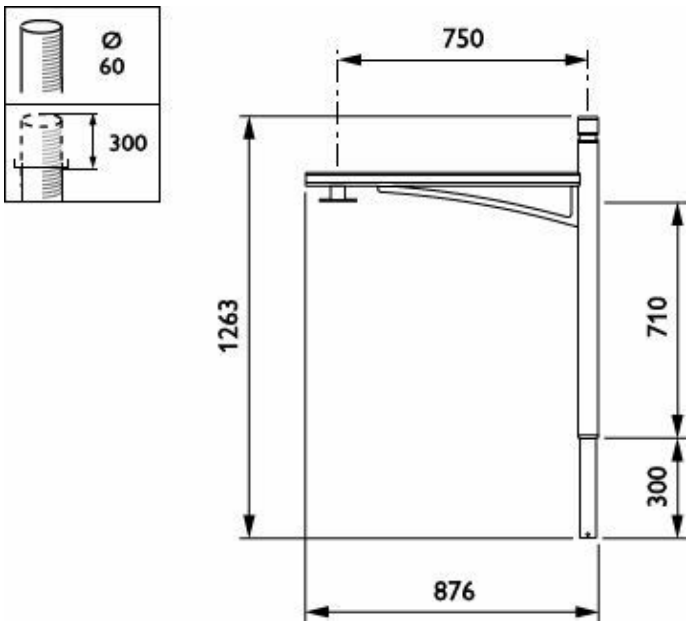

JGB794 MBP-S 60

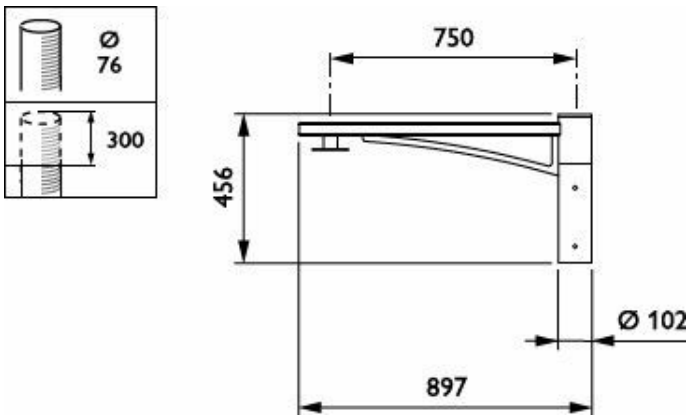

JGB794 MBP-S 76

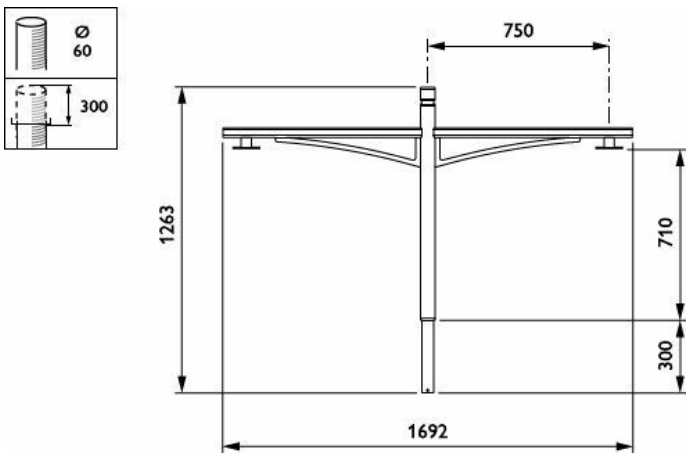

JGB794 MBP-T 60

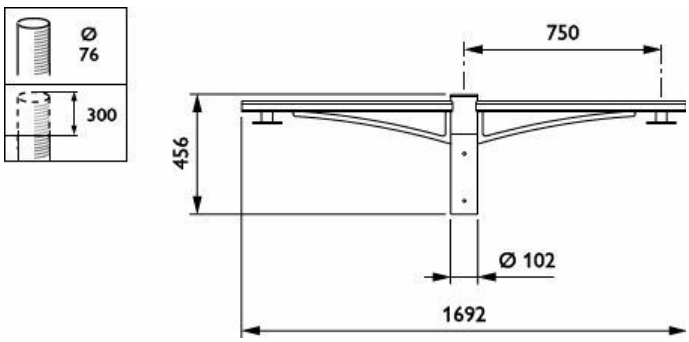

JGB794 MBP-T 76

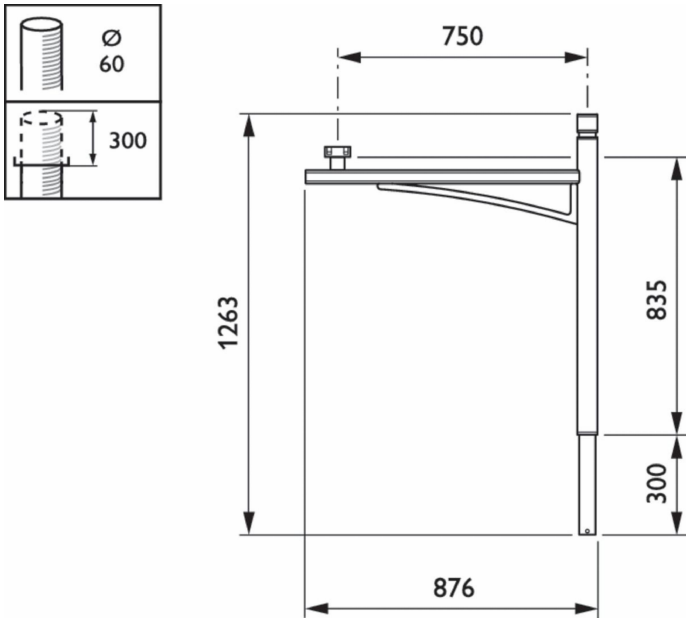

JGB795 MBP-S 60

JGB794 MBW

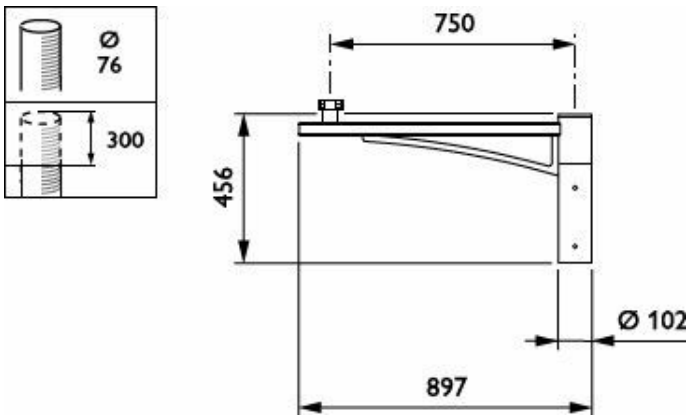

JGB795 MBP-S 76

JGB795 MBP-T 60

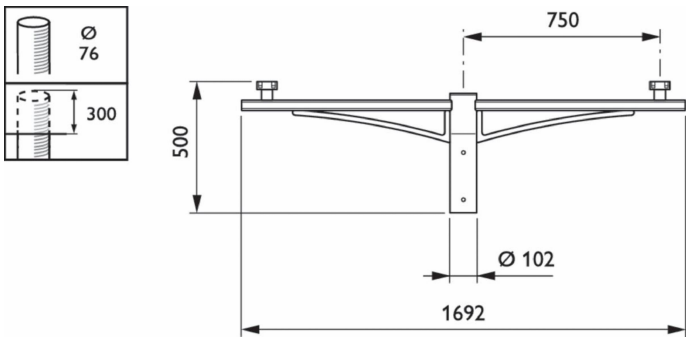

JGB795 MBP-T 76

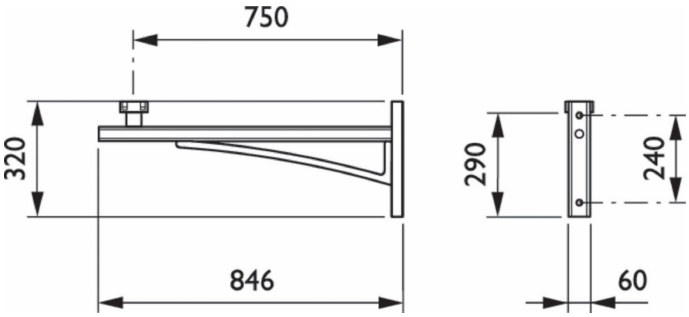

JGB795 MBW

Product details

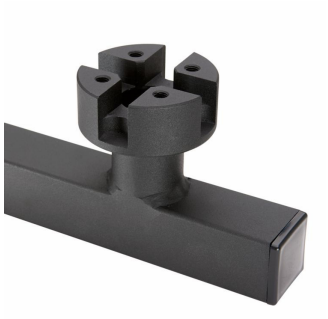

ClassicStreet_brackets-JGB795-DP05



ClassicStreet_brackets-JGB794-DP06



Tenon and cap versions



Suspended and post top versions

Approval and Application

CE mark	Yes

Product Data

Order Code	Full Product Name	Product family code
912300023368	JGB794 MBP-S 750 60 BK	JGB794
912300023374	JGB794 MBP-S 750 76 BK	JGB794
912300023369	JGB794 MBP-T 750 60 BK	JGB794
912300023375	JGB794 MBP-T 750 76 BK	JGB794
912300023370	JGB794 MBW 750 BK	JGB794

Order Code	Full Product Name	Product family code
912300023371	JGB795 MBP-S 750 60 BK	JGB795
912300023376	JGB795 MBP-S 750 76 BK	JGB795
912300023372	JGB795 MBP-T 750 60 BK	JGB795
912300023377	JGB795 MBP-T 750 76 BK	JGB795
912300023373	JGB795 MBW 750 BK	JGB795

© 2026 Signify Holding. All rights reserved. The information provided herein is subject to change, without notice. Signify does not give any representation or warranty as to the accuracy or completeness of the information included herein and shall not be liable for any action in reliance thereon. The information presented in this document is not intended as any commercial offer and does not form part of any quotation or contract, unless otherwise agreed by Signify. All trademarks are owned by Signify Holding or their respective owners.