PHILIPS

PowerBalance G4

7666168



Create comfort and satisfaction for your office

PowerBalance G4 (RC650 range) is a complete office lighting family which creates a modern, flexible, and comfortable environment that fosters creativity and innovation. It provides multiple control options (Interact office, Interact pro, POE) to make your office energy efficient and easy to manage.

Benefits

- Nice and creative outlook design to fit different office application environments
- Multiple control interfaces to fit high end office lighting solutions
- High lm/w to offer better energy saving

Applications

- Office lighting

Features

- High energy efficacy at 136lm/w
- CRI90- Conformity to WELL
- Multiple control interface available

Versions



PowerBalance G4

PowerBalance G4

RTP-OF-PowerBalance-G4-RC650B-W60L60



RTP-OF-PowerBalance-G4-RC650B-W30L120

Dimensional drawing

RC650X LED40/840 W30L120 SIA S15 CAU

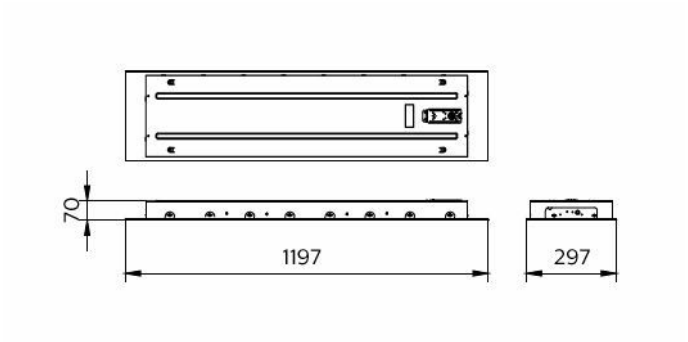

PowerBalance G4

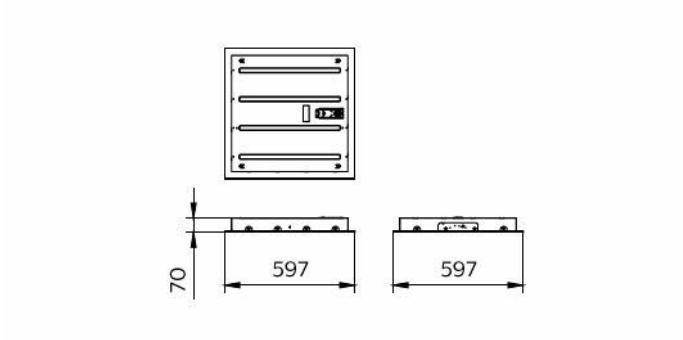

PowerBalance G4

RC650X LED48/840 W60L60 WIA

General Information

Number of gear units	1 unit
Gear	-
Driver included	Yes
Service tag	Yes

Light Technical

Number of light sources	4

Operating and Electrical

Line Frequency	50 or 60 Hz

Mechanical and Housing

Housing Color	White
Ingress protection code	IP20 [Finger-protected]
Mech. impact protection code	IK03 [0.3 J]

Approval and Application

Glow-wire test	Temperature 650 °C, duration 30 s
CE mark	Yes
ENEC mark	-
Ambient temperature range	-20 to +40 °C

Initial Performance (IEC Compliant)

Initial chromaticity	SDCM<3

Over Time Performance (IEC Compliant)

Median useful life L80B50	50,000 hour(s)

Light Technical

Order Code	Full Product Name	Luminous Flux	Correlated Color Temperature (Nom)	Luminous Efficacy (rated) (Nom)	Color rendering index (CRI)	Beam angle of light source	Optic type
911401548861	RC650B LED40S865 PSU W30L120	4,100 lm	6500 K	142.9 lm/W	>80	120 degree(s)	Reflector
911401549061	RC650B LED40S840 PSU W30L120	4,100 lm	4000 K	142.9 lm/W	>80	120 degree(s)	Reflector
911401549161	RC650B LED40S840 PSD W30L120	4,100 lm	4000 K	140.4 lm/W	>80	120 degree(s)	Reflector
911401556761	RC650B LED40S940 PSD W30L120	3,950 lm	4000 K	135.3 lm/W	>90	120 degree(s)	Reflector
911401557961	RC650B LED40S9 TWH W30L120	3,950 lm	-	131.7 lm/W	>90	120 degree(s)	Reflector
911401558361	RC650B LED40S940 PSD W30L120 CAU	3,950 lm	4000 K	135.3 lm/W	>90	120 degree(s)	Reflector
911401548461	RC650B LED40S865 PSU W60L60	4,100 lm	6500 K	142.9 lm/W	>80	120 degree(s)	Reflector
911401548661	RC650B LED40S840 PSU W60L60	4,100 lm	4000 K	142.9 lm/W	>80	120 degree(s)	Reflector
911401548761	RC650B LED40S840 PSD W60L60	4,100 lm	4000 K	140.4 lm/W	>80	120 degree(s)	Reflector
911401549761	RC650B LED40S840 PSU W60L60 TWN	4,855 lm	4000 K	138.7 lm/W	>80	120 degree(s)	Reflector
911401554061	RC650B LED40S8 TWH W60L60	4,100 lm	-	136.7 lm/W	>80	120 degree(s)	Reflector
911401557861	RC650B LED40S9 TWH W60L60	3,950 lm	-	131.7 lm/W	>90	120 degree(s)	Reflector
911401558161	RC650B LED40S940 PSD W60L60 CAU	3,950 lm	4000 K	135.3 lm/W	>90	120 degree(s)	Reflector
911401580161	RC650B LED40S965 PSD W60L60	3,950 lm	6500 K	135.3 lm/W	>90	120 degree(s)	Reflector
911401561546	RC650B LED40S840 PSU W60L60 CN	4,556 lm	4000 K	159.859649122807 lm/W	80	88 degree(s)	Opal
911401561846	RC650B LED40S865 PSU W60L60	4,556 lm	6500 K	159.859649122807 lm/W	80	88 degree(s)	Opal
911401561946	RC650B LED40S840 PSU W60L60	4,556 lm	4000 K	159.859649122807 lm/W	80	88 degree(s)	Opal
911401562246	RC650B LED40S965 PSU W60L60	4,374 lm	6500 K	153.47368421052633 lm/W	90	88 degree(s)	Opal
911401562346	RC650B LED40S840 PSD W60L60	4,556 lm	4000 K	166.8864468864469 lm/W	80	88 degree(s)	Opal

Order Code	Full Product Name	Luminous Flux	Correlated Color Temperature (Nom)	Luminous Efficacy (rated) (Nom)	Color rendering index (CRI)	Beam angle of light source	Optic type
911401562446	RC650B LED40S865 PSD W60L60	4,556 lm	6500 K	166.8864468864469 lm/W	80	88 degree(s)	Opal
911401562646	RC650B LED40S840 PSD W60L60 CN	4,556 lm	4000 K	166.8864468864469 lm/W	80	88 degree(s)	Opal
911401562846	RC650B LED40S940 PSD W60L60 CAU	4,374 lm	4000 K	160.2197802197802 lm/W	90	88 degree(s)	Opal
911401563146	RC650B LED40S965 PSD W60L60	4,374 lm	6500 K	160.2197802197802 lm/W	90	88 degree(s)	Opal
911401563246	RC650X LED48/840 W60L60 WIA CN	4,556 lm	4000 K	159.859649122807 lm/W	80	88 degree(s)	Opal
911401563446	RC650X LED48/840 W60L60 WIA	4,556 lm	4000 K	159.859649122807 lm/W	80	88 degree(s)	Opal
911401563646	RC650X LED40S865 W60L60 SIA S2	4,556 lm	6500 K	159.859649122807 lm/W	80	88 degree(s)	Opal
911401563746	RC650X LED40S840 W60L60 SIA S2	4,556 lm	4000 K	159.859649122807 lm/W	80	88 degree(s)	Opal
911401564046	RC650X LED40S840 W60L60 SIA S2 CAU	4,556 lm	4000 K	159.859649122807 lm/W	80	88 degree(s)	Opal
911401564246	RC650X LED40S940 W60L60 SIA S2	4,374 lm	4000 K	153.47368421052633 lm/W	90	88 degree(s)	Opal
911401564346	RC650X LED40S940 W60L60 SIA S2 CAU	4,374 lm	4000 K	153.47368421052633 lm/W	90	88 degree(s)	Opal
911401564646	RC650X LED40S965 W60L60 SIA S2	4,374 lm	6500 K	153.47368421052633 lm/W	90	88 degree(s)	Opal
911401564846	RC650X LED40/840 W60L60 SIA S15	4,556 lm	4000 K	159.859649122807 lm/W	80	88 degree(s)	Opal
911401565046	RC650X LED40/840 W60L60 SIA S15 CAU	4,556 lm	4000 K	159.859649122807 lm/W	80	88 degree(s)	Opal
911401566046	RC650X LED40/8TWH W60L60 SIA S2	4,328 lm	Tunable White	146.71186440677965 lm/W	80	88 degree(s)	Opal
911401566246	RC650X LED40/9TWH W60L60 SIA S2	4,155 lm	Tunable White	140.84745762711864 lm/W	90	88 degree(s)	Opal
911401566446	RC650X LED40/8TWH W60L60 SIA S2 CAU	4,328 lm	Tunable White	146.71186440677965 lm/W	80	88 degree(s)	Opal
911401566646	RC650X LED40/9TWH W60L60 SIA S2 CAU	4,155 lm	Tunable White	140.84745762711864 lm/W	90	88 degree(s)	Opal
911401566846	RC650B LED40S840 PSU W60L60 TWN	4,888 lm	4000 K	139.65714285714284 lm/W	80	88 degree(s)	Opal
911401567046	RC650B LED40/840 PSU W60L60 UE CAU	4,000 lm	4000 K	173.91304347826087 lm/W	80	88 degree(s)	Opal
911401567246	RC650B LED40/840 PSU W60L60 UE	4,000 lm	4000 K	173.91304347826087 lm/W	80	88 degree(s)	Opal
911401567446	RC650B LED40/BioUPD PSD W60L60	4,244 lm	Tunable White	124.82352941176471 lm/W	80	88 degree(s)	Opal
911401567846	RC650B LED40/BioUPD PSD W60L60 CAU	4,244 lm	Tunable White	124.82352941176471 lm/W	80	88 degree(s)	Opal
911401568246	RC650X LED40/BioUPD W60L60 SIA S2	4,244 lm	Tunable White	124.82352941176471 lm/W	80	88 degree(s)	Opal
911401568446	RC650X LED40/BioUPD W60L60 SIA S2 CAU	4,244 lm	Tunable White	124.82352941176471 lm/W	80	88 degree(s)	Opal
911401568546	RC650X LED40/BioUPD W60L60 SIA S15	4,244 lm	Tunable White	124.82352941176471 lm/W	80	88 degree(s)	Opal

Order Code	Full Product Name	Luminous Flux	Correlated Color Temperature (Nom)	Luminous Efficacy (rated) (Nom)	Color rendering index (CRI)	Beam angle of light source	Optic type
911401568646	RC650X LED40/BioUPD W60L60 SIA S15 CAU	4,244 lm	Tunable White	124.82352941176471 lm/W	80	88 degree(s)	Opal
911401561646	RC650B LED40S840 PSU W30L120 CN	4,556 lm	4000 K	159.859649122807 lm/W	80	88 degree(s)	Opal
911401562046	RC650B LED40S865 PSU W30L120	4,556 lm	6500 K	159.859649122807 lm/W	80	88 degree(s)	Opal
911401562146	RC650B LED40S840 PSU W30L120	4,556 lm	4000 K	159.859649122807 lm/W	80	88 degree(s)	Opal
911401562546	RC650B LED40S840 PSD W30L120	4,556 lm	4000 K	166.8864468864469 lm/W	80	88 degree(s)	Opal
911401562746	RC650B LED40S940 PSD W30L120	4,374 lm	4000 K	160.2197802197802 lm/W	90	88 degree(s)	Opal
911401562946	RC650B LED40S940 PSD W30L120 CAU	4,374 lm	4000 K	160.2197802197802 lm/W	90	88 degree(s)	Opal
911401563346	RC650X LED48/840 W30L120 WIA CN	4,556 lm	4000 K	159.859649122807 lm/W	80	88 degree(s)	Opal
911401563546	RC650X LED48/840 W30L120 WIA	4,556 lm	4000 K	159.859649122807 lm/W	80	88 degree(s)	Opal
911401563846	RC650X LED40S865 W30L120 SIA S2	4,556 lm	6500 K	159.859649122807 lm/W	80	88 degree(s)	Opal
911401563946	RC650X LED40S840 W30L120 SIA S2	4,556 lm	4000 K	159.859649122807 lm/W	80	88 degree(s)	Opal
911401564146	RC650X LED40S940 W30L120 SIA S2	4,374 lm	4000 K	153.47368421052633 lm/W	90	88 degree(s)	Opal
911401564446	RC650X LED40S940 W30L120 SIA S2 CAU	4,374 lm	4000 K	153.47368421052633 lm/W	90	88 degree(s)	Opal
911401564546	RC650X LED40S965 W30L120 SIA S2	4,374 lm	6500 K	153.47368421052633 lm/W	90	88 degree(s)	Opal
911401564746	RC650X LED40S840 W30L120 SIA S2 CAU	4,556 lm	4000 K	159.859649122807 lm/W	80	88 degree(s)	Opal
911401564946	RC650X LED40/840 W30L120 SIA S15	4,556 lm	4000 K	159.859649122807 lm/W	80	88 degree(s)	Opal
911401565146	RC650X LED40/840 W30L120 SIA S15 CAU	4,556 lm	4000 K	159.859649122807 lm/W	80	88 degree(s)	Opal
911401566146	RC650X LED40/8TWH W30L120 SIA S2	4,328 lm	Tunable White	146.71186440677965 lm/W	80	88 degree(s)	Opal
911401566346	RC650X LED40/9TWH W30L120 SIA S2	4,155 lm	Tunable White	140.84745762711864 lm/W	90	88 degree(s)	Opal
911401566546	RC650X LED40/8TWH W30L120 SIA S2 CAU	4,328 lm	Tunable White	146.71186440677965 lm/W	80	88 degree(s)	Opal
911401566746	RC650X LED40/9TWH W30L120 SIA S2 CAU	4,155 lm	Tunable White	140.84745762711864 lm/W	90	88 degree(s)	Opal
911401566946	RC650B LED40/840 PSU W30L120 UE CAU	4,000 lm	4000 K	173.91304347826087 lm/W	80	88 degree(s)	Opal
911401567146	RC650B LED40/840 PSU W30L120 UE	4,000 lm	4000 K	173.91304347826087 lm/W	80	88 degree(s)	Opal
911401567346	RC650B LED40/BioUPD PSD W30L120	4,244 lm	Tunable White	124.82352941176471 lm/W	80	88 degree(s)	Opal

Order Code	Full Product Name	Luminous Flux	Correlated Color Temperature (Nom)	Luminous Efficacy (rated) (Nom)	Color rendering index (CRI)	Beam angle of light source	Optic type
911401567746	RC650B LED40/BioUPD PSD W30L120 CAU	4,244 lm	Tunable White	124.82352941176471 lm/W	80	88 degree(s)	Opal
911401568146	RC650X LED40/BioUPD W30L120 SIA S2	4,244 lm	Tunable White	124.82352941176471 lm/W	80	88 degree(s)	Opal
911401568346	RC650X LED40/BioUPD W30L120 SIA S2 CAU	4,244 lm	Tunable White	124.82352941176471 lm/W	80	88 degree(s)	Opal

Operating and Electrical

Order Code	Full Product Name	Input Voltage	Power Consumption	Suitable for random switching	Protection class IEC
911401548861	RC650B LED40S865 PSU W30L120	220 to 240 V	28.7 W	No	Safety class I
911401549061	RC650B LED40S840 PSU W30L120	220 to 240 V	28.7 W	No	Safety class I
911401549161	RC650B LED40S840 PSD W30L120	220 to 240 V	29.2 W	No	Safety class I
911401556761	RC650B LED40S940 PSD W30L120	220 to 240 V	29.2 W	No	Safety class I
911401557961	RC650B LED40S9 TWH W30L120	220 to 240 V	30 W	No	Safety class II
911401558361	RC650B LED40S940 PSD W30L120 CAU	220 to 240 V	29.2 W	No	Safety class I
911401548461	RC650B LED40S865 PSU W60L60	220 to 240 V	28.7 W	No	Safety class I
911401548661	RC650B LED40S840 PSU W60L60	220 to 240 V	28.7 W	No	Safety class I
911401548761	RC650B LED40S840 PSD W60L60	220 to 240 V	29.2 W	No	Safety class I
911401549761	RC650B LED40S840 PSU W60L60 TWN	100 to 277 V	35 W	No	Safety class I
911401554061	RC650B LED40S8 TWH W60L60	220 to 240 V	30 W	No	Safety class II
911401557861	RC650B LED40S9 TWH W60L60	220 to 240 V	30 W	No	Safety class II
911401558161	RC650B LED40S940 PSD W60L60 CAU	220 to 240 V	29.2 W	No	Safety class I
911401580161	RC650B LED40S965 PSD W60L60	220 to 240 V	29.2 W	No	Safety class I
911401561546	RC650B LED40S840 PSU W60L60 CN	220 to 240 V	28.5 W	Not applicable	Safety class I
911401561846	RC650B LED40S865 PSU W60L60	220 to 240 V	28.5 W	Not applicable	Safety class I
911401561946	RC650B LED40S840 PSU W60L60	220 to 240 V	28.5 W	Not applicable	Safety class I
911401562246	RC650B LED40S965 PSU W60L60	220 to 240 V	28.5 W	Not applicable	Safety class I
911401562346	RC650B LED40S840 PSD W60L60	220 to 240 V	27.3 W	Not applicable	Safety class I
911401562446	RC650B LED40S865 PSD W60L60	220 to 240 V	27.3 W	Not applicable	Safety class I
911401562646	RC650B LED40S840 PSD W60L60 CN	220 to 240 V	27.3 W	Not applicable	Safety class I
911401562846	RC650B LED40S940 PSD W60L60 CAU	220 to 240 V	27.3 W	Not applicable	Safety class I
911401563146	RC650B LED40S965 PSD W60L60	220 to 240 V	27.3 W	Not applicable	Safety class I
911401563246	RC650X LED48/840 W60L60 WIA CN	220 to 240 V	28.5 W	Not applicable	Safety class I
911401563446	RC650X LED48/840 W60L60 WIA	220 to 240 V	28.5 W	Not applicable	Safety class I
911401563646	RC650X LED40S865 W60L60 SIA S2	220 to 240 V	28.5 W	Not applicable	Safety class I
911401563746	RC650X LED40S840 W60L60 SIA S2	220 to 240 V	28.5 W	Not applicable	Safety class I
911401564046	RC650X LED40S840 W60L60 SIA S2 CAU	220 to 240 V	28.5 W	Not applicable	Safety class I
911401564246	RC650X LED40S940 W60L60 SIA S2	220 to 240 V	28.5 W	Not applicable	Safety class I
911401564346	RC650X LED40S940 W60L60 SIA S2 CAU	220 to 240 V	28.5 W	Not applicable	Safety class I
911401564646	RC650X LED40S965 W60L60 SIA S2	220 to 240 V	28.5 W	Not applicable	Safety class I

Order Code	Full Product Name	Input Voltage	Power Consumption	Suitable for random switching	Protection class IEC
911401564846	RC650X LED40/840 W60L60 SIA S15	220 to 240 V	28.5 W	Not applicable	Safety class I
911401565046	RC650X LED40/840 W60L60 SIA S15 CAU	220 to 240 V	28.5 W	Not applicable	Safety class I
911401566046	RC650X LED40/8TWH W60L60 SIA S2	220 to 240 V	29.5 W	Not applicable	Safety class I
911401566246	RC650X LED40/9TWH W60L60 SIA S2	220 to 240 V	29.5 W	Not applicable	Safety class I
911401566446	RC650X LED40/8TWH W60L60 SIA S2 CAU	220 to 240 V	29.5 W	Not applicable	Safety class I
911401566646	RC650X LED40/9TWH W60L60 SIA S2 CAU	220 to 240 V	29.5 W	Not applicable	Safety class I
911401566846	RC650B LED40S840 PSU W60L60 TWN	220 to 240 V	35 W	Not applicable	Safety class I
911401567046	RC650B LED40/840 PSU W60L60 UE CAU	220 to 240 V	23 W	Not applicable	Safety class I
911401567246	RC650B LED40/840 PSU W60L60 UE	220 to 240 V	23 W	Not applicable	Safety class I
911401567446	RC650B LED40/BioUPD PSD W60L60	220 to 240 V	34 W	Not applicable	Safety class I
911401567846	RC650B LED40/BioUPD PSD W60L60 CAU	220 to 240 V	34 W	Not applicable	Safety class I
911401568246	RC650X LED40/BioUPD W60L60 SIA S2	220 to 240 V	34 W	Not applicable	Safety class I
911401568446	RC650X LED40/BioUPD W60L60 SIA S2 CAU	220 to 240 V	34 W	Not applicable	Safety class I
911401568546	RC650X LED40/BioUPD W60L60 SIA S15	220 to 240 V	34 W	Not applicable	Safety class I
911401568646	RC650X LED40/BioUPD W60L60 SIA S15 CAU	220 to 240 V	34 W	Not applicable	Safety class I
911401561646	RC650B LED40S840 PSU W30L120 CN	220 to 240 V	28.5 W	Not applicable	Safety class I
911401562046	RC650B LED40S865 PSU W30L120	220 to 240 V	28.5 W	Not applicable	Safety class I
911401562146	RC650B LED40S840 PSU W30L120	220 to 240 V	28.5 W	Not applicable	Safety class I
911401562546	RC650B LED40S840 PSD W30L120	220 to 240 V	27.3 W	Not applicable	Safety class I
911401562746	RC650B LED40S940 PSD W30L120	220 to 240 V	27.3 W	Not applicable	Safety class I
911401562946	RC650B LED40S940 PSD W30L120 CAU	220 to 240 V	27.3 W	Not applicable	Safety class I
911401563346	RC650X LED48/840 W30L120 WIA CN	220 to 240 V	28.5 W	Not applicable	Safety class I
911401563546	RC650X LED48/840 W30L120 WIA	220 to 240 V	28.5 W	Not applicable	Safety class I
911401563846	RC650X LED40S865 W30L120 SIA S2	220 to 240 V	28.5 W	Not applicable	Safety class I
911401563946	RC650X LED40S840 W30L120 SIA S2	220 to 240 V	28.5 W	Not applicable	Safety class I
911401564146	RC650X LED40S940 W30L120 SIA S2	220 to 240 V	28.5 W	Not applicable	Safety class I
911401564446	RC650X LED40S940 W30L120 SIA S2 CAU	220 to 240 V	28.5 W	Not applicable	Safety class I
911401564546	RC650X LED40S965 W30L120 SIA S2	220 to 240 V	28.5 W	Not applicable	Safety class I
911401564746	RC650X LED40S840 W30L120 SIA S2 CAU	220 to 240 V	28.5 W	Not applicable	Safety class I
911401564946	RC650X LED40/840 W30L120 SIA S15	220 to 240 V	28.5 W	Not applicable	Safety class I
911401565146	RC650X LED40/840 W30L120 SIA S15 CAU	220 to 240 V	28.5 W	Not applicable	Safety class I
911401566146	RC650X LED40/8TWH W30L120 SIA S2	220 to 240 V	29.5 W	Not applicable	Safety class I
911401566346	RC650X LED40/9TWH W30L120 SIA S2	220 to 240 V	29.5 W	Not applicable	Safety class I
911401566546	RC650X LED40/8TWH W30L120 SIA S2 CAU	220 to 240 V	29.5 W	Not applicable	Safety class I
911401566746	RC650X LED40/9TWH W30L120 SIA S2 CAU	220 to 240 V	29.5 W	Not applicable	Safety class I
911401566946	RC650B LED40/840 PSU W30L120 UE CAU	220 to 240 V	23 W	Not applicable	Safety class I
911401567146	RC650B LED40/840 PSU W30L120 UE	220 to 240 V	23 W	Not applicable	Safety class I
911401567346	RC650B LED40/BioUPD PSD W30L120	220 to 240 V	34 W	Not applicable	Safety class I
911401567746	RC650B LED40/BioUPD PSD W30L120 CAU	220 to 240 V	34 W	Not applicable	Safety class I
911401568146	RC650X LED40/BioUPD W30L120 SIA S2	220 to 240 V	34 W	Not applicable	Safety class I
911401568346	RC650X LED40/BioUPD W30L120 SIA S2 CAU	220 to 240 V	34 W	Not applicable	Safety class I

Controls and Dimming

Order Code	Full Product Name	Dimmable	Maximum dim level
911401548861	RC650B LED40S865 PSU W30L120	No	Not applicable
911401549061	RC650B LED40S840 PSU W30L120	No	Not applicable
911401549161	RC650B LED40S840 PSD W30L120	Yes	Programmable
911401556761	RC650B LED40S940 PSD W30L120	Yes	Programmable
911401557961	RC650B LED40S9 TWH W30L120	Yes	1%
911401558361	RC650B LED40S940 PSD W30L120 CAU	Yes	Programmable
911401548461	RC650B LED40S865 PSU W60L60	No	Not applicable
911401548661	RC650B LED40S840 PSU W60L60	No	Not applicable
911401548761	RC650B LED40S840 PSD W60L60	Yes	Programmable
911401549761	RC650B LED40S840 PSU W60L60 TWN	No	Not applicable
911401554061	RC650B LED40S8 TWH W60L60	Yes	1%
911401557861	RC650B LED40S9 TWH W60L60	Yes	1%
911401558161	RC650B LED40S940 PSD W60L60 CAU	Yes	Programmable
911401580161	RC650B LED40S965 PSD W60L60	Yes	Programmable
911401561546	RC650B LED40S840 PSU W60L60 CN	-	Not applicable
911401561846	RC650B LED40S865 PSU W60L60	-	Not applicable
911401561946	RC650B LED40S840 PSU W60L60	-	Not applicable
911401562246	RC650B LED40S965 PSU W60L60	-	Not applicable
911401562346	RC650B LED40S840 PSD W60L60	DALI	1%
911401562446	RC650B LED40S865 PSD W60L60	DALI	1%
911401562646	RC650B LED40S840 PSD W60L60 CN	DALI	1%
911401562846	RC650B LED40S940 PSD W60L60 CAU	DALI	1%
911401563146	RC650B LED40S965 PSD W60L60	DALI	1%
911401563246	RC650X LED48/840 W60L60 WIA CN	Wireless Dim	1%
911401563446	RC650X LED48/840 W60L60 WIA	Wireless Dim	1%
911401563646	RC650X LED40S865 W60L60 SIA S2	Wireless Dim	1%
911401563746	RC650X LED40S840 W60L60 SIA S2	Wireless Dim	1%
911401564046	RC650X LED40S840 W60L60 SIA S2 CAU	Wireless Dim	1%
911401564246	RC650X LED40S940 W60L60 SIA S2	Wireless Dim	1%
911401564346	RC650X LED40S940 W60L60 SIA S2 CAU	Wireless Dim	1%
911401564646	RC650X LED40S965 W60L60 SIA S2	Wireless Dim	1%
911401564846	RC650X LED40/840 W60L60 SIA S15	Wireless Dim	1%
911401565046	RC650X LED40/840 W60L60 SIA S15 CAU	Wireless Dim	1%
911401566046	RC650X LED40/8TWH W60L60 SIA S2	Wireless Dim	1%
911401566246	RC650X LED40/9TWH W60L60 SIA S2	Wireless Dim	1%
911401566446	RC650X LED40/8TWH W60L60 SIA S2 CAU	Wireless Dim	1%
911401566646	RC650X LED40/9TWH W60L60 SIA S2 CAU	Wireless Dim	1%
911401566846	RC650B LED40S840 PSU W60L60 TWN	-	Not applicable
911401567046	RC650B LED40/840 PSU W60L60 UE CAU	-	Not applicable
911401567246	RC650B LED40/840 PSU W60L60 UE	-	Not applicable
911401567446	RC650B LED40/BioUPD PSD W60L60	DALI	1%

Order Code	Full Product Name	Dimmable	Maximum dim level
911401567846	RC650B LED40/BioUPD PSD W60L60 CAU	DALI	1%
911401568246	RC650X LED40/BioUPD W60L60 SIA S2	Wireless Dim	1%
911401568446	RC650X LED40/BioUPD W60L60 SIA S2 CAU	Wireless Dim	1%
911401568546	RC650X LED40/BioUPD W60L60 SIA S15	Wireless Dim	1%
911401568646	RC650X LED40/BioUPD W60L60 SIA S15 CAU	Wireless Dim	1%
911401561646	RC650B LED40S840 PSU W30L120 CN	-	Not applicable
911401562046	RC650B LED40S865 PSU W30L120	-	Not applicable
911401562146	RC650B LED40S840 PSU W30L120	-	Not applicable
911401562546	RC650B LED40S840 PSD W30L120	DALI	1%
911401562746	RC650B LED40S940 PSD W30L120	DALI	1%
911401562946	RC650B LED40S940 PSD W30L120 CAU	DALI	1%
911401563346	RC650X LED48/840 W30L120 WIA CN	Wireless Dim	1%
911401563546	RC650X LED48/840 W30L120 WIA	Wireless Dim	1%
911401563846	RC650X LED40S865 W30L120 SIA S2	Wireless Dim	1%
911401563946	RC650X LED40S840 W30L120 SIA S2	Wireless Dim	1%
911401564146	RC650X LED40S940 W30L120 SIA S2	Wireless Dim	1%
911401564446	RC650X LED40S940 W30L120 SIA S2 CAU	Wireless Dim	1%
911401564546	RC650X LED40S965 W30L120 SIA S2	Wireless Dim	1%
911401564746	RC650X LED40S840 W30L120 SIA S2 CAU	Wireless Dim	1%
911401564946	RC650X LED40/840 W30L120 SIA S15	Wireless Dim	1%
911401565146	RC650X LED40/840 W30L120 SIA S15 CAU	Wireless Dim	1%
911401566146	RC650X LED40/8TWH W30L120 SIA S2	Wireless Dim	1%
911401566346	RC650X LED40/9TWH W30L120 SIA S2	Wireless Dim	1%
911401566546	RC650X LED40/8TWH W30L120 SIA S2 CAU	Wireless Dim	1%
911401566746	RC650X LED40/9TWH W30L120 SIA S2 CAU	Wireless Dim	1%
911401566946	RC650B LED40/840 PSU W30L120 UE CAU	-	Not applicable
911401567146	RC650B LED40/840 PSU W30L120 UE	-	Not applicable
911401567346	RC650B LED40/BioUPD PSD W30L120	DALI	1%
911401567746	RC650B LED40/BioUPD PSD W30L120 CAU	DALI	1%
911401568146	RC650X LED40/BioUPD W30L120 SIA S2	Wireless Dim	1%
911401568346	RC650X LED40/BioUPD W30L120 SIA S2 CAU	Wireless Dim	1%

Mechanical and Housing

Order Code	Full Product Name	Optical cover type
911401548861	RC650B LED40S865 PSU W30L120	Polycarbonate
911401549061	RC650B LED40S840 PSU W30L120	Polycarbonate
911401549161	RC650B LED40S840 PSD W30L120	Polycarbonate
911401556761	RC650B LED40S940 PSD W30L120	Polycarbonate
911401557961	RC650B LED40S9 TWH W30L120	Polycarbonate
911401558361	RC650B LED40S940 PSD W30L120 CAU	Polycarbonate
911401548461	RC650B LED40S865 PSU W60L60	Polycarbonate

Order Code	Full Product Name	Optical cover type
911401548661	RC650B LED40S840 PSU W60L60	Polycarbonate
911401548761	RC650B LED40S840 PSD W60L60	Polycarbonate
911401549761	RC650B LED40S840 PSU W60L60 TWN	Polycarbonate
911401554061	RC650B LED40S8 TWH W60L60	Polycarbonate
911401557861	RC650B LED40S9 TWH W60L60	Polycarbonate
911401558161	RC650B LED40S940 PSD W60L60 CAU	Polycarbonate
911401580161	RC650B LED40S965 PSD W60L60	Polycarbonate
911401561546	RC650B LED40S840 PSU W60L60 CN	Opal
911401561846	RC650B LED40S865 PSU W60L60	Opal
911401561946	RC650B LED40S840 PSU W60L60	Opal
911401562246	RC650B LED40S965 PSU W60L60	Opal
911401562346	RC650B LED40S840 PSD W60L60	Opal
911401562446	RC650B LED40S865 PSD W60L60	Opal
911401562646	RC650B LED40S840 PSD W60L60 CN	Opal
911401562846	RC650B LED40S940 PSD W60L60 CAU	Opal
911401563146	RC650B LED40S965 PSD W60L60	Opal
911401563246	RC650X LED48/840 W60L60 WIA CN	Opal
911401563446	RC650X LED48/840 W60L60 WIA	Opal
911401563646	RC650X LED40S865 W60L60 SIA S2	Opal
911401563746	RC650X LED40S840 W60L60 SIA S2	Opal
911401564046	RC650X LED40S840 W60L60 SIA S2 CAU	Opal
911401564246	RC650X LED40S940 W60L60 SIA S2	Opal
911401564346	RC650X LED40S940 W60L60 SIA S2 CAU	Opal
911401564646	RC650X LED40S965 W60L60 SIA S2	Opal
911401564846	RC650X LED40/840 W60L60 SIA S15	Opal
911401565046	RC650X LED40/840 W60L60 SIA S15 CAU	Opal
911401566046	RC650X LED40/8TWH W60L60 SIA S2	Opal
911401566246	RC650X LED40/9TWH W60L60 SIA S2	Opal
911401566446	RC650X LED40/8TWH W60L60 SIA S2 CAU	Opal
911401566646	RC650X LED40/9TWH W60L60 SIA S2 CAU	Opal
911401566846	RC650B LED40S840 PSU W60L60 TWN	Opal
911401567046	RC650B LED40/840 PSU W60L60 UE CAU	Opal
911401567246	RC650B LED40/840 PSU W60L60 UE	Opal
911401567446	RC650B LED40/BioUPD PSD W60L60	Opal
911401567846	RC650B LED40/BioUPD PSD W60L60 CAU	Opal
911401568246	RC650X LED40/BioUPD W60L60 SIA S2	Opal
911401568446	RC650X LED40/BioUPD W60L60 SIA S2 CAU	Opal
911401568546	RC650X LED40/BioUPD W60L60 SIA S15	Opal
911401568646	RC650X LED40/BioUPD W60L60 SIA S15 CAU	Opal
911401561646	RC650B LED40S840 PSU W30L120 CN	Opal
911401562046	RC650B LED40S865 PSU W30L120	Opal
911401562146	RC650B LED40S840 PSU W30L120	Opal

Order Code	Full Product Name	Optical cover type
911401562546	RC650B LED40S840 PSD W30L120	Opal
911401562746	RC650B LED40S940 PSD W30L120	Opal
911401562946	RC650B LED40S940 PSD W30L120 CAU	Opal
911401563346	RC650X LED48/840 W30L120 WIA CN	Opal
911401563546	RC650X LED48/840 W30L120 WIA	Opal
911401563846	RC650X LED40S865 W30L120 SIA S2	Opal
911401563946	RC650X LED40S840 W30L120 SIA S2	Opal
911401564146	RC650X LED40S940 W30L120 SIA S2	Opal
911401564446	RC650X LED40S940 W30L120 SIA S2 CAU	Opal
911401564546	RC650X LED40S965 W30L120 SIA S2	Opal
911401564746	RC650X LED40S840 W30L120 SIA S2 CAU	Opal
911401564946	RC650X LED40/840 W30L120 SIA S15	Opal
911401565146	RC650X LED40/840 W30L120 SIA S15 CAU	Opal
911401566146	RC650X LED40/8TWH W30L120 SIA S2	Opal
911401566346	RC650X LED40/9TWH W30L120 SIA S2	Opal
911401566546	RC650X LED40/8TWH W30L120 SIA S2 CAU	Opal
911401566746	RC650X LED40/9TWH W30L120 SIA S2 CAU	Opal
911401566946	RC650B LED40/840 PSU W30L120 UE CAU	Opal
911401567146	RC650B LED40/840 PSU W30L120 UE	Opal
911401567346	RC650B LED40/BioUPD PSD W30L120	Opal
911401567746	RC650B LED40/BioUPD PSD W30L120 CAU	Opal
911401568146	RC650X LED40/BioUPD W30L120 SIA S2	Opal
911401568346	RC650X LED40/BioUPD W30L120 SIA S2 CAU	Opal

Approval and Application

Order Code	Full Product Name	Flammability mark
911401548861	RC650B LED40S865 PSU W30L120	For mounting on normally flammable surfaces
911401549061	RC650B LED40S840 PSU W30L120	For mounting on normally flammable surfaces
911401549161	RC650B LED40S840 PSD W30L120	For mounting on normally flammable surfaces
911401556761	RC650B LED40S940 PSD W30L120	For mounting on normally flammable surfaces
911401557961	RC650B LED40S9 TWH W30L120	For mounting on normally flammable surfaces
911401558361	RC650B LED40S940 PSD W30L120 CAU	For mounting on normally flammable surfaces
911401548461	RC650B LED40S865 PSU W60L60	For mounting on normally flammable surfaces
911401548661	RC650B LED40S840 PSU W60L60	For mounting on normally flammable surfaces
911401548761	RC650B LED40S840 PSD W60L60	For mounting on normally flammable surfaces
911401549761	RC650B LED40S840 PSU W60L60 TWN	For mounting on normally flammable surfaces
911401554061	RC650B LED40S8 TWH W60L60	For mounting on normally flammable surfaces
911401557861	RC650B LED40S9 TWH W60L60	For mounting on normally flammable surfaces
911401558161	RC650B LED40S940 PSD W60L60 CAU	For mounting on normally flammable surfaces
911401580161	RC650B LED40S965 PSD W60L60	For mounting on normally flammable surfaces
911401561546	RC650B LED40S840 PSU W60L60 CN	-

Order Code	Full Product Name	Flammability mark
911401561846	RC650B LED40S865 PSU W60L60	-
911401561946	RC650B LED40S840 PSU W60L60	-
911401562246	RC650B LED40S965 PSU W60L60	-
911401562346	RC650B LED40S840 PSD W60L60	-
911401562446	RC650B LED40S865 PSD W60L60	-
911401562646	RC650B LED40S840 PSD W60L60 CN	-
911401562846	RC650B LED40S940 PSD W60L60 CAU	-
911401563146	RC650B LED40S965 PSD W60L60	-
911401563246	RC650X LED48/840 W60L60 WIA CN	-
911401563446	RC650X LED48/840 W60L60 WIA	-
911401563646	RC650X LED40S865 W60L60 SIA S2	-
911401563746	RC650X LED40S840 W60L60 SIA S2	-
911401564046	RC650X LED40S840 W60L60 SIA S2 CAU	-
911401564246	RC650X LED40S940 W60L60 SIA S2	-
911401564346	RC650X LED40S940 W60L60 SIA S2 CAU	-
911401564646	RC650X LED40S965 W60L60 SIA S2	-
911401564846	RC650X LED40/840 W60L60 SIA S15	-
911401565046	RC650X LED40/840 W60L60 SIA S15 CAU	-
911401566046	RC650X LED40/8TWH W60L60 SIA S2	-
911401566246	RC650X LED40/9TWH W60L60 SIA S2	-
911401566446	RC650X LED40/8TWH W60L60 SIA S2 CAU	-
911401566646	RC650X LED40/9TWH W60L60 SIA S2 CAU	-
911401566846	RC650B LED40S840 PSU W60L60 TWN	-
911401567046	RC650B LED40/840 PSU W60L60 UE CAU	-
911401567246	RC650B LED40/840 PSU W60L60 UE	-
911401567446	RC650B LED40/BioUPD PSD W60L60	-
911401567846	RC650B LED40/BioUPD PSD W60L60 CAU	-
911401568246	RC650X LED40/BioUPD W60L60 SIA S2	-
911401568446	RC650X LED40/BioUPD W60L60 SIA S2 CAU	-
911401568546	RC650X LED40/BioUPD W60L60 SIA S15	-
911401568646	RC650X LED40/BioUPD W60L60 SIA S15 CAU	-
911401561646	RC650B LED40S840 PSU W30L120 CN	-
911401562046	RC650B LED40S865 PSU W30L120	-
911401562146	RC650B LED40S840 PSU W30L120	-
911401562546	RC650B LED40S840 PSD W30L120	-
911401562746	RC650B LED40S940 PSD W30L120	-
911401562946	RC650B LED40S940 PSD W30L120 CAU	-
911401563346	RC650X LED48/840 W30L120 WIA CN	-
911401563546	RC650X LED48/840 W30L120 WIA	-
911401563846	RC650X LED40S865 W30L120 SIA S2	-
911401563946	RC650X LED40S840 W30L120 SIA S2	-
911401564146	RC650X LED40S940 W30L120 SIA S2	-

Order Code	Full Product Name	Flammability mark
911401564446	RC650X LED40S940 W30L120 SIA S2 CAU	-
911401564546	RC650X LED40S965 W30L120 SIA S2	-
911401564746	RC650X LED40S840 W30L120 SIA S2 CAU	-
911401564946	RC650X LED40/840 W30L120 SIA S15	-
911401565146	RC650X LED40/840 W30L120 SIA S15 CAU	-
911401566146	RC650X LED40/8TWH W30L120 SIA S2	-
911401566346	RC650X LED40/9TWH W30L120 SIA S2	-
911401566546	RC650X LED40/8TWH W30L120 SIA S2 CAU	-
911401566746	RC650X LED40/9TWH W30L120 SIA S2 CAU	-
911401566946	RC650B LED40/840 PSU W30L120 UE CAU	-
911401567146	RC650B LED40/840 PSU W30L120 UE	-
911401567346	RC650B LED40/BioUPD PSD W30L120	-
911401567746	RC650B LED40/BioUPD PSD W30L120 CAU	-
911401568146	RC650X LED40/BioUPD W30L120 SIA S2	-
911401568346	RC650X LED40/BioUPD W30L120 SIA S2 CAU	-

Initial Performance (IEC Compliant)

Order Code	Full Product Name	Luminous flux tolerance
911401548861	RC650B LED40S865 PSU W30L120	+/-10%
911401549061	RC650B LED40S840 PSU W30L120	+/-10%
911401549161	RC650B LED40S840 PSD W30L120	+/-10%
911401556761	RC650B LED40S940 PSD W30L120	+/-10%
911401557961	RC650B LED40S9 TWH W30L120	+/-10%
911401558361	RC650B LED40S940 PSD W30L120 CAU	+/-10%
911401548461	RC650B LED40S865 PSU W60L60	+/-10%
911401548661	RC650B LED40S840 PSU W60L60	+/-10%
911401548761	RC650B LED40S840 PSD W60L60	+/-10%
911401549761	RC650B LED40S840 PSU W60L60 TWN	+/-10%
911401554061	RC650B LED40S8 TWH W60L60	+/-10%
911401557861	RC650B LED40S9 TWH W60L60	+/-10%
911401558161	RC650B LED40S940 PSD W60L60 CAU	+/-10%
911401580161	RC650B LED40S965 PSD W60L60	+/-10%
911401561546	RC650B LED40S840 PSU W60L60 CN	-10% / +10%
911401561846	RC650B LED40S865 PSU W60L60	-10% / +10%
911401561946	RC650B LED40S840 PSU W60L60	-10% / +10%
911401562246	RC650B LED40S965 PSU W60L60	-10% / +10%
911401562346	RC650B LED40S840 PSD W60L60	-10% / +10%
911401562446	RC650B LED40S865 PSD W60L60	-10% / +10%
911401562646	RC650B LED40S840 PSD W60L60 CN	-10% / +10%
911401562846	RC650B LED40S940 PSD W60L60 CAU	-10% / +10%
911401563146	RC650B LED40S965 PSD W60L60	-10% / +10%

Order Code	Full Product Name	Luminous flux tolerance
911401563246	RC650X LED48/840 W60L60 WIA CN	-10% / +10%
911401563446	RC650X LED48/840 W60L60 WIA	-10% / +10%
911401563646	RC650X LED40S865 W60L60 SIA S2	-10% / +10%
911401563746	RC650X LED40S840 W60L60 SIA S2	-10% / +10%
911401564046	RC650X LED40S840 W60L60 SIA S2 CAU	-10% / +10%
911401564246	RC650X LED40S940 W60L60 SIA S2	-10% / +10%
911401564346	RC650X LED40S940 W60L60 SIA S2 CAU	-10% / +10%
911401564646	RC650X LED40S965 W60L60 SIA S2	-10% / +10%
911401564846	RC650X LED40/840 W60L60 SIA S15	-10% / +10%
911401565046	RC650X LED40/840 W60L60 SIA S15 CAU	-10% / +10%
911401566046	RC650X LED40/8TWH W60L60 SIA S2	-10% / +10%
911401566246	RC650X LED40/9TWH W60L60 SIA S2	-10% / +10%
911401566446	RC650X LED40/8TWH W60L60 SIA S2 CAU	-10% / +10%
911401566646	RC650X LED40/9TWH W60L60 SIA S2 CAU	-10% / +10%
911401566846	RC650B LED40S840 PSU W60L60 TWN	-10% / +10%
911401567046	RC650B LED40/840 PSU W60L60 UE CAU	-10% / +10%
911401567246	RC650B LED40/840 PSU W60L60 UE	-10% / +10%
911401567446	RC650B LED40/BioUPD PSD W60L60	-10% / +10%
911401567846	RC650B LED40/BioUPD PSD W60L60 CAU	-10% / +10%
911401568246	RC650X LED40/BioUPD W60L60 SIA S2	-10% / +10%
911401568446	RC650X LED40/BioUPD W60L60 SIA S2 CAU	-10% / +10%
911401568546	RC650X LED40/BioUPD W60L60 SIA S15	-10% / +10%
911401568646	RC650X LED40/BioUPD W60L60 SIA S15 CAU	-10% / +10%
911401561646	RC650B LED40S840 PSU W30L120 CN	-10% / +10%
911401562046	RC650B LED40S865 PSU W30L120	-10% / +10%
911401562146	RC650B LED40S840 PSU W30L120	-10% / +10%
911401562546	RC650B LED40S840 PSD W30L120	-10% / +10%
911401562746	RC650B LED40S940 PSD W30L120	-10% / +10%
911401562946	RC650B LED40S940 PSD W30L120 CAU	-10% / +10%
911401563346	RC650X LED48/840 W30L120 WIA CN	-10% / +10%
911401563546	RC650X LED48/840 W30L120 WIA	-10% / +10%
911401563846	RC650X LED40S865 W30L120 SIA S2	-10% / +10%
911401563946	RC650X LED40S840 W30L120 SIA S2	-10% / +10%
911401564146	RC650X LED40S940 W30L120 SIA S2	-10% / +10%
911401564446	RC650X LED40S940 W30L120 SIA S2 CAU	-10% / +10%
911401564546	RC650X LED40S965 W30L120 SIA S2	-10% / +10%
911401564746	RC650X LED40S840 W30L120 SIA S2 CAU	-10% / +10%
911401564946	RC650X LED40/840 W30L120 SIA S15	-10% / +10%
911401565146	RC650X LED40/840 W30L120 SIA S15 CAU	-10% / +10%
911401566146	RC650X LED40/8TWH W30L120 SIA S2	-10% / +10%
911401566346	RC650X LED40/9TWH W30L120 SIA S2	-10% / +10%
911401566546	RC650X LED40/8TWH W30L120 SIA S2 CAU	-10% / +10%

Order Code	Full Product Name	Luminous flux tolerance
911401566746	RC650X LED40/9TWH W30L120 SIA S2 CAU	-10% / +10%
911401566946	RC650B LED40/840 PSU W30L120 UE CAU	-10% / +10%
911401567146	RC650B LED40/840 PSU W30L120 UE	-10% / +10%
911401567346	RC650B LED40/BioUPD PSD W30L120	-10% / +10%
911401567746	RC650B LED40/BioUPD PSD W30L120 CAU	-10% / +10%
911401568146	RC650X LED40/BioUPD W30L120 SIA S2	-10% / +10%
911401568346	RC650X LED40/BioUPD W30L120 SIA S2 CAU	-10% / +10%

Over Time Performance (IEC Compliant)

Order Code	Full Product Name	Median useful life L90B50
911401548861	RC650B LED40S865 PSU W30L120	37,045 hour(s)
911401549061	RC650B LED40S840 PSU W30L120	37,045 hour(s)
911401549161	RC650B LED40S840 PSD W30L120	33,817 hour(s)
911401556761	RC650B LED40S940 PSD W30L120	33,817 hour(s)
911401557961	RC650B LED40S9 TWH W30L120	33,817 hour(s)
911401558361	RC650B LED40S940 PSD W30L120 CAU	33,817 hour(s)
911401548461	RC650B LED40S865 PSU W60L60	37,045 hour(s)
911401548661	RC650B LED40S840 PSU W60L60	37,045 hour(s)
911401548761	RC650B LED40S840 PSD W60L60	33,817 hour(s)
911401549761	RC650B LED40S840 PSU W60L60 TWN	37,045 hour(s)
911401554061	RC650B LED40S8 TWH W60L60	33,817 hour(s)
911401557861	RC650B LED40S9 TWH W60L60	33,817 hour(s)
911401558161	RC650B LED40S940 PSD W60L60 CAU	33,817 hour(s)
911401580161	RC650B LED40S965 PSD W60L60	33,817 hour(s)
911401561546	RC650B LED40S840 PSU W60L60 CN	-
911401561846	RC650B LED40S865 PSU W60L60	-
911401561946	RC650B LED40S840 PSU W60L60	-
911401562246	RC650B LED40S965 PSU W60L60	-
911401562346	RC650B LED40S840 PSD W60L60	-
911401562446	RC650B LED40S865 PSD W60L60	-
911401562646	RC650B LED40S840 PSD W60L60 CN	-
911401562846	RC650B LED40S940 PSD W60L60 CAU	-
911401563146	RC650B LED40S965 PSD W60L60	-
911401563246	RC650X LED48/840 W60L60 WIA CN	-
911401563446	RC650X LED48/840 W60L60 WIA	-
911401563646	RC650X LED40S865 W60L60 SIA S2	-
911401563746	RC650X LED40S840 W60L60 SIA S2	-
911401564046	RC650X LED40S840 W60L60 SIA S2 CAU	-
911401564246	RC650X LED40S940 W60L60 SIA S2	-
911401564346	RC650X LED40S940 W60L60 SIA S2 CAU	-
911401564646	RC650X LED40S965 W60L60 SIA S2	-

Order Code	Full Product Name	Median useful life L90B50
911401564846	RC650X LED40/840 W60L60 SIA S15	-
911401565046	RC650X LED40/840 W60L60 SIA S15 CAU	-
911401566046	RC650X LED40/8TWH W60L60 SIA S2	-
911401566246	RC650X LED40/9TWH W60L60 SIA S2	-
911401566446	RC650X LED40/8TWH W60L60 SIA S2 CAU	-
911401566646	RC650X LED40/9TWH W60L60 SIA S2 CAU	-
911401566846	RC650B LED40S840 PSU W60L60 TWN	-
911401567046	RC650B LED40/840 PSU W60L60 UE CAU	-
911401567246	RC650B LED40/840 PSU W60L60 UE	-
911401567446	RC650B LED40/BioUPD PSD W60L60	-
911401567846	RC650B LED40/BioUPD PSD W60L60 CAU	-
911401568246	RC650X LED40/BioUPD W60L60 SIA S2	-
911401568446	RC650X LED40/BioUPD W60L60 SIA S2 CAU	-
911401568546	RC650X LED40/BioUPD W60L60 SIA S15	-
911401568646	RC650X LED40/BioUPD W60L60 SIA S15 CAU	-
911401561646	RC650B LED40S840 PSU W30L120 CN	-
911401562046	RC650B LED40S865 PSU W30L120	-
911401562146	RC650B LED40S840 PSU W30L120	-
911401562546	RC650B LED40S840 PSD W30L120	-
911401562746	RC650B LED40S940 PSD W30L120	-
911401562946	RC650B LED40S940 PSD W30L120 CAU	-
911401563346	RC650X LED48/840 W30L120 WIA CN	-
911401563546	RC650X LED48/840 W30L120 WIA	-
911401563846	RC650X LED40S865 W30L120 SIA S2	-
911401563946	RC650X LED40S840 W30L120 SIA S2	-
911401564146	RC650X LED40S940 W30L120 SIA S2	-
911401564446	RC650X LED40S940 W30L120 SIA S2 CAU	-
911401564546	RC650X LED40S965 W30L120 SIA S2	-
911401564746	RC650X LED40S840 W30L120 SIA S2 CAU	-
911401564946	RC650X LED40/840 W30L120 SIA S15	-
911401565146	RC650X LED40/840 W30L120 SIA S15 CAU	-
911401566146	RC650X LED40/8TWH W30L120 SIA S2	-
911401566346	RC650X LED40/9TWH W30L120 SIA S2	-
911401566546	RC650X LED40/8TWH W30L120 SIA S2 CAU	-
911401566746	RC650X LED40/9TWH W30L120 SIA S2 CAU	-
911401566946	RC650B LED40/840 PSU W30L120 UE CAU	-
911401567146	RC650B LED40/840 PSU W30L120 UE	-
911401567346	RC650B LED40/BioUPD PSD W30L120	-
911401567746	RC650B LED40/BioUPD PSD W30L120 CAU	-
911401568146	RC650X LED40/BioUPD W30L120 SIA S2	-
911401568346	RC650X LED40/BioUPD W30L120 SIA S2 CAU	-

© 2026 Signify Holding. All rights reserved. The information provided herein is subject to change, without notice. Signify does not give any representation or warranty as to the accuracy or completeness of the information included herein and shall not be liable for any action in reliance thereon. The information presented in this document is not intended as any commercial offer and does not form part of any quotation or contract, unless otherwise agreed by Signify. Philips and the Philips Shield Emblem are registered trademarks of Koninklijke Philips N.V.