PHILIPS

SM294C LED40/830 PSU WP WH GM

911401848399



GreenSpace Surface-mounted, 36 W, 3800 lm, 3000 K, High-gloss mirror, IP65 | Dust penetration-protected, jet-proof

Philips GreenSpace Surface-mounted LED Downlight delivers a superior LED alternative that’s up to 66% more energy efficient than the conventional downlight retrofits. Blending seamlessly into its environment, GreenSpace Surface-mounted LED Downlight mimics the form of conventional recessed downlights minus the associated high energy and maintenance costs. Phiilips GreenSpace Surface-mounted LED Downlight is also ideal for all commercial lighting applications as well as public indoor space where there is limited space in the ceiling.

General Information

Light source replaceable	No
Number of gear units	1 unit
Driver included	Yes
Light source engine type	LED
Service tag	Yes
Value ladder	Performance
Warranty period	3 years

Light Technical

Luminous Flux	3,800 lm
Correlated Color Temperature (Nom)	3000 K
Luminous Efficacy (rated) (Nom)	105 lm/W
Color rendering index (CRI)	>80
Beam angle of light source	- degree(s)
Light source color	830 warm white
Optic type	High-gloss mirror
Luminaire light beam spread	60°
Unified glare rating CEN	20

Operating and Electrical

Input Voltage	220 to 240 V
Line Frequency	50 or 60 Hz
Inrush current	25 A
Inrush time	0.202 ms
Power Consumption	36 W
Power Factor (Fraction)	0.9
Connection	-
Cable	-
Number of products on MCB of 16 A type B	24
Suitable for random switching	No
Protection class IEC	Safety class I

Controls and Dimming

Dimmable	No
Driver/power unit/transformer	Power supply unit (On/Off)
Control interface	-
Constant light output	No

Mechanical and Housing

Housing Material	Aluminum die cast
Reflector material	Aluminum
Optic material	Aluminum
Optical cover material	-
Fixation material	-
Housing Color	White
Optical cover finish	-
Overall length	0 mm
Overall width	0 mm
Overall height	239 mm
Overall diameter	200 mm
Dimensions (Height x Width x Depth)	239 x 0 x 0 mm
Ingress protection code	IP65 [Dust penetration-protected, jet-proof]
Mech. impact protection code	IK02 [0.2 J standard]
Optical cover type	Reflector
Net Weight (Piece)	2.199 kg

Approval and Application

Glow-wire test	Temperature 750 °C, duration 5 s
Flammability mark	-
CE mark	Yes
ENEC mark	-
EU RoHS compliant	No
Ambient temperature range	-20 to +40 °C

Initial Performance (IEC Compliant)

Luminous flux tolerance	+/-10%
Initial chromaticity	(0.44, 0.40) SDCM <5
Power consumption tolerance	+/-10%

Over Time Performance (IEC Compliant)

Driver failure rate at 5000 h	1.00 %
Median useful life L70B50	50,000 hour(s)
Median useful life L80B50	40,000 hour(s)
Median useful life L90B50	20,000 hour(s)

Application Conditions

Lumen Maintenance	50000hrs

Product Data

Order product name	SM294C LED40/830 PSU WP WH GM
Full product name	SM294C LED40/830 PSU WP WH GM
Full product code	872016951952700
Order code	911401848399

Material Nr. (12NC)	911401848399
Numerator - Quantity Per Pack	1
EAN/UPC - Product/Case	8720169519527
Numerator - Packs per outer box	1
EAN/UPC - Case	8720169519527

Dimensional drawing

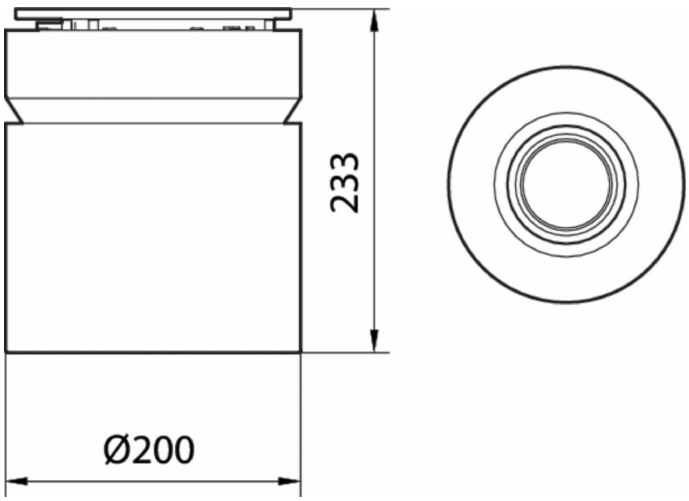

Related Documents

Documents and certificates	Document Name	Download
Installation Instructions	MI_GreenSpace Surface Mount SM291SM293SM294.pdf	Download

Photometry and lighting design	Document Name	Download
IES File	SM294C-LED40-830-PSU-WP-WH-GM-updated.ies	Download

© 2026 Signify Holding. All rights reserved. The information provided herein is subject to change, without notice. Signify does not give any representation or warranty as to the accuracy or completeness of the information included herein and shall not be liable for any action in reliance thereon. The information presented in this document is not intended as any commercial offer and does not form part of any quotation or contract, unless otherwise agreed by Signify. Philips and the Philips Shield Emblem are registered trademarks of Koninklijke Philips N.V.