Signify

UniStreet gen2

BGP281



The easy way to ledify your road lighting – UniStreet gen2

Designed for ledification projects, the UniStreet gen2 is the ideal 1:1 luminaire replacement for municipalities. Thanks to its high efficiency and low initial cost, the UniStreet gen2 luminaire enables a fast payback and significant savings in terms of energy consumption within a short period of time. The ease of installation and maintenance is enabled by the Service tag and the SR (System Ready) Zhaga socket(s) makes it future-ready, and you can pair this luminaire with lighting control or sensors and software applications such as Interact City. Available with a significant number of different optics and lumen packages that can even be tuned further to fit exact project requirements, UniStreet gen2 is a true point-to-point replacement solution for conventional or generation 1 LED light sources. The compact luminaire, using high-quality materials is also easy to dismantle and recycle at the end of its lifetime.

Benefits

- 1 to 1 replacement for conventional luminaires
- Offers high efficiency and energy savings
- Made of high-quality materials for longer lifetime and minimized maintenance

Applications

- Roads and streets
- Residential streets

Features

- Good application coverage thanks to wide range of optics, tunable flux and tillable spigot
- Easy luminaire identification due to the Service tag
- Future-ready thanks to the SR (System Ready) socket
- Luminaire is also equipped with dedicated light recipes that help with: 1) maintaining an optimal ecosystems for bats or 2) preserving a dark night sky and reduce light pollution
- Increased shock resistance with IK09 or optional IK10 glass cover

Versions



Product picture
Lumistreet gen2 Medium



Product picture
Lumistreet gen2 Mini



Product picture
Lumistreet gen2 Large



Product picture
Lumistreet gen2 Micro

Dimensional drawing

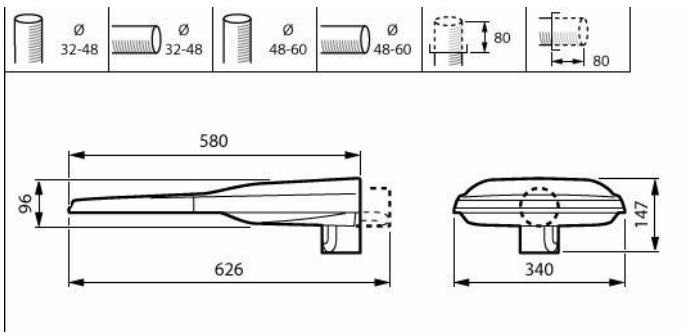

BGP283 LED220-4S/730 I DM11 DDF27 D18 SR

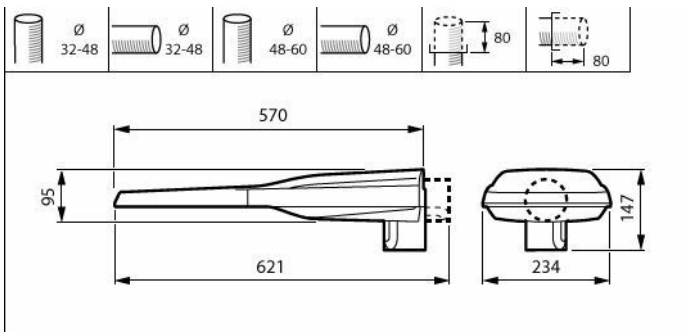

BGP282 LED80-4S/740 I DM11 D948/60S

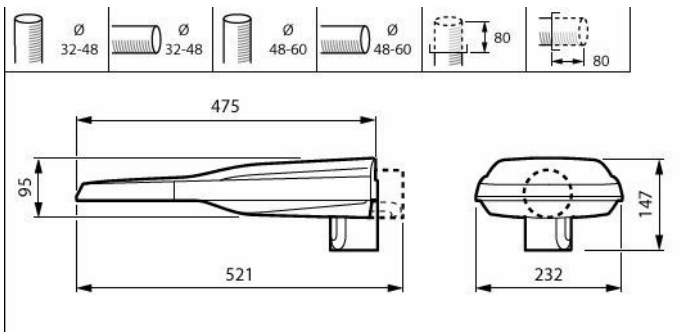

BGP281 LED59-4S/730 I DM11 DDF27 D18 SRG

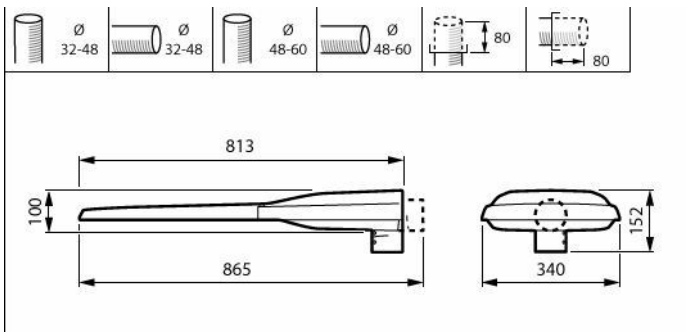

BGP284 LED380-4S/730 I DM11 DDF27 D18 SR

Product details



Lumistreet gen2 Medium bottom view



Lumistreet gen2 Medium bottom view



UniStreet_LumiStreet_gen 2



Lumistreet gen2 Large profile view



Lumistreet gen2 Large top view



Lumistreet gen2 all sizes top view

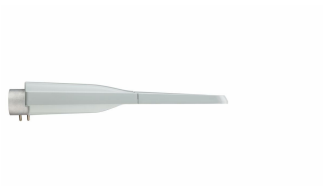

UniStreet_LumiStreet_gen 2



Lumistreet gen2 Mini bottom view



UniStreet_LumiStreet_gen 2



Lumistreet gen2 Micro bottom view



Lumistreet gen2 all sizes bottom view



UniStreet_LumiStreet_gen 2



Lumistreet gen2 all sizes Sideview



Lumistreet gen2 all sizes Sideview



Lumistreet gen2 spigot regulation



Lumistreet gen2 spigot regulation



Lumistreet gen2 Large bottom view

General Information

Light source replaceable	Yes
Driver included	Yes
Service tag	Yes

Light Technical

Upward light output ratio	0
Color rendering index (CRI)	70

Mechanical and Housing

Ingress protection code	IP66 [Dust penetration-protected, jet-proof]
Mech. impact protection code	IK09 [10 J]
Standard tilt angle posttop	0°
Standard tilt angle side entry	0°
Optical cover type	Flat glass

Approval and Application

Flammability mark	For mounting on normally flammable surfaces
CE mark	Yes

Over Time Performance (IEC Compliant)

Driver failure rate at 5000 h	0.5 %

General Information

Order Code	Full Product Name	Lamp family code	Number of gear units
910925868797	BGP283 LED220-4S/730 I DM11 DDF27 D18 SR	LED220	1 unit
910925866752	BGP282 LED80-4S/740 I DM11 D948/60S	LED80	1 unit
910925868107	BGP292 LED100-4S/730 II DM50 MSP 48/60S	LED100	1 unit
910925868108	BGP292 LED100-4S/730 II DM50 48/60S	LED100	1 unit
910925868796	BGP282 LED119-4S/730 I DM11 DDF27 D18 SR	LED119	1 unit
910925868798	BGP284 LED380-4S/730 I DM11 DDF27 D18 SR	LED380	2 units
910925868105	BGP291 LED51-4S/730 II DM50 MSP 48/60S	LED51	1 unit
910925868106	BGP291 LED51-4S/730 II DM50 48/60S	LED51	1 unit
910925868795	BGP281 LED59-4S/730 I DM11 DDF27 D18 SRG	LED59	1 unit

Light Technical

Order Code	Full Product Name	Luminous Flux	Correlated Color Temperature (Nom)	Light source color	Luminaire light beam spread	Optic type outdoor
910925868797	BGP283 LED220-4S/730 I DM11 DDF27 D18 SR	19,140 lm	3000 K	730 warm white	160° - 42° x 54°	Distribution medium 11
910925866752	BGP282 LED80-4S/740 I DM11 D948/60S	6,960 lm	4000 K	740 neutral white	160° - 42° x 54°	Distribution medium 11
910925868107	BGP292 LED100-4S/730 II DM50 MSP 48/60S	8,600 lm	3000 K	730 warm white	154° - 31° x 54°	Distribution medium 50

Order Code	Full Product Name	Luminous Flux	Correlated Color Temperature (Nom)	Light source color	Luminaire light beam spread	Optic type outdoor
910925868108	BGP292 LED100-4S/730 II DM50 48/60S	8,600 lm	3000 K	730 warm white	154° - 31° x 54°	Distribution medium 50
910925868796	BGP282 LED119-4S/730 I DM11 DDF27 D18 SR	10,440 lm	3000 K	730 warm white	160° - 42° x 54°	Distribution medium 11
910925868798	BGP284 LED380-4S/730 I DM11 DDF27 D18 SR	31,920 lm	3000 K	730 warm white	160° - 42° x 54°	Distribution medium 11
910925868105	BGP291 LED51-4S/730 II DM50 MSP 48/60S	4,524 lm	3000 K	730 warm white	154° - 31° x 54°	Distribution medium 50
910925868106	BGP291 LED51-4S/730 II DM50 48/60S	4,524 lm	3000 K	730 warm white	154° - 31° x 54°	Distribution medium 50
910925868795	BGP281 LED59-4S/730 I DM11 DDF27 D18 SRG	5,280 lm	3000 K	730 warm white	160° - 42° x 54°	Distribution medium 11

Operating and Electrical

Order Code	Full Product Name	Power Consumption	Surge Protection (Common/Differential)
910925868797	BGP283 LED220-4S/730 I DM11 DDF27 D18 SR	138 W	Surge protection level until 6 kV differential mode and 8 kV common mode
910925866752	BGP282 LED80-4S/740 I DM11 D948/60S	47 W	Surge protection level until 6 kV differential mode and 8 kV common mode
910925868107	BGP292 LED100-4S/730 II DM50 MSP 48/60S	61 W	Surge protection level until 6 kV differential mode and 8 kV common mode
910925868108	BGP292 LED100-4S/730 II DM50 48/60S	61 W	Surge protection level until 6 kV differential mode and 8 kV common mode
910925868796	BGP282 LED119-4S/730 I DM11 DDF27 D18 SR	77 W	Surge protection level until 6 kV differential mode and 8 kV common mode
910925868798	BGP284 LED380-4S/730 I DM11 DDF27 D18 SR	235 W	Surge protection level until 6 kV differential mode and 8 kV common mode
910925868105	BGP291 LED51-4S/730 II DM50 MSP 48/60S	32.5 W	Surge protection level until 6 kV differential mode and 8 kV common mode
910925868106	BGP291 LED51-4S/730 II DM50 48/60S	32.5 W	Surge protection level until 6 kV differential mode and 8 kV common mode
910925868795	BGP281 LED59-4S/730 I DM11 DDF27 D18 SRG	40 W	Surge protection level until 10 kV differential mode and 10 kV common mode

Controls and Dimming

Order Code	Full Product Name	Dimmable	Maximum dim level
910925868797	BGP283 LED220-4S/730 I DM11 DDF27 D18 SR	Yes	50%
910925866752	BGP282 LED80-4S/740 I DM11 D948/60S	Yes	0% (digital)
910925868107	BGP292 LED100-4S/730 II DM50 MSP 48/60S	No	Programmable
910925868108	BGP292 LED100-4S/730 II DM50 48/60S	No	Programmable
910925868796	BGP282 LED119-4S/730 I DM11 DDF27 D18 SR	Yes	50%

Order Code	Full Product Name	Dimmable	Maximum dim level
910925868798	BGP284 LED380-4S/730 I DM11 DDF27 D18 SR	Yes	50%
910925868105	BGP291 LED51-4S/730 II DM50 MSP 48/60S	No	Programmable
910925868106	BGP291 LED51-4S/730 II DM50 48/60S	No	Programmable
910925868795	BGP281 LED59-4S/730 I DM11 DDF27 D18 SRG	Yes	Not applicable

Mechanical and Housing

Order Code	Full Product Name	Housing Color
910925868797	BGP283 LED220-4S/730 I DM11 DDF27 D18 SR	Grey
910925866752	BGP282 LED80-4S/740 I DM11 D948/60S	Gray
910925868107	BGP292 LED100-4S/730 II DM50 MSP 48/60S	Gray
910925868108	BGP292 LED100-4S/730 II DM50 48/60S	Gray
910925868796	BGP282 LED119-4S/730 I DM11 DDF27 D18 SR	Grey
910925868798	BGP284 LED380-4S/730 I DM11 DDF27 D18 SR	Grey
910925868105	BGP291 LED51-4S/730 II DM50 MSP 48/60S	Gray
910925868106	BGP291 LED51-4S/730 II DM50 48/60S	Gray
910925868795	BGP281 LED59-4S/730 I DM11 DDF27 D18 SRG	Grey

Product Data

Order Code	Full Product Name	Product family code
910925868797	BGP283 LED220-4S/730 I DM11 DDF27 D18 SR	BGP283
910925866752	BGP282 LED80-4S/740 I DM11 D948/60S	BGP282
910925868107	BGP292 LED100-4S/730 II DM50 MSP 48/60S	BGP292
910925868108	BGP292 LED100-4S/730 II DM50 48/60S	BGP292
910925868796	BGP282 LED119-4S/730 I DM11 DDF27 D18 SR	BGP282
910925868798	BGP284 LED380-4S/730 I DM11 DDF27 D18 SR	BGP284
910925868105	BGP291 LED51-4S/730 II DM50 MSP 48/60S	BGP291
910925868106	BGP291 LED51-4S/730 II DM50 48/60S	BGP291
910925868795	BGP281 LED59-4S/730 I DM11 DDF27 D18 SRG	BGP281

Polar normal diagrams

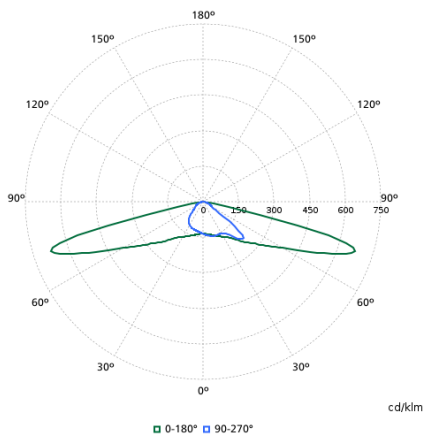

BGP282I - 910925866752

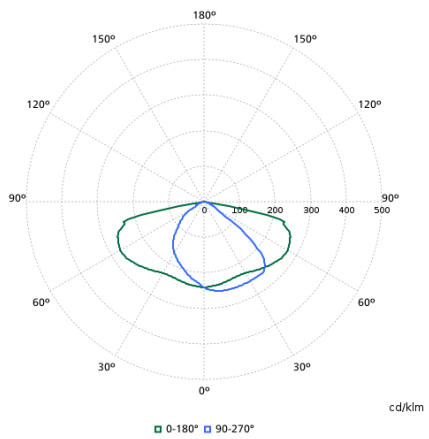

BGP281I - 910925868795

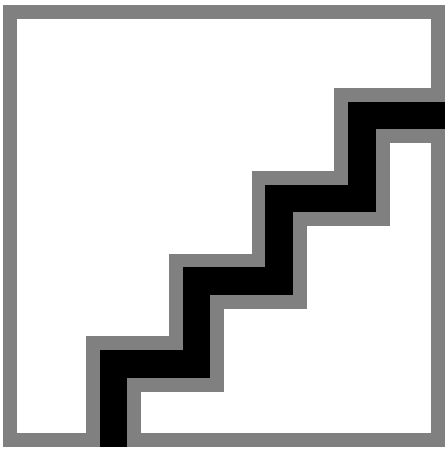

BGP282I - 910925868796

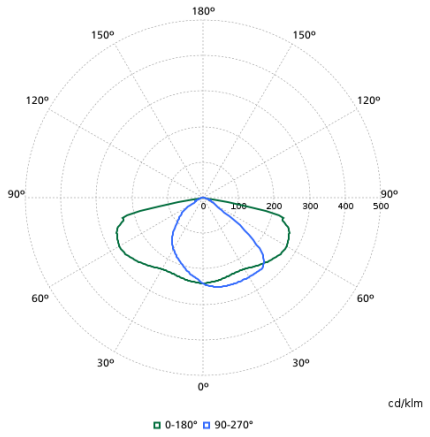

BGP284I - 910925868798

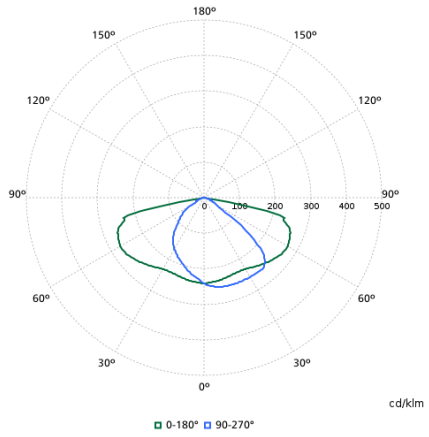

BGP283I - 910925868797

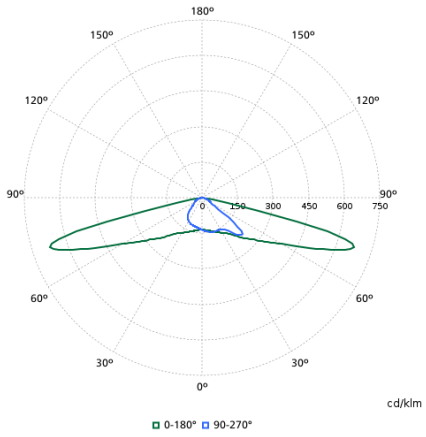

BGP281I - 910925868105

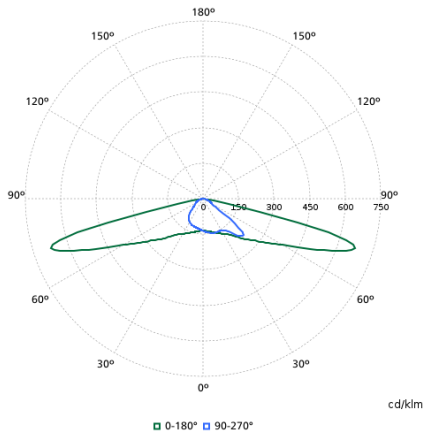

BGP282I - 910925868107

© 2026 Signify Holding. All rights reserved. The information provided herein is subject to change, without notice. Signify does not give any representation or warranty as to the accuracy or completeness of the information included herein and shall not be liable for any action in reliance thereon. The information presented in this document is not intended as any commercial offer and does not form part of any quotation or contract, unless otherwise agreed by Signify. All trademarks are owned by Signify Holding or their respective owners.