PHILIPS

TUV T5

XUTUVT5

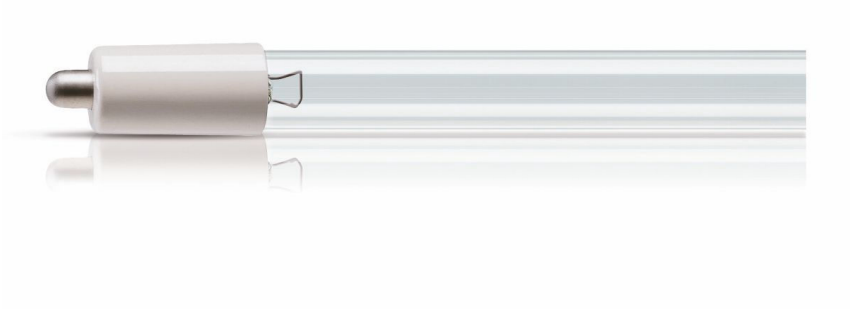

TUV T5 - Small diameter lamps for professional applications

TUV T5 lamps are single- or double-ended UV-C 253.7 nm emitting lamps. The small 16 mm diameter of the lamp allows for a small system design and design flexibility. TUV T5 lamps offer constant UV output over their complete lifetime.

Benefits

- Controlled UV-C output over lifetime of the lamp
- High system efficacy
- Good environmental choice because of lowest amount of mercury.

Applications

- Air treatment systems
- Industrial water treatment systems
- Small municipal water treatment systems
- Swimming pool units
- Residential drinking water units

Features

- Short-wave UV radiation with a peak at 253.7 nm (UV-C)
- Small diameter
- Protective inside coating ensures almost constant UV output over the complete lifetime of the lamp.
- Lamp glass filters out the 185 nm ozone-forming radiation
- High temperature and UV-resistant lamp bases
- High Output versions available for optimum UVC output per lamp length, allowing for further reduction of system size
- Warning sign on lamp indicates that the lamp radiates UVC
- A lamp breaking is extremely unlikely to have any impact on your health. If a lamp breaks, ventilate the room for 30 minutes and remove the parts, preferably with gloves. Put them in a sealed plastic bag and take it to your local waste facilities for recycling. Do not use a vacuum cleaner.
- DANGER: Risk Group 3 Ultra Violet product. These lamps emit high-power UV radiation that can cause severe injury to skin and eyes. Avoid eye and skin exposure to unshielded product. Use only in an enclosed environment which shields users from the radiation.
- Plants and/or materials that are exposed to UV-C and/or ozone for a long time may become damaged and/or discolored.

Versions



XPPR_XUTUV_0002-Product photo



XPPR XUTUV 0003



XPPR XUTUV 0004

Dimensional drawing

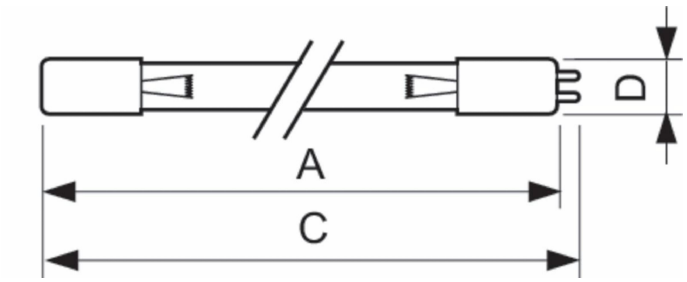

Product	D	C	
TUV 24T5 HE 4P SE	19.5 mm	700.7 mm	
TUV 24T5 HO 4P SE	19.5 mm	700.7 mm	
TUV 36T5 HE 4P SE UNP/32	19.3 mm	853 mm	845.4 mm
TUV 36T5 HO 4P SE UNP/32	19.3 mm	853 mm	845.4 mm
TUV 48T5 HE 4P SE	19.5 mm	1,156.7 mm	
TUV 48T5 HO 4P SE	19.5 mm	1,156.7 mm	
TUV 64T5 HE 4P SE UNP/32	19.3 mm	1,564.5 mm	1,556.6 mm
TUV 64T5 HO 4P SE UNP/32	19.3 mm	1,564.5 mm	1,555.2 mm

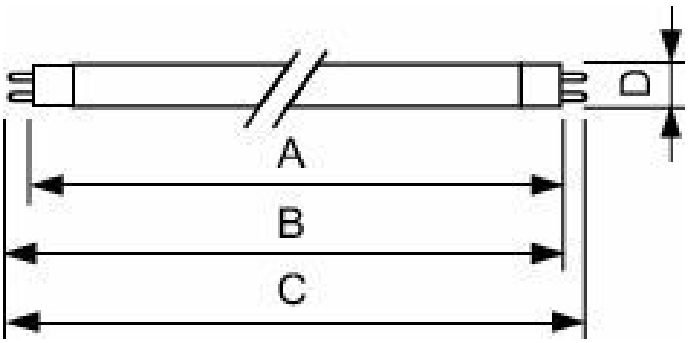

Product	D	C
TUV 36T5 HE G5 UNP 40	16 mm	827.6 mm

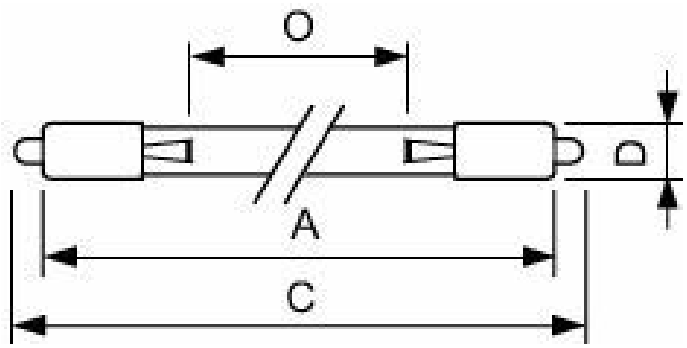

Product	D (max)	O	C (max)	A (max)
TUV 36T5 SP NO/32	18.6 mm	762 mm	863.9 mm	845.4 mm
TUV 64T5 HE SP UNP/32	18.6 mm	1,473 mm	1,575.1 mm	1,556.6 mm

General Information

Order Code	Full Product Name	Cap-Base
927948204099	TUV 24T5 HE 4P SE	-
927948304099	TUV 24T5 HO 4P SE	-
927948604099	TUV 48T5 HE 4P SE	-
927948704099	TUV 48T5 HO 4P SE	-
927970204099	TUV 36T5 HE 4P SE UNP/32	4PINSSINGLEENDED
927970704099	TUV 64T5 HE 4P SE UNP/32	4PINSSINGLEENDED
927971104099	TUV 64T5 HO 4P SE UNP/32	4PINSSINGLEENDED
927972104099	TUV 36T5 HO 4P SE UNP/32	4PINSSINGLEENDED
928000204024	TUV 36T5 HE G5 UNP 40	G5
927970004099	TUV 36T5 SP NO/32	Single Pin
927970504099	TUV 64T5 HE SP UNP/32	Single Pin

Operating and Electrical

Order Code	Full Product Name	Power Consumption	Lamp Current (Nom)
927948204099	TUV 24T5 HE 4P SE	33 W	0.425 A
927948304099	TUV 24T5 HO 4P SE	61 W	0.8 A
927948604099	TUV 48T5 HE 4P SE	58.4 W	0.425 A
927948704099	TUV 48T5 HO 4P SE	107 W	0.8 A
927970204099	TUV 36T5 HE 4P SE UNP/32	40 W	0.425 A
927970704099	TUV 64T5 HE 4P SE UNP/32	75 W	0.425 A
927971104099	TUV 64T5 HO 4P SE UNP/32	145 W	0.8 A
927972104099	TUV 36T5 HO 4P SE UNP/32	75 W	0.8 A
928000204024	TUV 36T5 HE G5 UNP 40	40 W	0.425 A
927970004099	TUV 36T5 SP NO/32	40 W	0.425 A
927970504099	TUV 64T5 HE SP UNP/32	75 W	0.425 A

Approval and Application

Order Code	Full Product Name	Mercury (Hg) Content (Nom)
927948204099	TUV 24T5 HE 4P SE	3.0 mg
927948304099	TUV 24T5 HO 4P SE	5.5 mg
927948604099	TUV 48T5 HE 4P SE	3.0 mg
927948704099	TUV 48T5 HO 4P SE	5.5 mg
927970204099	TUV 36T5 HE 4P SE UNP/32	3.0 mg
927970704099	TUV 64T5 HE 4P SE UNP/32	-
927971104099	TUV 64T5 HO 4P SE UNP/32	5.5 mg
927972104099	TUV 36T5 HO 4P SE UNP/32	5.5 mg
928000204024	TUV 36T5 HE G5 UNP 40	3.0 mg
927970004099	TUV 36T5 SP NO/32	3.0 mg
927970504099	TUV 64T5 HE SP UNP/32	3.0 mg

© 2026 Signify Holding. All rights reserved. The information provided herein is subject to change, without notice. Signify does not give any representation or warranty as to the accuracy or completeness of the information included herein and shall not be liable for any action in reliance thereon. The information presented in this document is not intended as any commercial offer and does not form part of any quotation or contract, unless otherwise agreed by Signify. Philips and the Philips Shield Emblem are registered trademarks of Koninklijke Philips N.V.