PHILIPS

GreenSpace Evo Mini Semi Recessed

ST332B



A small and sustainable projector in a sleek, subtle design

GreenSpace Evo Mini Semi Recessed is a sustainable lighting projector for recessed installation that comes with a sleek and subtle design. This makes the projector an ideal choice for hospitality and fashion retail applications. The 3D printed housing is crafted from at least 65% recycled or bio-circular materials, while the heatsink is made from 85% recycled aluminium. Because of its circular design, the luminaire is upgradable, reusable, fully serviceable and recyclable. Combined with the high energy efficiency, this makes the GreenSpace Evo Mini Semi Recessed a sustainable projector choice. The new PerfectAccent deep reflectors ensure a light effect with increased sparkle and improved shopper eye comfort.Further customization of cutout dimensions, colors and textures is possible via Philips MyCreation

Benefits

- he sleek and subtle design fits perfectly in any installation
- More sparkle and enhanced shopper eye comfort with PerfectAccent deep reflectors
- Extend the useful life of the product with easy serviceability and upgradeability
- The recycled materials and high energy efficiency help further reduce the carbon footprint of the product
- Reduced carbon footprint due to high efficacy
- Equipped with state-of-the-art PerfectAccent deep reflectors
- Connectivity options: Interact compatible DALI (DIA) and Wireless (WIA)
- Optional front glass (recommended for dusty environments)

Applications

- Fashion
- Hospitality
- Residential

- Cleaning of the optic should only be done with pressurized air. Touching the LED or reflector is forbidden. For food preparation areas and areas with high levels of dust, the use of the optional front glass is strongly advised, as it can be cleaned with a (dry) microfiber cloth
- During maintenance, the product must be switched off and cooled down
- The product must be installed out of arm's reach. Manipulating the product when hot is only possible with an insulated glove

Features

- Toolless access to the optics, LED and front glass
- Serviceable and upgradeable with standard tools

Versions



ST332B GreenSpace Evo Mini Semi-recessed - black - cutout 68



ST332B GreenSpace Evo Mini Semi-recessed - white - cutout 68



ST332B GreenSpace Evo Mini Semi-recessed - white - cutout 125

Dimensional drawing

Type	A (mm)	B (mm)	C (mm)	Cutout (mm)
RD68	68	78	126	68
RD125	125	135	183	125

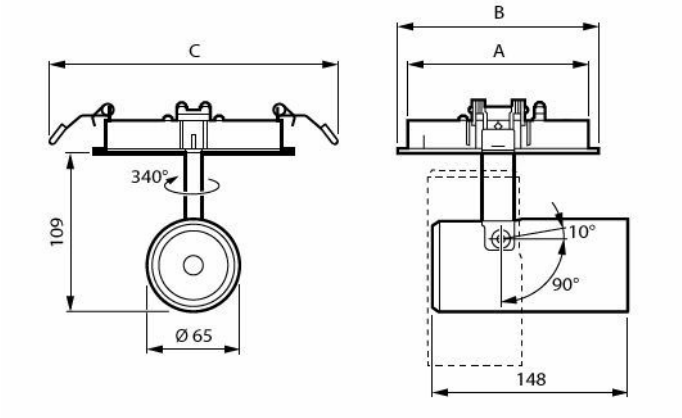

ST332B 27S/PW940 PSU-E HMB WH401125

Product details



ST332B GreenSpace Evo Mini Semi-recessed - white - cutout 68



ST332B GreenSpace Evo Mini Semi-recessed - black - cutout 68



ST332B GreenSpace Evo Mini Semi-recessed - white - cutout 125

General Information

Light source replaceable	Yes
Number of gear units	1 unit
Driver included	Yes
Service tag	Yes

Light Technical

Color rendering index (CRI)	>90

Operating and Electrical

Input Voltage	220-240 V
Line Frequency	50 to 60 Hz
Suitable for random switching	Yes
Protection class IEC	Safety class II

Mechanical and Housing

Ingress protection code	IP20 [Finger-protected]
Mech. impact protection code	IK02 [0.2 J standard]

Emergency Operation

Central Emergency	No

Approval and Application

Glow-wire test	Temperature 650 °C, duration 30 s
Flammability mark	-
CE mark	Yes
ENEC mark	-
Stroboscopic effect visibility measure (SVM)	0.4
Ambient temperature range	+10 to +35 °C

Initial Performance (IEC Compliant)

Luminous flux tolerance	-10% / +10%

Product Data

Product family code	ST332B [GreenSpace Evo Mini Semi-Recessed]

Light Technical

Order Code	Full Product Name	Luminous Flux	Correlated Color Temperature (Nom)	Luminous Efficacy (rated) (Nom)	Optic type
910505104628	ST332B 17S/PW940 DIA-E HWB BK402 68	1,700 lm	4000 K	136 lm/W	High-reflective metal reflector Wide beam 40 to 80 degrees
910505104626	ST332B 12S/PW930 PSU-E HMB WH401 68	1,100 lm	3000 K	128 lm/W	High-reflective metal reflector Medium beam 20 to 40 degrees
910505104635	ST332B 27S/PW940 PSU-E HMB WH401125	2,600 lm	4000 K	128 lm/W	High-reflective metal reflector Medium beam 20 to 40 degrees

Operating and Electrical

Order Code	Full Product Name	Power Consumption
910505104628	ST332B 17S/PW940 DIA-E HWB BK402 68	12.1 W
910505104626	ST332B 12S/PW930 PSU-E HMB WH401 68	8.6 W
910505104635	ST332B 27S/PW940 PSU-E HMB WH401125	20.1 W

Controls and Dimming

Order Code	Full Product Name	Dimmable
910505104628	ST332B 17S/PW940 DIA-E HWB BK402 68	Yes
910505104626	ST332B 12S/PW930 PSU-E HMB WH401 68	No
910505104635	ST332B 27S/PW940 PSU-E HMB WH401125	No

Mechanical and Housing

Order Code	Full Product Name	Housing Color
910505104628	ST332B 17S/PW940 DIA-E HWB BK402 68	Black
910505104626	ST332B 12S/PW930 PSU-E HMB WH401 68	White
910505104635	ST332B 27S/PW940 PSU-E HMB WH401125	White

Initial Performance (IEC Compliant)

Order Code	Full Product Name	Initial chromaticity
910505104628	ST332B 17S/PW940 DIA-E HWB BK402 68	(0.374,0.364)
910505104626	ST332B 12S/PW930 PSU-E HMB WH401 68	(0.422,0.386)
910505104635	ST332B 27S/PW940 PSU-E HMB WH401125	(0.374,0.364)

Polar normal diagrams

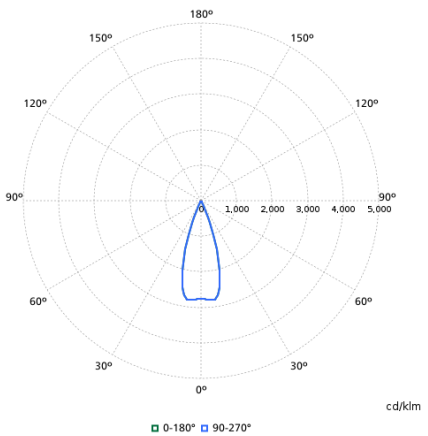

ST332B 17S/PW940 DIA-E HWB BK402 68 910505104628

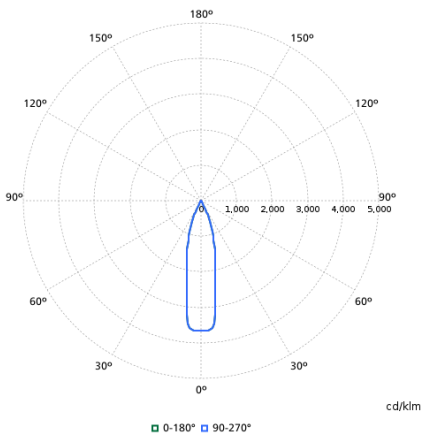

ST332B 12S/PW930 PSU-E HMB WH401 68 910505104626

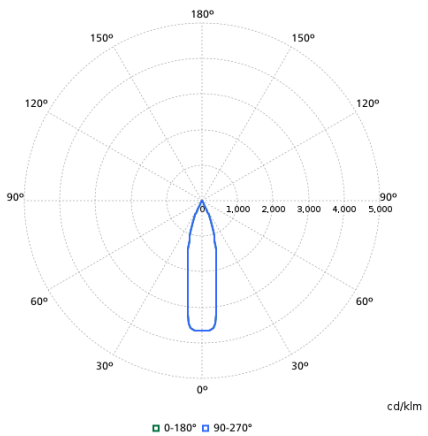

ST332B 27S/PW940 PSU-E HMB WH401125 910505104635

© 2026 Signify Holding. All rights reserved. The information provided herein is subject to change, without notice. Signify does not give any representation or warranty as to the accuracy or completeness of the information included herein and shall not be liable for any action in reliance thereon. The information presented in this document is not intended as any commercial offer and does not form part of any quotation or contract, unless otherwise agreed by Signify. Philips and the Philips Shield Emblem are registered trademarks of Koninklijke Philips N.V.