PHILIPS

HALO SPOTONE

HALOSP



Product Description

Mains voltage Halogen ALU-coated reflector lamp

Benefits

- Long life and transformer free
- Well directed lights
- Safe to use
- GLS retrofit

Applications

- Indoor accent/task lighting, down lighting

Features

- Mains voltage halogen (life time = 2000 hours)
- Precisely positioned burner inside ALU-coated reflector
- With two safety fuses
- With E27, B22, E14 lamp base

Versions



50 W E27 cap Halogen reflector bulb - RFT

Dimensional drawing

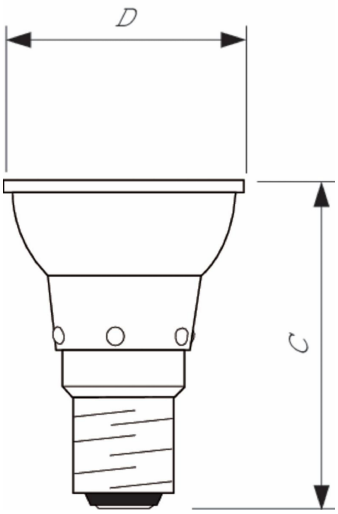

Product	D (max)	C (max)
50 W E27 cap Dimmable Halogen reflector bulb	50.7 mm	64 mm

General Information

Cap-Base	E27
Operating Position	UNIVERSAL [Any or Universal (U)]
Nominal lifetime	2,000 hour(s)
Rated Lifetime (Hours)	2,000 hour(s)

Light Technical

Beam Angle (Nom)	30 degree(s)
Color rendering index (CRI)	100

Operating and Electrical

Power Consumption	50 W
Warm-up time to 60% light	instant full light s
Voltage (Nom)	120 V

Controls and Dimming

Dimmable	Yes

Mechanical and Housing

Bulb Shape	JDR

© 2026 Signify Holding. All rights reserved. The information provided herein is subject to change, without notice. Signify does not give any representation or warranty as to the accuracy or completeness of the information included herein and shall not be liable for any action in reliance thereon. The information presented in this document is not intended as any commercial offer and does not form part of any quotation or contract, unless otherwise agreed by Signify. Philips and the Philips Shield Emblem are registered trademarks of Koninklijke Philips N.V.