PHILIPS

## DN 391B LED6S-4000 PSU WH

919515810483



# Dimmable high Performance LED downlight for indoors

GreenPerform is a high performance Led downlight family suitable for use in a series of Lighting applications in Office, Retail and General Area Lighting. Available in a wide variety of lumen packs, color temp and options of all type of dimming(Phase Cut/Analogue/DALI), GreenPerform becomes the perfect solution for downlight applications for professional users.

### Warnings and Safety

- Meant for use in Indoor environment only

### General Information

| | |
|---|---|
| Driver included | Yes |
| Light source engine type | LED |
| Warranty period | 3 years |

### Light Technical

| | |
|---|---|
| Luminous Flux | 600 lm |
| Correlated Color Temperature (Nom) | 4000 K |
| Luminous Efficacy (rated) (Nom) | 100 lm/W |
| Color rendering index (CRI) | >80 |
| Beam angle of light source | 120 degree(s) |
| Light source color | 840 neutral white |
| Optic type | - |
| Luminaire light beam spread | 120° |

## Operating and Electrical

| | |
|---|---|
| Input Voltage | 220-240 V |
| Line Frequency | 50 Hz |
| Power Consumption | 6.5 W |
| Power Factor (Fraction) | 0.9 |
| Protection class IEC | Safety class I |
| Surge Protection (Common/ Differential) | 2.5 kV kV |

## Controls and Dimming

| | |
|---|---|
| Dimmable | No |
| Control interface | - |

## Mechanical and Housing

| | |
|---|---|
| Housing Material | Aluminum Alloy |
| Optic material | Polycarbonate |
| Optical cover material | Polycarbonate |
| Housing Color | White |
| Mounting device | Spring clip for recess mounting |
| Overall height | 60 mm |
| Overall diameter | 100 mm |
| Material | Aluminum |
| Ingress protection code | IP20 [Finger-protected] |
| Mech. impact protection code | IK02 [0.2 J standard] |

## Dimensional drawing

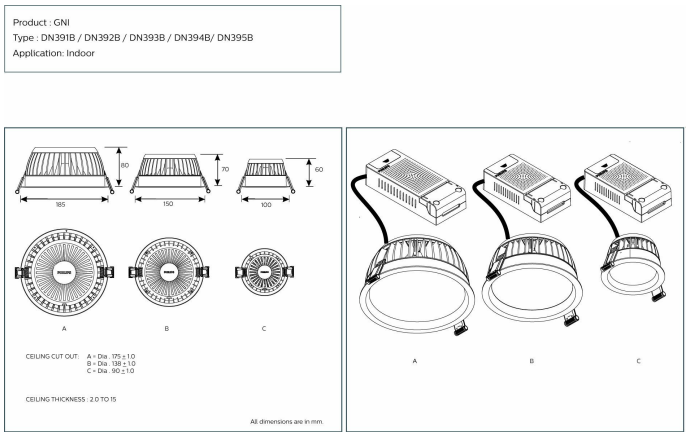


| | |
|---|---|
| Optical cover type | Polycarbonate |
| Net Weight (Piece) | 0.300 kg |

## Approval and Application

| | |
|---|---|
| Flammability mark | For mounting on normally flammable surfaces |
| Ambient temperature range | 0 to +45 °C |

## Initial Performance (IEC Compliant)

| | |
|---|---|
| Power consumption tolerance | +/-10% |

## Over Time Performance (IEC Compliant)

| | |
|---|---|
| Median useful life L70B50 | 40,000 hour(s) |

## Product Data

| | |
|---|---|
| Order product name | DN 391B LED6S-4000 PSU WH |
| Full product name | DN 391B LED6S-4000 PSU WH |
| Order code | 919515810483 |
| Material Nr. (12NC) | 919515810483 |
| Numerator - Quantity Per Pack | 1 |
| Numerator - Packs per outer box | 8 |

© 2026 Signify Holding. All rights reserved. The information provided herein is subject to change, without notice. Signify does not give any representation or warranty as to the accuracy or completeness of the information included herein and shall not be liable for any action in reliance thereon. The information presented in this document is not intended as any commercial offer and does not form part of any quotation or contract, unless otherwise agreed by Signify. Philips and the Philips Shield Emblem are registered trademarks of Koninklijke Philips N.V.