PHILIPS

Circline

F_FCIR



Lamp Description

T9 4-Pin Circular Fluorescent Lamps.

Versions



40W T9 Cool White Circline Fluorescent - RFT



22W T9 Daylight Deluxe Circline Fluorescent - RFT

Data subject to change



22W T9 Soft White Circline Fluorescent - RFT



32W T9 Soft White Circline Fluorescent - RFT



LPPR TL-ESTDR G10q C-T9



32W T9 Cool White Circline Fluorescent - RFT



32W T9 Daylight Deluxe Circline Fluorescent - RFT

Dimensional drawing

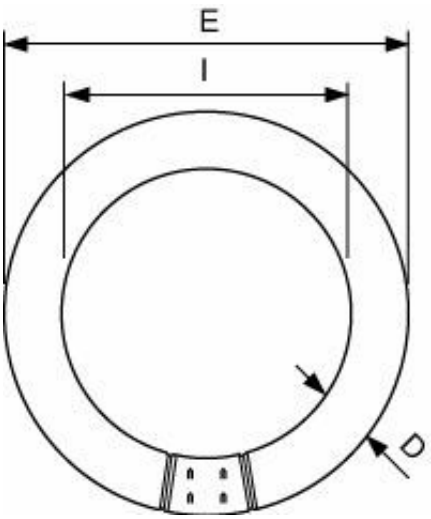

Product	D (max)	D (min)	E (min)	E (max)	I (min)	I (max)
22W T9 Bright White Circline Fluorescent	31.0 mm	26.2 mm	203.2 mm	215.9 mm	149.1 mm	155.7 mm
32W T9 Soft White Circline Fluorescent	31.0 mm	26.2 mm	292.1 mm	304.8 mm	239.5 mm	246.1 mm

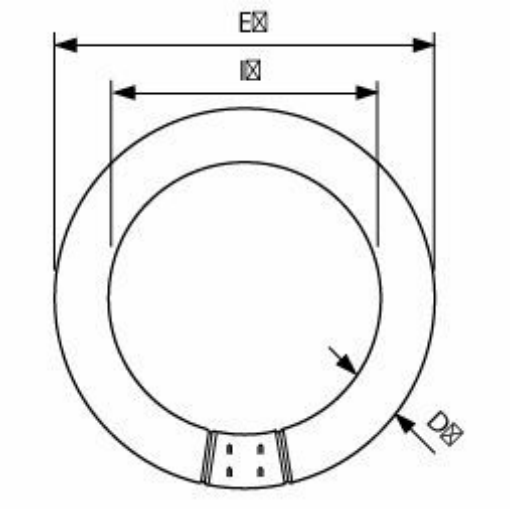

Product	D (max)	D (min)	E (min)	E (max)	I (min)	I (max)
22W T9 Daylight Deluxe Circline Fluorescent	31.0 mm	26.2 mm	203.2 mm	215.9 mm	149.1 mm	155.7 mm
32W T9 Cool White Circline Fluorescent	31.0 mm	26.2 mm	292.1 mm	304.8 mm	239.5 mm	246.1 mm
32W T9 Daylight Deluxe Circline Fluorescent	31.0 mm	26.2 mm	292.1 mm	304.8 mm	239.5 mm	246.1 mm
40W T9 Cool White Circline Fluorescent	30.9 mm	27.1 mm	393.7 mm	406.4 mm	341.0 mm	347.7 mm
FC8T9/COOL WHITE PLUS	31.0 mm	26.2 mm	203.2 mm	215.9 mm	149.1 mm	155.7 mm

General Information

Cap-Base	G10q

Controls and Dimming

Dimmable	No

Mechanical and Housing

Bulb Shape	C-T29

Approval and Application

Mercury (Hg) Content (Nom)	8.0 mg

Light Technical

Order Code	Full Product Name	Luminous Flux	Color Designation	Correlated Color Temperature (Nom)	Color rendering index (CRI)
928028803335	40W T9 Cool White Circline Fluorescent	2,500 lm	Cool White (CW)	4100 K	62
928028405435	22W T9 Daylight Deluxe Circline Fluorescent	910 lm	Cool Daylight	6200 K	79
928028483035	22W T9 Bright White Circline Fluorescent	1,150 lm	Bright White	3000 K	80
928028683035	32W T9 Soft White Circline Fluorescent	1,900 lm	Warm White (WW)	3000 K	85
928028403335	FC8T9/COOL WHITE PLUS	1,050 lm	Cool White (CW)	4100 K	62
928028603335	32W T9 Cool White Circline Fluorescent	1,800 lm	Cool White (CW)	4100 K	62
928028605435	32W T9 Daylight Deluxe Circline Fluorescent	1,570 lm	Cool Daylight	6200 K	79

Operating and Electrical

Order Code	Full Product Name	Power Consumption	Lamp Current (Nom)	Voltage (Nom)
928028803335	40W T9 Cool White Circline Fluorescent	40 W	0.42 A	109 V
928028405435	22W T9 Daylight Deluxe Circline Fluorescent	20.5 W	0.37 A	61 V
928028483035	22W T9 Bright White Circline Fluorescent	22 W	0.37 A	61 V
928028683035	32W T9 Soft White Circline Fluorescent	32 W	0.43 A	84 V
928028403335	FC8T9/COOL WHITE PLUS	20.5 W	0.37 A	61 V
928028603335	32W T9 Cool White Circline Fluorescent	32 W	0.43 A	84 V
928028605435	32W T9 Daylight Deluxe Circline Fluorescent	32 W	0.43 A	84 V

© 2026 Signify Holding. All rights reserved. The information provided herein is subject to change, without notice. Signify does not give any representation or warranty as to the accuracy or completeness of the information included herein and shall not be liable for any action in reliance thereon. The information presented in this document is not intended as any commercial offer and does not form part of any quotation or contract, unless otherwise agreed by Signify. Philips and the Philips Shield Emblem are registered trademarks of Koninklijke Philips N.V.