PHILIPS

Deep Recessed Spotlight

8880292



Deep Recessed Spotlight with the Tri-layer optics design allows to achieve the anti-glare feature, which is an icon Tech in the market currently.

Deep Recessed offers excellent experience for the consumer, which includs eye comfort, reliable quality and outstanding performance, expecially the anti glare feature.

Benefits

- Comfortable LED light that's easy on eyes
- Long lifetime
- Reliable & Outstanding Performance

Applications

- Retail
- Offices
- Hospitality

Features

- Tri-layer Optic Thec
- EyeComfort
- Outstanding performance
- Safe to use & Reliable Quality

Versions



RS350 G2 RC SQ



RS350 G2 RC Rd D75 1H GC



RS350 G2 SF RD



RS350 G2 RC SQ L100x2 2H 20240516



RS350 G2 RC Rd D55 1H GC



RS350 G2 RC Rd D100 1H GC



RS350_G2_SF_SQ



RS350 G2 RC RD

Dimensional drawing

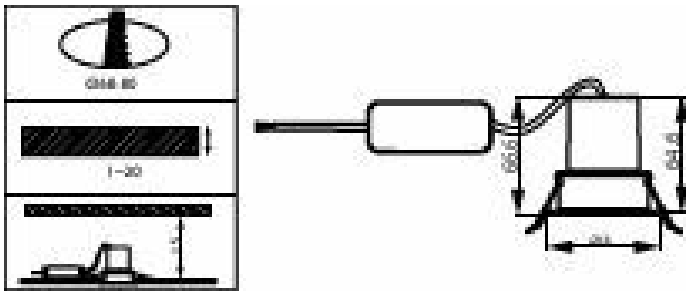

RS350 G2 RC Rd D55 4W 40K 36D 1H

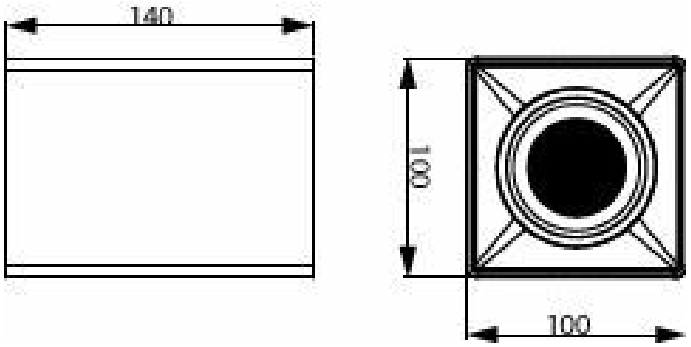

RS350 G2 SF Sq L100 11W 30K 24D 1H

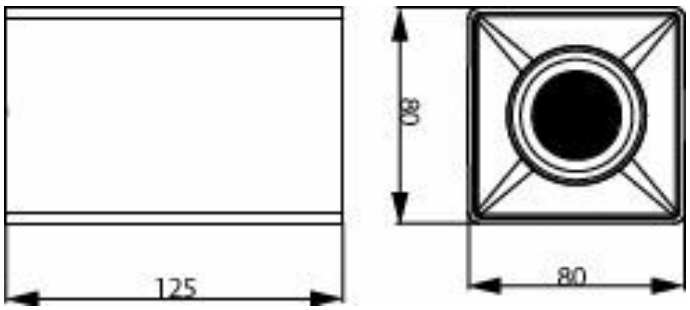

RS350 G2 SF Sq L80 7W 40K 24D 1H

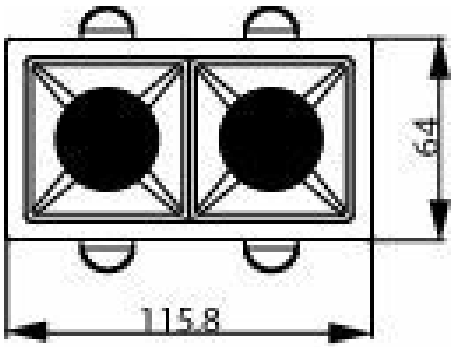

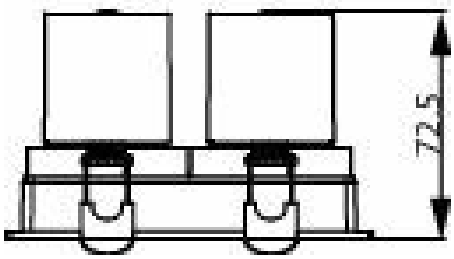

RS350 G2 RC Sq L55 2*7W 30K 24D 2H

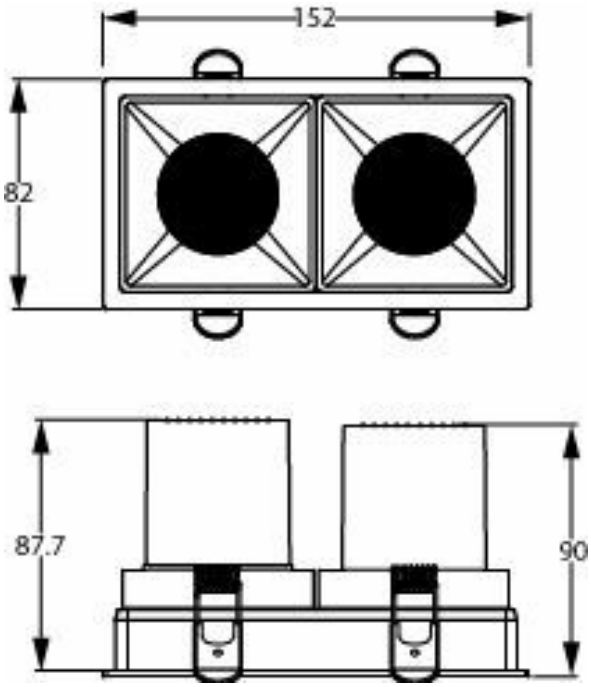

RS350 G2 RC Sq L75 2*11W 30K 24D 2H

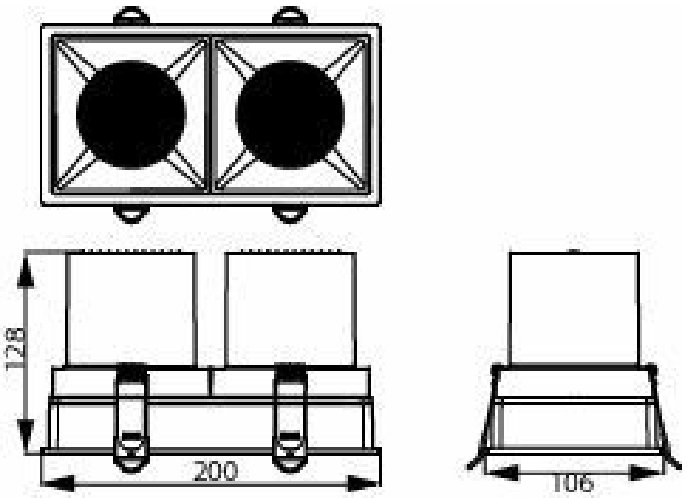

RS350 G2 RC Sq L100 2*23W 40K 24D 2H

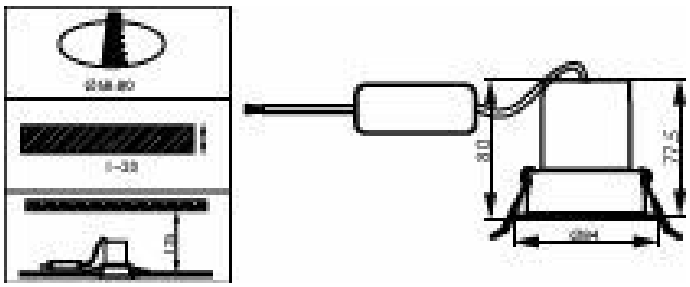

RS350 G2 RC Rd D75 9W 35K 24D 1H

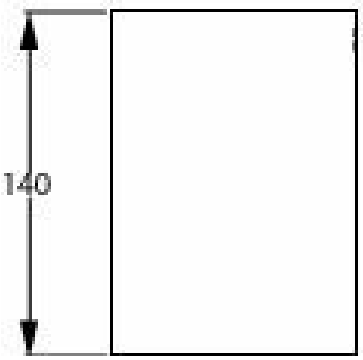

RS350 G2 SF Rd D100 9W 30K 24D 1H

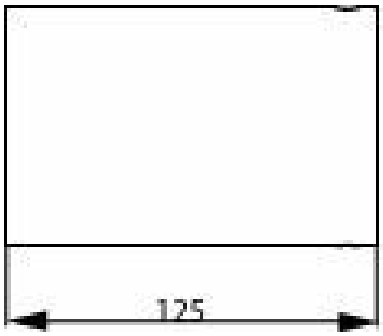

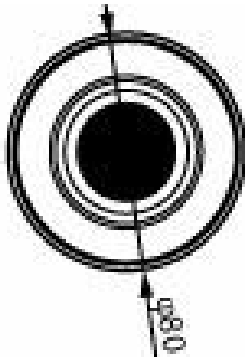

RS350 G2 SF Rd D80 7W 40K 24D 1H

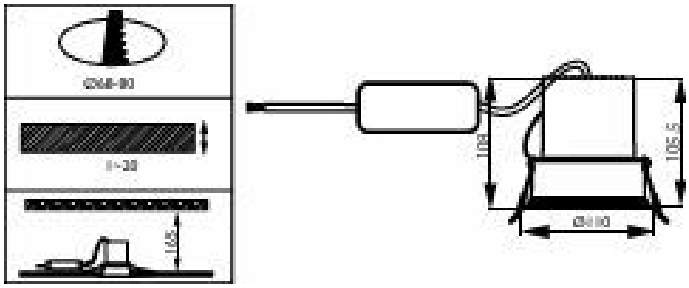

RS350 G2 RC Rd D100 15W 30K 36D 1H

Product details



RS350 G2 RD back

General Information

Light source replaceable	No

Light Technical

Color rendering index (CRI)	90

Controls and Dimming

Dimmable	No

Mechanical and Housing

Ingress protection code	IP20 [Finger-protected]

Approval and Application

Glow-wire test	Temperature 650 °C, duration 30 s
Flammability mark	For mounting on normally flammable surfaces
Ambient temperature range	-20 to +40 °C

Over Time Performance (IEC Compliant)

Driver failure rate at 5000 h	0.015 %

General Information

Order Code	Full Product Name	Number of gear units	Driver included
929003222610	RS350 G2 RC Sq L55 2*7W 30K 24D 2H	1 unit	Yes
929003222710	RS350 G2 RC Sq L55 2*7W 30K 36D 2H	1 unit	Yes
929003222810	RS350 G2 RC Sq L55 2*7W 40K 24D 2H	1 unit	Yes
929003222910	RS350 G2 RC Sq L55 2*7W 40K 36D 2H	1 unit	Yes
929003223410	RS350 G2 RC Sq L75 2*11W 30K 24D 2H	1 unit	Yes
929003223510	RS350 G2 RC Sq L75 2*11W 30K 36D 2H	1 unit	Yes
929003223610	RS350 G2 RC Sq L75 2*11W 40K 24D 2H	1 unit	Yes
929003223710	RS350 G2 RC Sq L75 2*11W 40K 36D 2H	1 unit	Yes
929003216210	RS350 G2 RC Rd D75 7W 30K 24D 1H	1 unit	Yes
929003216310	RS350 G2 RC Rd D75 7W 30K 36D 1H	1 unit	Yes
929003216410	RS350 G2 RC Rd D75 7W 30K 50D 1H	1 unit	Yes
929003216510	RS350 G2 RC Rd D75 7W 40K 24D 1H	1 unit	Yes
929003216710	RS350 G2 RC Rd D75 7W 40K 50D 1H	1 unit	Yes
929003216810	RS350 G2 RC Rd D75 9W 30K 24D 1H	1 unit	Yes
929003216910	RS350 G2 RC Rd D75 9W 30K 36D 1H	1 unit	Yes
929003217010	RS350 G2 RC Rd D75 9W 30K 50D 1H	1 unit	Yes
929003217110	RS350 G2 RC Rd D75 9W 40K 24D 1H	1 unit	Yes
929003217210	RS350 G2 RC Rd D75 9W 40K 36D 1H	1 unit	Yes
929003217310	RS350 G2 RC Rd D75 9W 40K 50D 1H	1 unit	Yes
929003217410	RS350 G2 RC Rd D75 11W 30K 24D 1H	1 unit	Yes
929003217510	RS350 G2 RC Rd D75 11W 30K 36D 1H	1 unit	Yes
929003217610	RS350 G2 RC Rd D75 11W 30K 50D 1H	1 unit	Yes
929003217710	RS350 G2 RC Rd D75 11W 40K 24D 1H	1 unit	Yes
929003217810	RS350 G2 RC Rd D75 11W 40K 36D 1H	1 unit	Yes
929003217910	RS350 G2 RC Rd D75 11W 40K 50D 1H	1 unit	Yes
929004098710	RS350 G2 RC Rd D75 11W 27K 15D 1H	1 unit	Yes
929004098810	RS350 G2 RC Rd D75 11W 30K 15D 1H	1 unit	Yes
929004098910	RS350 G2 RC Rd D75 11W 35K 15D 1H	1 unit	Yes
929004099010	RS350 G2 RC Rd D75 11W 40K 15D 1H	1 unit	Yes
929003220010	RS350 G2 SF Rd D100 11W 30K 24D 1H	10 units	Yes
929003220210	RS350 G2 SF Rd D100 11W 40K 24D 1H	12 units	Yes
929003220410	RS350 G2 SF Rd D100 9W 30K 24D 1H	14 units	Yes
929003220610	RS350 G2 SF Rd D100 9W 40K 24D 1H	18 units	Yes
929003224210	RS350 G2 SF Rd D80 7W 30K 24D 1H	62 units	Yes
929003224410	RS350 G2 SF Rd D80 7W 40K 24D 1H	64 units	Yes
929004129910	RS350 G2 RC Sq L100 2*15W 30K 24D 2H	2 units	Yes
929004130010	RS350 G2 RC Sq L100 2*15W 30K 36D 2H	2 units	Yes
929004130110	RS350 G2 RC Sq L100 2*15W 40K 24D 2H	2 units	Yes
929004130210	RS350 G2 RC Sq L100 2*15W 40K 36D 2H	2 units	Yes
929004130310	RS350 G2 RC Sq L100 2*23W 30K 24D 2H	2 units	Yes
929004130410	RS350 G2 RC Sq L100 2*23W 30K 36D 2H	2 units	Yes

Order Code	Full Product Name	Number of gear units	Driver included
929004130510	RS350 G2 RC Sq L100 2*23W 40K 24D 2H	2 units	Yes
929004130610	RS350 G2 RC Sq L100 2*23W 40K 36D 2H	2 units	Yes
929003214410	RS350 G2 RC Rd D55 4W 30K 24D 1H	1 unit	Yes
929003214510	RS350 G2 RC Rd D55 4W 30K 36D 1H	1 unit	Yes
929003214710	RS350 G2 RC Rd D55 4W 40K 24D 1H	1 unit	Yes
929003214810	RS350 G2 RC Rd D55 4W 40K 36D 1H	1 unit	Yes
929003215010	RS350 G2 RC Rd D55 7W 30K 24D 1H	1 unit	Yes
929003215110	RS350 G2 RC Rd D55 7W 30K 36D 1H	1 unit	Yes
929003215310	RS350 G2 RC Rd D55 7W 40K 24D 1H	1 unit	Yes
929003215410	RS350 G2 RC Rd D55 7W 40K 36D 1H	1 unit	Yes
929003219110	RS350 G2 RC Rd D100 23W 40K 50D 1H	1 unit	Yes
929004099110	RS350 G2 RC Rd D100 15W 30K 24D 1H	1 unit	Yes
929004099210	RS350 G2 RC Rd D100 15W 30K 36D 1H	1 unit	Yes
929004099410	RS350 G2 RC Rd D100 15W 40K 24D 1H	1 unit	Yes
929004099510	RS350 G2 RC Rd D100 15W 40K 36D 1H	1 unit	Yes
929003219310	RS350 G2 RC Sq L100 *2 30K 36D 2H	-	No
929003219410	RS350 G2 RC Sq L100 *2 40K 24D 2H	-	No
929003220810	RS350 G2 SF Sq L100 11W 30K 24D 1H	20 units	Yes
929003221010	RS350 G2 SF Sq L100 11W 40K 24D 1H	22 units	Yes
929003221210	RS350 G2 SF Sq L100 9W 30K 24D 1H	24 units	Yes
929003221410	RS350 G2 SF Sq L100 9W 40K 24D 1H	26 units	Yes
929003225010	RS350 G2 SF Sq L80 7W 30K 24D 1H	70 units	Yes
929003225210	RS350 G2 SF Sq L80 7W 40K 24D 1H	72 units	Yes
929003340210	RS350 G2 RC Rd D75 7W 27K 24D 1H	-	-
929003340410	RS350 G2 RC Rd D75 7W 35K 24D 1H	-	-
929003340510	RS350 G2 RC Rd D75 7W 35K 50D 1H	-	-
929003340610	RS350 G2 RC Rd D75 9W 27K 24D 1H	-	-
929003340810	RS350 G2 RC Rd D75 9W 35K 24D 1H	-	-
929003340910	RS350 G2 RC Rd D75 9W 35K 50D 1H	-	-
929003341010	RS350 G2 RC Rd D75 11W 27K 24D 1H	-	-
929003341210	RS350 G2 RC Rd D75 11W 35K 24D 1H	-	-
929003341310	RS350 G2 RC Rd D75 11W 35K 50D 1H	-	-
929003343410	RS350 G2 RC Rd D75 7W 27K 36D 1H	-	-
929003343510	RS350 G2 RC Rd D75 7W 35K 36D 1H	-	-
929003343610	RS350 G2 RC Rd D75 9W 27K 36D 1H	-	-
929003343710	RS350 G2 RC Rd D75 9W 35K 36D 1H	-	-
929003343810	RS350 G2 RC Rd D75 11W 27K 36D 1H	-	-
929003343910	RS350 G2 RC Rd D75 11W 35K 36D 1H	-	-

Light Technical

Order Code	Full Product Name	Luminous Flux	Correlated Color Temperature (Nom)	Luminous Efficacy (rated) (Nom)	Number of light sources	Optic type
929003222610	RS350 G2 RC Sq L55 2*7W 30K 24D 2H	1,080 lm	3000 K	77 lm/W	2	Beam angle 24°
929003222710	RS350 G2 RC Sq L55 2*7W 30K 36D 2H	1,080 lm	3000 K	77 lm/W	2	Beam angle 36°
929003222810	RS350 G2 RC Sq L55 2*7W 40K 24D 2H	1,160 lm	4000 K	82 lm/W	2	Beam angle 24°
929003222910	RS350 G2 RC Sq L55 2*7W 40K 36D 2H	1,160 lm	4000 K	82 lm/W	2	Beam angle 36°
929003223410	RS350 G2 RC Sq L75 2*11W 30K 24D 2H	2,000 lm	3000 K	90 lm/W	2	Beam angle 24°
929003223510	RS350 G2 RC Sq L75 2*11W 30K 36D 2H	2,000 lm	3000 K	90 lm/W	2	Beam angle 36°
929003223610	RS350 G2 RC Sq L75 2*11W 40K 24D 2H	2,160 lm	4000 K	98 lm/W	2	Beam angle 24°
929003223710	RS350 G2 RC Sq L75 2*11W 40K 36D 2H	2,160 lm	4000 K	98 lm/W	2	Beam angle 36°
929003216210	RS350 G2 RC Rd D75 7W 30K 24D 1H	560 lm	3000 K	80.00 lm/W	-	Beam angle 36°
929003216310	RS350 G2 RC Rd D75 7W 30K 36D 1H	560 lm	3000 K	80.00 lm/W	-	Beam angle 36°
929003216410	RS350 G2 RC Rd D75 7W 30K 50D 1H	560 lm	3000 K	80.00 lm/W	-	Beam angle 50°
929003216510	RS350 G2 RC Rd D75 7W 40K 24D 1H	600 lm	4000 K	85.71 lm/W	-	Beam angle 24°
929003216710	RS350 G2 RC Rd D75 7W 40K 50D 1H	600 lm	4000 K	85.00 lm/W	-	Beam angle 50°
929003216810	RS350 G2 RC Rd D75 9W 30K 24D 1H	730 lm	3000 K	81.11 lm/W	-	Beam angle 24°
929003216910	RS350 G2 RC Rd D75 9W 30K 36D 1H	730 lm	3000 K	81.11 lm/W	-	Beam angle 36°
929003217010	RS350 G2 RC Rd D75 9W 30K 50D 1H	730 lm	3000 K	81.11 lm/W	-	Beam angle 36°
929003217110	RS350 G2 RC Rd D75 9W 40K 24D 1H	800 lm	4000 K	88.89 lm/W	-	Beam angle 24°
929003217210	RS350 G2 RC Rd D75 9W 40K 36D 1H	800 lm	4000 K	88.89 lm/W	-	Beam angle 36°
929003217310	RS350 G2 RC Rd D75 9W 40K 50D 1H	800 lm	4000 K	88.00 lm/W	-	Beam angle 36°
929003217410	RS350 G2 RC Rd D75 11W 30K 24D 1H	1,000 lm	3000 K	90.91 lm/W	-	Beam angle 36°
929003217510	RS350 G2 RC Rd D75 11W 30K 36D 1H	1,000 lm	3000 K	90.91 lm/W	-	Beam angle 36°
929003217610	RS350 G2 RC Rd D75 11W 30K 50D 1H	1,000 lm	3000 K	90.91 lm/W	-	Beam angle 36°
929003217710	RS350 G2 RC Rd D75 11W 40K 24D 1H	1,080 lm	4000 K	98.18 lm/W	-	Beam angle 36°
929003217810	RS350 G2 RC Rd D75 11W 40K 36D 1H	1,080 lm	4000 K	98.18 lm/W	-	Beam angle 36°
929003217910	RS350 G2 RC Rd D75 11W 40K 50D 1H	1,080 lm	4000 K	98.18 lm/W	-	Beam angle 36°
929004098710	RS350 G2 RC Rd D75 11W 27K 15D 1H	900 lm	2700 K	81 lm/W	1	High-gloss mirror
929004098810	RS350 G2 RC Rd D75 11W 30K 15D 1H	950 lm	3000 K	86 lm/W	1	High-gloss mirror
929004098910	RS350 G2 RC Rd D75 11W 35K 15D 1H	1,000 lm	3500 K	90 lm/W	1	High-gloss mirror
929004099010	RS350 G2 RC Rd D75 11W 40K 15D 1H	1,050 lm	4000 K	95 lm/W	1	High-gloss mirror
929003220010	RS350 G2 SF Rd D100 11W 30K 24D 1H	1,000 lm	3000 K	90 lm/W	-	Beam angle 24°
929003220210	RS350 G2 SF Rd D100 11W 40K 24D 1H	1,080 lm	4000 K	98 lm/W	-	Beam angle 24°
929003220410	RS350 G2 SF Rd D100 9W 30K 24D 1H	730 lm	3000 K	81 lm/W	-	Beam angle 24°
929003220610	RS350 G2 SF Rd D100 9W 40K 24D 1H	800 lm	4000 K	88 lm/W	-	Beam angle 24°
929003224210	RS350 G2 SF Rd D80 7W 30K 24D 1H	540 lm	3000 K	77 lm/W	-	Beam angle 24°
929003224410	RS350 G2 SF Rd D80 7W 40K 24D 1H	580 lm	4000 K	82 lm/W	-	Beam angle 24°
929004129910	RS350 G2 RC Sq L100 2*15W 30K 24D 2H	3,000 lm	3000 K	100 lm/W	2	High-gloss mirror
929004130010	RS350 G2 RC Sq L100 2*15W 30K 36D 2H	3,000 lm	3000 K	100 lm/W	2	High-gloss mirror
929004130110	RS350 G2 RC Sq L100 2*15W 40K 24D 2H	3,200 lm	4000 K	106 lm/W	2	High-gloss mirror
929004130210	RS350 G2 RC Sq L100 2*15W 40K 36D 2H	3,200 lm	4000 K	106 lm/W	2	High-gloss mirror

Order Code	Full Product Name	Luminous Flux	Correlated Color Temper-ature (Nom)	Luminous Efficacy (rated) (Nom)	Number of light sources	Optic type
929004130310	RS350 G2 RC Sq L100 2*23W 30K 24D 2H	4,000 lm	3000 K	87 lm/W	2	High-gloss mirror
929004130410	RS350 G2 RC Sq L100 2*23W 30K 36D 2H	4,000 lm	3000 K	87 lm/W	2	High-gloss mirror
929004130510	RS350 G2 RC Sq L100 2*23W 40K 24D 2H	4,300 lm	4000 K	93 lm/W	2	High-gloss mirror
929004130610	RS350 G2 RC Sq L100 2*23W 40K 36D 2H	4,300 lm	4000 K	93 lm/W	2	High-gloss mirror
929003214410	RS350 G2 RC Rd D55 4W 30K 24D 1H	350 lm	3000 K	87.50 lm/W	-	Beam angle 24°
929003214510	RS350 G2 RC Rd D55 4W 30K 36D 1H	350 lm	3000 K	87.50 lm/W	-	Beam angle 36°
929003214710	RS350 G2 RC Rd D55 4W 40K 24D 1H	370 lm	4000 K	92.50 lm/W	-	Beam angle 24°
929003214810	RS350 G2 RC Rd D55 4W 40K 36D 1H	370 lm	4000 K	92.50 lm/W	-	Beam angle 36°
929003215010	RS350 G2 RC Rd D55 7W 30K 24D 1H	540 lm	3000 K	77.14 lm/W	-	Beam angle 36°
929003215110	RS350 G2 RC Rd D55 7W 30K 36D 1H	540 lm	3000 K	77.14 lm/W	-	Beam angle 36°
929003215310	RS350 G2 RC Rd D55 7W 40K 24D 1H	580 lm	4000 K	82.86 lm/W	-	Beam angle 36°
929003215410	RS350 G2 RC Rd D55 7W 40K 36D 1H	580 lm	4000 K	82.86 lm/W	-	Beam angle 36°
929003219110	RS350 G2 RC Rd D100 23W 40K 50D 1H	2,050 lm	4000 K	89.13 lm/W	-	Beam angle 36°
929004099110	RS350 G2 RC Rd D100 15W 30K 24D 1H	1,500 lm	3000 K	100 lm/W	1	High-gloss mirror
929004099210	RS350 G2 RC Rd D100 15W 30K 36D 1H	1,500 lm	3000 K	100 lm/W	1	High-gloss mirror
929004099410	RS350 G2 RC Rd D100 15W 40K 24D 1H	1,600 lm	4000 K	106 lm/W	1	High-gloss mirror
929004099510	RS350 G2 RC Rd D100 15W 40K 36D 1H	1,600 lm	4000 K	106 lm/W	1	High-gloss mirror
929003219310	RS350 G2 RC Sq L100 *2 30K 36D 2H	4,000 lm	3000 K	105 lm/W	2	Beam angle 36°
929003219410	RS350 G2 RC Sq L100 *2 40K 24D 2H	4,300 lm	4000 K	113 lm/W	2	Beam angle 24°
929003220810	RS350 G2 SF Sq L100 11W 30K 24D 1H	1,000 lm	3000 K	90 lm/W	-	Beam angle 24°
929003221010	RS350 G2 SF Sq L100 11W 40K 24D 1H	1,080 lm	4000 K	98 lm/W	-	Beam angle 24°
929003221210	RS350 G2 SF Sq L100 9W 30K 24D 1H	730 lm	3000 K	81 lm/W	-	Beam angle 24°
929003221410	RS350 G2 SF Sq L100 9W 40K 24D 1H	800 lm	4000 K	88 lm/W	-	Beam angle 24°
929003225010	RS350 G2 SF Sq L80 7W 30K 24D 1H	540 lm	3000 K	77 lm/W	-	Beam angle 24°
929003225210	RS350 G2 SF Sq L80 7W 40K 24D 1H	580 lm	4000 K	82 lm/W	-	Beam angle 24°
929003340210	RS350 G2 RC Rd D75 7W 27K 24D 1H	530 lm	2700 K	75 lm/W	-	-
929003340410	RS350 G2 RC Rd D75 7W 35K 24D 1H	580 lm	3500 K	82 lm/W	-	-
929003340510	RS350 G2 RC Rd D75 7W 35K 50D 1H	580 lm	3500 K	82 lm/W	-	-
929003340610	RS350 G2 RC Rd D75 9W 27K 24D 1H	700 lm	2700 K	77 lm/W	-	-
929003340810	RS350 G2 RC Rd D75 9W 35K 24D 1H	770 lm	3500 K	85 lm/W	-	-
929003340910	RS350 G2 RC Rd D75 9W 35K 50D 1H	770 lm	3500 K	85 lm/W	-	-
929003341010	RS350 G2 RC Rd D75 11W 27K 24D 1H	950 lm	2700 K	86 lm/W	-	-
929003341210	RS350 G2 RC Rd D75 11W 35K 24D 1H	1,060 lm	3500 K	96 lm/W	-	-
929003341310	RS350 G2 RC Rd D75 11W 35K 50D 1H	1,060 lm	3500 K	96 lm/W	-	-
929003343410	RS350 G2 RC Rd D75 7W 27K 36D 1H	530 lm	2700 K	75 lm/W	-	-
929003343510	RS350 G2 RC Rd D75 7W 35K 36D 1H	580 lm	3500 K	82 lm/W	-	-
929003343610	RS350 G2 RC Rd D75 9W 27K 36D 1H	700 lm	2700 K	77 lm/W	-	-
929003343710	RS350 G2 RC Rd D75 9W 35K 36D 1H	770 lm	3500 K	85 lm/W	-	-
929003343810	RS350 G2 RC Rd D75 11W 27K 36D 1H	950 lm	2700 K	86 lm/W	-	-
929003343910	RS350 G2 RC Rd D75 11W 35K 36D 1H	1,060 lm	3500 K	96 lm/W	-	-

Operating and Electrical

Order Code	Full Product Name	Input Voltage	Line Frequency	Power Consumption	Suitable for random switching	Protection class IEC
929003222610	RS350 G2 RC Sq L55 2*7W 30K 24D 2H	220 to 240 V	50 or 60 Hz	-	No	Safety class II
929003222710	RS350 G2 RC Sq L55 2*7W 30K 36D 2H	220 to 240 V	50 or 60 Hz	-	No	Safety class II
929003222810	RS350 G2 RC Sq L55 2*7W 40K 24D 2H	220 to 240 V	50 or 60 Hz	-	No	Safety class II
929003222910	RS350 G2 RC Sq L55 2*7W 40K 36D 2H	220 to 240 V	50 or 60 Hz	-	No	Safety class II
929003223410	RS350 G2 RC Sq L75 2*11W 30K 24D 2H	220 to 240 V	50 or 60 Hz	-	No	Safety class II
929003223510	RS350 G2 RC Sq L75 2*11W 30K 36D 2H	220 to 240 V	50 or 60 Hz	-	No	Safety class II
929003223610	RS350 G2 RC Sq L75 2*11W 40K 24D 2H	220 to 240 V	50 or 60 Hz	-	No	Safety class II
929003223710	RS350 G2 RC Sq L75 2*11W 40K 36D 2H	220 to 240 V	50 or 60 Hz	-	No	Safety class II
929003216210	RS350 G2 RC Rd D75 7W 30K 24D 1H	220 to 240 V	50 or 60 Hz	7 W	No	Safety class II
929003216310	RS350 G2 RC Rd D75 7W 30K 36D 1H	220 to 240 V	50 or 60 Hz	7 W	No	Safety class II
929003216410	RS350 G2 RC Rd D75 7W 30K 50D 1H	220 to 240 V	50 or 60 Hz	7 W	No	Safety class II
929003216510	RS350 G2 RC Rd D75 7W 40K 24D 1H	220 to 240 V	50 or 60 Hz	7 W	No	Safety class II
929003216710	RS350 G2 RC Rd D75 7W 40K 50D 1H	220 to 240 V	50 or 60 Hz	7 W	No	Safety class II
929003216810	RS350 G2 RC Rd D75 9W 30K 24D 1H	220 to 240 V	50 or 60 Hz	9 W	No	Safety class II
929003216910	RS350 G2 RC Rd D75 9W 30K 36D 1H	220 to 240 V	50 or 60 Hz	9 W	No	Safety class II
929003217010	RS350 G2 RC Rd D75 9W 30K 50D 1H	220 to 240 V	50 or 60 Hz	9 W	No	Safety class II
929003217110	RS350 G2 RC Rd D75 9W 40K 24D 1H	220 to 240 V	50 or 60 Hz	9 W	No	Safety class II
929003217210	RS350 G2 RC Rd D75 9W 40K 36D 1H	220 to 240 V	50 or 60 Hz	9 W	No	Safety class II
929003217310	RS350 G2 RC Rd D75 9W 40K 50D 1H	220 to 240 V	50 or 60 Hz	9 W	No	Safety class II
929003217410	RS350 G2 RC Rd D75 11W 30K 24D 1H	220 to 240 V	50 or 60 Hz	11 W	No	Safety class II
929003217510	RS350 G2 RC Rd D75 11W 30K 36D 1H	220 to 240 V	50 or 60 Hz	11 W	No	Safety class II
929003217610	RS350 G2 RC Rd D75 11W 30K 50D 1H	220 to 240 V	50 or 60 Hz	11 W	No	Safety class II
929003217710	RS350 G2 RC Rd D75 11W 40K 24D 1H	220 to 240 V	50 or 60 Hz	11 W	No	Safety class II
929003217810	RS350 G2 RC Rd D75 11W 40K 36D 1H	220 to 240 V	50 or 60 Hz	11 W	No	Safety class II
929003217910	RS350 G2 RC Rd D75 11W 40K 50D 1H	220 to 240 V	50 or 60 Hz	11 W	No	Safety class II
929004098710	RS350 G2 RC Rd D75 11W 27K 15D 1H	220 to 240 V	-	11 W	Not applicable	Safety class II
929004098810	RS350 G2 RC Rd D75 11W 30K 15D 1H	220 to 240 V	-	11 W	Not applicable	Safety class II
929004098910	RS350 G2 RC Rd D75 11W 35K 15D 1H	220 to 240 V	-	11 W	Not applicable	Safety class II
929004099010	RS350 G2 RC Rd D75 11W 40K 15D 1H	220 to 240 V	-	11 W	Not applicable	Safety class II
929003220010	RS350 G2 SF Rd D100 11W 30K 24D 1H	220 to 240 V	50 or 60 Hz	11 W	No	Safety class II
929003220210	RS350 G2 SF Rd D100 11W 40K 24D 1H	220 to 240 V	50 or 60 Hz	11 W	No	Safety class II
929003220410	RS350 G2 SF Rd D100 9W 30K 24D 1H	220 to 240 V	50 or 60 Hz	9 W	No	Safety class II
929003220610	RS350 G2 SF Rd D100 9W 40K 24D 1H	220 to 240 V	50 or 60 Hz	9 W	No	Safety class II
929003224210	RS350 G2 SF Rd D80 7W 30K 24D 1H	220 to 240 V	50 or 60 Hz	7 W	No	Safety class II
929003224410	RS350 G2 SF Rd D80 7W 40K 24D 1H	220 to 240 V	50 or 60 Hz	7 W	No	Safety class II
929004129910	RS350 G2 RC Sq L100 2*15W 30K 24D 2H	220 to 240 V	-	30 W	Not applicable	Safety class II
929004130010	RS350 G2 RC Sq L100 2*15W 30K 36D 2H	220 to 240 V	-	30 W	Not applicable	Safety class II
929004130110	RS350 G2 RC Sq L100 2*15W 40K 24D 2H	220 to 240 V	-	30 W	Not applicable	Safety class II
929004130210	RS350 G2 RC Sq L100 2*15W 40K 36D 2H	220 to 240 V	-	30 W	Not applicable	Safety class II

Order Code	Full Product Name	Input Voltage	Line Frequency	Power Consumption	Suitable for random switching	Protection class IEC
929004130310	RS350 G2 RC Sq L100 2*23W 30K 24D 2H	220 to 240 V	-	46 W	Not applicable	Safety class II
929004130410	RS350 G2 RC Sq L100 2*23W 30K 36D 2H	220 to 240 V	-	46 W	Not applicable	Safety class II
929004130510	RS350 G2 RC Sq L100 2*23W 40K 24D 2H	220 to 240 V	-	46 W	Not applicable	Safety class II
929004130610	RS350 G2 RC Sq L100 2*23W 40K 36D 2H	220 to 240 V	-	46 W	Not applicable	Safety class II
929003214410	RS350 G2 RC Rd D55 4W 30K 24D 1H	220 to 240 V	50 or 60 Hz	4 W	No	Safety class II
929003214510	RS350 G2 RC Rd D55 4W 30K 36D 1H	220 to 240 V	50 or 60 Hz	4 W	No	Safety class II
929003214710	RS350 G2 RC Rd D55 4W 40K 24D 1H	220 to 240 V	50 or 60 Hz	4 W	No	Safety class II
929003214810	RS350 G2 RC Rd D55 4W 40K 36D 1H	220 to 240 V	50 or 60 Hz	4 W	No	Safety class II
929003215010	RS350 G2 RC Rd D55 7W 30K 24D 1H	220 to 240 V	50 or 60 Hz	7 W	No	Safety class II
929003215110	RS350 G2 RC Rd D55 7W 30K 36D 1H	220 to 240 V	50 or 60 Hz	7 W	No	Safety class II
929003215310	RS350 G2 RC Rd D55 7W 40K 24D 1H	220 to 240 V	50 or 60 Hz	7 W	No	Safety class II
929003215410	RS350 G2 RC Rd D55 7W 40K 36D 1H	220 to 240 V	50 or 60 Hz	7 W	No	Safety class II
929003219110	RS350 G2 RC Rd D100 23W 40K 50D 1H	220 to 240 V	50 or 60 Hz	23 W	No	Safety class II
929004099110	RS350 G2 RC Rd D100 15W 30K 24D 1H	220 to 240 V	-	15 W	Not applicable	Safety class II
929004099210	RS350 G2 RC Rd D100 15W 30K 36D 1H	220 to 240 V	-	15 W	Not applicable	Safety class II
929004099410	RS350 G2 RC Rd D100 15W 40K 24D 1H	220 to 240 V	-	15 W	Not applicable	Safety class II
929004099510	RS350 G2 RC Rd D100 15W 40K 36D 1H	220 to 240 V	-	15 W	Not applicable	Safety class II
929003219310	RS350 G2 RC Sq L100 *2 30K 36D 2H	Max 33-40 V	- Hz	-	No	Safety class III
929003219410	RS350 G2 RC Sq L100 *2 40K 24D 2H	Max 33-40 V	- Hz	-	No	Safety class III
929003220810	RS350 G2 SF Sq L100 11W 30K 24D 1H	220 to 240 V	50 or 60 Hz	11 W	No	Safety class II
929003221010	RS350 G2 SF Sq L100 11W 40K 24D 1H	220 to 240 V	50 or 60 Hz	11 W	No	Safety class II
929003221210	RS350 G2 SF Sq L100 9W 30K 24D 1H	220 to 240 V	50 or 60 Hz	9 W	No	Safety class II
929003221410	RS350 G2 SF Sq L100 9W 40K 24D 1H	220 to 240 V	50 or 60 Hz	9 W	No	Safety class II
929003225010	RS350 G2 SF Sq L80 7W 30K 24D 1H	220 to 240 V	50 or 60 Hz	7 W	No	Safety class II
929003225210	RS350 G2 SF Sq L80 7W 40K 24D 1H	220 to 240 V	50 or 60 Hz	7 W	No	Safety class II
929003340210	RS350 G2 RC Rd D75 7W 27K 24D 1H	220 V	50 or 60 Hz	7 W	-	Safety class II
929003340410	RS350 G2 RC Rd D75 7W 35K 24D 1H	220 V	50 or 60 Hz	7 W	-	Safety class II
929003340510	RS350 G2 RC Rd D75 7W 35K 50D 1H	220 V	50 or 60 Hz	7 W	-	Safety class II
929003340610	RS350 G2 RC Rd D75 9W 27K 24D 1H	220 V	50 or 60 Hz	9 W	-	Safety class II
929003340810	RS350 G2 RC Rd D75 9W 35K 24D 1H	220 V	50 or 60 Hz	9 W	-	Safety class II
929003340910	RS350 G2 RC Rd D75 9W 35K 50D 1H	220 V	50 or 60 Hz	9 W	-	Safety class II
929003341010	RS350 G2 RC Rd D75 11W 27K 24D 1H	220 V	50 or 60 Hz	11 W	-	Safety class II
929003341210	RS350 G2 RC Rd D75 11W 35K 24D 1H	220 V	50 or 60 Hz	11 W	-	Safety class II
929003341310	RS350 G2 RC Rd D75 11W 35K 50D 1H	220 V	50 or 60 Hz	11 W	-	Safety class II
929003343410	RS350 G2 RC Rd D75 7W 27K 36D 1H	220 V	50 or 60 Hz	7 W	-	Safety class II
929003343510	RS350 G2 RC Rd D75 7W 35K 36D 1H	220 V	50 or 60 Hz	7 W	-	Safety class II
929003343610	RS350 G2 RC Rd D75 9W 27K 36D 1H	220 V	50 or 60 Hz	9 W	-	Safety class II
929003343710	RS350 G2 RC Rd D75 9W 35K 36D 1H	220 V	50 or 60 Hz	9 W	-	Safety class II
929003343810	RS350 G2 RC Rd D75 11W 27K 36D 1H	220 V	50 or 60 Hz	11 W	-	Safety class II
929003343910	RS350 G2 RC Rd D75 11W 35K 36D 1H	220 V	50 or 60 Hz	11 W	-	Safety class II

Mechanical and Housing

Order Code	Full Product Name	Housing Color	Mech. impact protection code
929003222610	RS350 G2 RC Sq L55 2*7W 30K 24D 2H	White	IK03
929003222710	RS350 G2 RC Sq L55 2*7W 30K 36D 2H	White	IK03
929003222810	RS350 G2 RC Sq L55 2*7W 40K 24D 2H	White	IK03
929003222910	RS350 G2 RC Sq L55 2*7W 40K 36D 2H	White	IK03
929003223410	RS350 G2 RC Sq L75 2*11W 30K 24D 2H	Gray	IK03
929003223510	RS350 G2 RC Sq L75 2*11W 30K 36D 2H	Gray	IK03
929003223610	RS350 G2 RC Sq L75 2*11W 40K 24D 2H	Gray	IK03
929003223710	RS350 G2 RC Sq L75 2*11W 40K 36D 2H	Gray	IK03
929003216210	RS350 G2 RC Rd D75 7W 30K 24D 1H	Gray	IK03
929003216310	RS350 G2 RC Rd D75 7W 30K 36D 1H	Gray	IK03
929003216410	RS350 G2 RC Rd D75 7W 30K 50D 1H	Gray	IK03
929003216510	RS350 G2 RC Rd D75 7W 40K 24D 1H	Gray	IK03
929003216710	RS350 G2 RC Rd D75 7W 40K 50D 1H	Gray	IK03
929003216810	RS350 G2 RC Rd D75 9W 30K 24D 1H	Gray	IK03
929003216910	RS350 G2 RC Rd D75 9W 30K 36D 1H	Gray	IK03
929003217010	RS350 G2 RC Rd D75 9W 30K 50D 1H	Gray	IK03
929003217110	RS350 G2 RC Rd D75 9W 40K 24D 1H	Gray	IK03
929003217210	RS350 G2 RC Rd D75 9W 40K 36D 1H	Gray	IK03
929003217310	RS350 G2 RC Rd D75 9W 40K 50D 1H	Gray	IK03
929003217410	RS350 G2 RC Rd D75 11W 30K 24D 1H	Gray	IK03
929003217510	RS350 G2 RC Rd D75 11W 30K 36D 1H	Gray	IK03
929003217610	RS350 G2 RC Rd D75 11W 30K 50D 1H	Gray	IK03
929003217710	RS350 G2 RC Rd D75 11W 40K 24D 1H	Gray	IK03
929003217810	RS350 G2 RC Rd D75 11W 40K 36D 1H	Gray	IK03
929003217910	RS350 G2 RC Rd D75 11W 40K 50D 1H	Gray	IK03
929004098710	RS350 G2 RC Rd D75 11W 27K 15D 1H	Dark gray	IK03
929004098810	RS350 G2 RC Rd D75 11W 30K 15D 1H	Dark gray	IK03
929004098910	RS350 G2 RC Rd D75 11W 35K 15D 1H	Dark gray	IK03
929004099010	RS350 G2 RC Rd D75 11W 40K 15D 1H	Dark gray	IK03
929003220010	RS350 G2 SF Rd D100 11W 30K 24D 1H	White	IK03
929003220210	RS350 G2 SF Rd D100 11W 40K 24D 1H	White	IK03
929003220410	RS350 G2 SF Rd D100 9W 30K 24D 1H	White	IK03
929003220610	RS350 G2 SF Rd D100 9W 40K 24D 1H	White	IK03
929003224210	RS350 G2 SF Rd D80 7W 30K 24D 1H	White	IK03
929003224410	RS350 G2 SF Rd D80 7W 40K 24D 1H	White	IK03
929004129910	RS350 G2 RC Sq L100 2*15W 30K 24D 2H	Dark gray	IK03
929004130010	RS350 G2 RC Sq L100 2*15W 30K 36D 2H	Dark gray	IK03
929004130110	RS350 G2 RC Sq L100 2*15W 40K 24D 2H	Dark gray	IK03
929004130210	RS350 G2 RC Sq L100 2*15W 40K 36D 2H	Dark gray	IK03
929004130310	RS350 G2 RC Sq L100 2*23W 30K 24D 2H	Dark gray	IK03
929004130410	RS350 G2 RC Sq L100 2*23W 30K 36D 2H	Dark gray	IK03

Order Code	Full Product Name	Housing Color	Mech. impact protection code
929004130510	RS350 G2 RC Sq L100 2*23W 40K 24D 2H	Dark gray	IK03
929004130610	RS350 G2 RC Sq L100 2*23W 40K 36D 2H	Dark gray	IK03
929003214410	RS350 G2 RC Rd D55 4W 30K 24D 1H	Gray	IK03
929003214510	RS350 G2 RC Rd D55 4W 30K 36D 1H	Gray	IK03
929003214710	RS350 G2 RC Rd D55 4W 40K 24D 1H	Gray	IK03
929003214810	RS350 G2 RC Rd D55 4W 40K 36D 1H	Gray	IK03
929003215010	RS350 G2 RC Rd D55 7W 30K 24D 1H	Gray	IK03
929003215110	RS350 G2 RC Rd D55 7W 30K 36D 1H	Gray	IK03
929003215310	RS350 G2 RC Rd D55 7W 40K 24D 1H	Gray	IK03
929003215410	RS350 G2 RC Rd D55 7W 40K 36D 1H	Gray	IK03
929003219110	RS350 G2 RC Rd D100 23W 40K 50D 1H	Gray	IK03
929004099110	RS350 G2 RC Rd D100 15W 30K 24D 1H	Dark gray	IK03
929004099210	RS350 G2 RC Rd D100 15W 30K 36D 1H	Dark gray	IK03
929004099410	RS350 G2 RC Rd D100 15W 40K 24D 1H	Dark gray	IK03
929004099510	RS350 G2 RC Rd D100 15W 40K 36D 1H	Dark gray	IK03
929003219310	RS350 G2 RC Sq L100 *2 30K 36D 2H	Grey	IK03
929003219410	RS350 G2 RC Sq L100 *2 40K 24D 2H	Grey	IK03
929003220810	RS350 G2 SF Sq L100 11W 30K 24D 1H	White	IK03
929003221010	RS350 G2 SF Sq L100 11W 40K 24D 1H	White	IK03
929003221210	RS350 G2 SF Sq L100 9W 30K 24D 1H	White	IK03
929003221410	RS350 G2 SF Sq L100 9W 40K 24D 1H	White	IK03
929003225010	RS350 G2 SF Sq L80 7W 30K 24D 1H	White	IK03
929003225210	RS350 G2 SF Sq L80 7W 40K 24D 1H	White	IK03
929003340210	RS350 G2 RC Rd D75 7W 27K 24D 1H	Dark gray	-
929003340410	RS350 G2 RC Rd D75 7W 35K 24D 1H	Dark gray	-
929003340510	RS350 G2 RC Rd D75 7W 35K 50D 1H	Dark gray	-
929003340610	RS350 G2 RC Rd D75 9W 27K 24D 1H	Dark gray	-
929003340810	RS350 G2 RC Rd D75 9W 35K 24D 1H	Dark gray	-
929003340910	RS350 G2 RC Rd D75 9W 35K 50D 1H	Dark gray	-
929003341010	RS350 G2 RC Rd D75 11W 27K 24D 1H	Dark gray	-
929003341210	RS350 G2 RC Rd D75 11W 35K 24D 1H	Dark gray	-
929003341310	RS350 G2 RC Rd D75 11W 35K 50D 1H	Dark gray	-
929003343410	RS350 G2 RC Rd D75 7W 27K 36D 1H	Dark gray	-
929003343510	RS350 G2 RC Rd D75 7W 35K 36D 1H	Dark gray	-
929003343610	RS350 G2 RC Rd D75 9W 27K 36D 1H	Dark gray	-
929003343710	RS350 G2 RC Rd D75 9W 35K 36D 1H	Dark gray	-
929003343810	RS350 G2 RC Rd D75 11W 27K 36D 1H	Dark gray	-
929003343910	RS350 G2 RC Rd D75 11W 35K 36D 1H	Dark gray	-

Initial Performance (IEC Compliant)

Order Code	Full Product Name	Luminous flux tolerance	Initial chromaticity
929003222610	RS350 G2 RC Sq L55 2*7W 30K 24D 2H	+/-10%	《 , 0.4369 ， , 0.404 》5SDCM

Order Code	Full Product Name	Luminous flux tolerance	Initial chromaticity
929003222710	RS350 G2 RC Sq L55 2*7W 30K 36D 2H	+/-10%	《 , 0.4369 ， , 0.404 》5SDCM
929003222810	RS350 G2 RC Sq L55 2*7W 40K 24D 2H	+/-10%	《 , 0.3804 ， , 0.3767 》5SDCM
929003222910	RS350 G2 RC Sq L55 2*7W 40K 36D 2H	+/-10%	《 , 0.3804 ， , 0.3767 》5SDCM
929003223410	RS350 G2 RC Sq L75 2*11W 30K 24D 2H	+/-10%	《 , 0.4341 ， , 0.3993 》5SDCM
929003223510	RS350 G2 RC Sq L75 2*11W 30K 36D 2H	+/-10%	《 , 0.4341 ， , 0.3993 》5SDCM
929003223610	RS350 G2 RC Sq L75 2*11W 40K 24D 2H	+/-10%	《 , 0.3732 ， , 0.3641 》5SDCM
929003223710	RS350 G2 RC Sq L75 2*11W 40K 36D 2H	+/-10%	《 , 0.3732 ， , 0.3641 》5SDCM
929003216210	RS350 G2 RC Rd D75 7W 30K 24D 1H	+/-10%	(0.4369, 0.404) 5SDCM
929003216310	RS350 G2 RC Rd D75 7W 30K 36D 1H	+/-10%	(0.4369, 0.404) 5SDCM
929003216410	RS350 G2 RC Rd D75 7W 30K 50D 1H	+/-10%	(0.4369, 0.404) 5SDCM
929003216510	RS350 G2 RC Rd D75 7W 40K 24D 1H	+/-10%	(0.3804, 0.3767) 5SDCM
929003216710	RS350 G2 RC Rd D75 7W 40K 50D 1H	+/-10%	(0.3804, 0.3767) 5SDCM
929003216810	RS350 G2 RC Rd D75 9W 30K 24D 1H	+/-10%	(0.4369, 0.404) 5SDCM
929003216910	RS350 G2 RC Rd D75 9W 30K 36D 1H	+/-10%	(0.4369, 0.404) 5SDCM
929003217010	RS350 G2 RC Rd D75 9W 30K 50D 1H	+/-10%	(0.4369, 0.404) 5SDCM
929003217110	RS350 G2 RC Rd D75 9W 40K 24D 1H	+/-10%	(0.3804, 0.3767) 5SDCM
929003217210	RS350 G2 RC Rd D75 9W 40K 36D 1H	+/-10%	(0.3804, 0.3767) 5SDCM
929003217310	RS350 G2 RC Rd D75 9W 40K 50D 1H	+/-10%	(0.3804, 0.3767) 5SDCM
929003217410	RS350 G2 RC Rd D75 11W 30K 24D 1H	+/-10%	(0.4341, 0.3993) 5SDCM
929003217510	RS350 G2 RC Rd D75 11W 30K 36D 1H	+/-10%	(0.4341, 0.3993) 5SDCM
929003217610	RS350 G2 RC Rd D75 11W 30K 50D 1H	+/-10%	(0.4341, 0.3993) 5SDCM
929003217710	RS350 G2 RC Rd D75 11W 40K 24D 1H	+/-10%	(0.3732, 0.3641) 5SDCM
929003217810	RS350 G2 RC Rd D75 11W 40K 36D 1H	+/-10%	(0.3732, 0.3641) 5SDCM
929003217910	RS350 G2 RC Rd D75 11W 40K 50D 1H	+/-10%	(0.3732, 0.3641) 5SDCM
929004098710	RS350 G2 RC Rd D75 11W 27K 15D 1H	+/-10%	(0.4620, 0.4074) <5SDCM
929004098810	RS350 G2 RC Rd D75 11W 30K 15D 1H	+/-10%	(0.4373, 0.4006) <5SDCM
929004098910	RS350 G2 RC Rd D75 11W 35K 15D 1H	+/-10%	(0.4033, 0.3800) <5SDCM
929004099010	RS350 G2 RC Rd D75 11W 40K 15D 1H	+/-10%	(0.3777, 0.3659) <5SDCM
929003220010	RS350 G2 SF Rd D100 11W 30K 24D 1H	+/-10%	《 , 0.4341 ， , 0.3993 》5SDCM
929003220210	RS350 G2 SF Rd D100 11W 40K 24D 1H	+/-10%	《 , 0.3732 ， , 0.3641 》5SDCM
929003220410	RS350 G2 SF Rd D100 9W 30K 24D 1H	+/-10%	《 , 0.4369 ， , 0.404 》5SDCM
929003220610	RS350 G2 SF Rd D100 9W 40K 24D 1H	+/-10%	《 , 0.3804 ， , 0.3767 》5SDCM
929003224210	RS350 G2 SF Rd D80 7W 30K 24D 1H	+/-10%	《 , 0.4369 ， , 0.404 》5SDCM
929003224410	RS350 G2 SF Rd D80 7W 40K 24D 1H	+/-10%	《 , 0.3804 ， , 0.3767 》5SDCM
929004129910	RS350 G2 RC Sq L100 2*15W 30K 24D 2H	+/-10%	(0.4357, 0.4017) <5SDCM
929004130010	RS350 G2 RC Sq L100 2*15W 30K 36D 2H	+/-10%	(0.4357, 0.4017) <5SDCM
929004130110	RS350 G2 RC Sq L100 2*15W 40K 24D 2H	+/-10%	(0.3779, 0.3683) <5SDCM
929004130210	RS350 G2 RC Sq L100 2*15W 40K 36D 2H	+/-10%	(0.3779, 0.3683) <5SDCM
929004130310	RS350 G2 RC Sq L100 2*23W 30K 24D 2H	+/-10%	(0.4357, 0.4017) <5SDCM
929004130410	RS350 G2 RC Sq L100 2*23W 30K 36D 2H	+/-10%	(0.4357, 0.4017) <5SDCM
929004130510	RS350 G2 RC Sq L100 2*23W 40K 24D 2H	+/-10%	(0.3779, 0.3683) <5SDCM
929004130610	RS350 G2 RC Sq L100 2*23W 40K 36D 2H	+/-10%	(0.3779, 0.3683) <5SDCM

Order Code	Full Product Name	Luminous flux tolerance	Initial chromaticity
929003214410	RS350 G2 RC Rd D55 4W 30K 24D 1H	+/-10%	(0.4369, 0.404) 5SDCM
929003214510	RS350 G2 RC Rd D55 4W 30K 36D 1H	+/-10%	(0.4369, 0.404) 5SDCM
929003214710	RS350 G2 RC Rd D55 4W 40K 24D 1H	+/-10%	(0.3804, 0.3767) 5SDCM
929003214810	RS350 G2 RC Rd D55 4W 40K 36D 1H	+/-10%	(0.3804, 0.3767) 5SDCM
929003215010	RS350 G2 RC Rd D55 7W 30K 24D 1H	+/-10%	(0.4369, 0.404) 5SDCM
929003215110	RS350 G2 RC Rd D55 7W 30K 36D 1H	+/-10%	(0.4369, 0.404) 5SDCM
929003215310	RS350 G2 RC Rd D55 7W 40K 24D 1H	+/-10%	(0.3804, 0.3767) 5SDCM
929003215410	RS350 G2 RC Rd D55 7W 40K 36D 1H	+/-10%	(0.3804, 0.3767) 5SDCM
929003219110	RS350 G2 RC Rd D100 23W 40K 50D 1H	+/-10%	(0.3732, 0.3641) 5SDCM
929004099110	RS350 G2 RC Rd D100 15W 30K 24D 1H	+/-10%	(0.4357, 0.4017) <5SDCM
929004099210	RS350 G2 RC Rd D100 15W 30K 36D 1H	+/-10%	(0.4357, 0.4017) <5SDCM
929004099410	RS350 G2 RC Rd D100 15W 40K 24D 1H	+/-10%	(0.3779, 0.3683) <5SDCM
929004099510	RS350 G2 RC Rd D100 15W 40K 36D 1H	+/-10%	(0.3779, 0.3683) <5SDCM
929003219310	RS350 G2 RC Sq L100 *2 30K 36D 2H	-	⟪ , 0.4341 ， , 0.3993 ⟫ 5SDCM
929003219410	RS350 G2 RC Sq L100 *2 40K 24D 2H	-	⟪ , 0.3732 ， , 0.3641 ⟫ 5SDCM
929003220810	RS350 G2 SF Sq L100 11W 30K 24D 1H	+/-10%	⟪ , 0.4341 ， , 0.3993 ⟫ 5SDCM
929003221010	RS350 G2 SF Sq L100 11W 40K 24D 1H	+/-10%	⟪ , 0.3732 ， , 0.3641 ⟫ 5SDCM
929003221210	RS350 G2 SF Sq L100 9W 30K 24D 1H	+/-10%	⟪ , 0.4369 ， , 0.404 ⟫ 5SDCM
929003221410	RS350 G2 SF Sq L100 9W 40K 24D 1H	+/-10%	⟪ , 0.3804 ， , 0.3767 ⟫ 5SDCM
929003225010	RS350 G2 SF Sq L80 7W 30K 24D 1H	+/-10%	⟪ , 0.4369 ， , 0.404 ⟫ 5SDCM
929003225210	RS350 G2 SF Sq L80 7W 40K 24D 1H	+/-10%	⟪ , 0.3804 ， , 0.3767 ⟫ 5SDCM
929003340210	RS350 G2 RC Rd D75 7W 27K 24D 1H	+/-10%	-
929003340410	RS350 G2 RC Rd D75 7W 35K 24D 1H	+/-10%	-
929003340510	RS350 G2 RC Rd D75 7W 35K 50D 1H	+15%/-5%	-
929003340610	RS350 G2 RC Rd D75 9W 27K 24D 1H	+/-10%	-
929003340810	RS350 G2 RC Rd D75 9W 35K 24D 1H	+/-10%	-
929003340910	RS350 G2 RC Rd D75 9W 35K 50D 1H	+15%/-5%	-
929003341010	RS350 G2 RC Rd D75 11W 27K 24D 1H	+/-10%	-
929003341210	RS350 G2 RC Rd D75 11W 35K 24D 1H	+/-10%	-
929003341310	RS350 G2 RC Rd D75 11W 35K 50D 1H	+15%/-5%	-
929003343410	RS350 G2 RC Rd D75 7W 27K 36D 1H	+/-10%	-
929003343510	RS350 G2 RC Rd D75 7W 35K 36D 1H	+/-10%	-
929003343610	RS350 G2 RC Rd D75 9W 27K 36D 1H	+/-10%	-
929003343710	RS350 G2 RC Rd D75 9W 35K 36D 1H	+/-10%	-
929003343810	RS350 G2 RC Rd D75 11W 27K 36D 1H	+/-10%	-
929003343910	RS350 G2 RC Rd D75 11W 35K 36D 1H	+/-10%	-

© 2026 Signify Holding. All rights reserved. The information provided herein is subject to change, without notice. Signify does not give any representation or warranty as to the accuracy or completeness of the information included herein and shall not be liable for any action in reliance thereon. The information presented in this document is not intended as any commercial offer and does not form part of any quotation or contract, unless otherwise agreed by Signify. Philips and the Philips Shield Emblem are registered trademarks of Koninklijke Philips N.V.