PHILIPS

WT202W LED6S NW PSU S3 PC

919515813253



Sturdy and Reliable versatile lighting solution

EnduraLED Bulkhead luminaire is a sustainable and reliable offering for indoor or semi-outdoor public area with IP66 ingress protection. The product offers two lumen packs with two different CCT's and suitable for verstalile applications such as staircases, industrial areas, circulation areas, lift wells etc. Pressure die cast housing and high imapact resistance polycarbonate cover make this bulkhead maintenance free solution for heavy duty industries.

Warnings and Safety

- Meant for Indoor Industrial Application Only.

General Information

Driver included	Yes
Light source engine type	LED
Warranty period	2 years

Light Technical

Luminous Flux	700 lm
Correlated Color Temperature (Nom)	4000 K
Luminous Efficacy (rated) (Nom)	110 lm/W
Color rendering index (CRI)	>80
Beam angle of light source	120 degree(s)
Light source color	840 neutral white
Optic type	Beam angle 120°
Luminaire light beam spread	120°

Operating and Electrical

Input Voltage	140-270 V
Line Frequency	50 Hz
Power Consumption	6 W
Power Factor (Fraction)	0.95
Protection class IEC	Safety class I
Surge Protection (Common/ Differential)	Surge protection level until 2.5 kV

Controls and Dimming

Dimmable	No

Mechanical and Housing

Housing Material	Aluminum die cast
Optic material	Polycarbonate
Optical cover material	Polycarbonate
Housing Color	Gray
Mounting device	Wall-mounting bracket
Material	Aluminum
Ingress protection code	IP66 [Dust penetration-protected, jet-proof]
Mech. impact protection code	IK09 [10 J]
Optical cover type	Polycarbonate
Net Weight (Piece)	0.409 kg

Approval and Application

Flammability mark	For mounting on normally flammable surfaces
Ambient temperature range	0 to +45 °C

Initial Performance (IEC Compliant)

Initial chromaticity	<5
Power consumption tolerance	+/-10%

Over Time Performance (IEC Compliant)

Median useful life L70B50	50,000 hour(s)

Product Data

Order product name	WT202W LED6S NW PSU S3 PC
Full product name	WT202W LED6S NW PSU S3 PC
Order code	919515813253
Material Nr. (12NC)	919515813253
Numerator - Quantity Per Pack	1
Numerator - Packs per outer box	10

Dimensional drawing

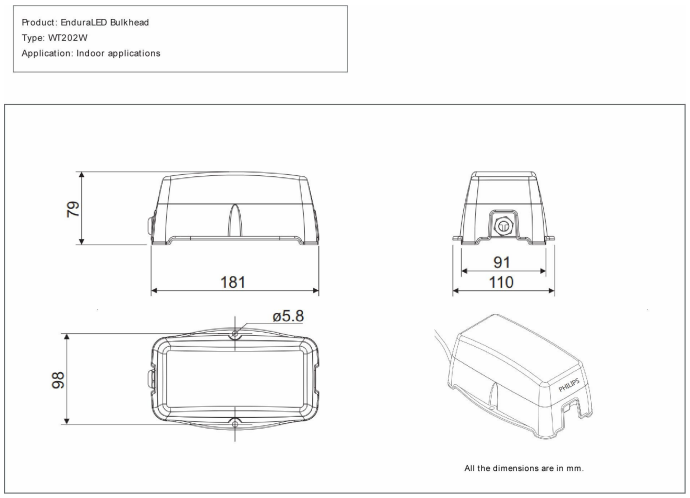

Related Documents

Documents and certificates	Document Name	Download
Installation Instructions	EnduraLED_Bulkhead-WT202W-INI.pdf	Download

Photometry and lighting design	Document Name	Download
IES File	EnduraLED_WT202W LED6S NW PSU S3 PC.ies	Download

© 2026 Signify Holding. All rights reserved. The information provided herein is subject to change, without notice. Signify does not give any representation or warranty as to the accuracy or completeness of the information included herein and shall not be liable for any action in reliance thereon. The information presented in this document is not intended as any commercial offer and does not form part of any quotation or contract, unless otherwise agreed by Signify. Philips and the Philips Shield Emblem are registered trademarks of Koninklijke Philips N.V.