YHP657 PL-EMB 3500 60 RAL

912401451708



Pole for embedded installation, 3.5 m, 135 mm, RAL color

Metronomis LED is the first post-top range in the world to offer a palette of environmental lighting effects to give projects a unique contextual or aesthetic touch. An innovative play of reflection, light and shadow creates an environmental pattern on the ground or on the bowl to create additional ambience. Four new iconic designs – with a visual and modular link to Metronomis I – are reduced to the essential elements. During the day, the discreet, transparent design blends into its context, be it contemporary or classical, while its night-time appearance is both functional and decorative. The flexible, modular Metronomis LED comes with a range of columns and a wide variety of optics and effects, enabling architects and lighting designers to create a unified, consistent lighting design that still reflects the differences in urban culture and history. Offers exceptional visual comfort while also optimizing safety

Mechanical and Housing

Fixation diameter	Mounting device diameter 60 mm
Pole top diameter	135 mm
Pole height	3.5 m
Pole color	RAL color
Pole type	Pole for embedded installation
Net Weight (Piece)	22.500 kg

Approval and Application

CE mark	Yes
EU RoHS compliant	Yes

Sustainability Data

Non-virgin material ratio of the packaging	Cardboard > 80% recycled
Packaging Recyclable content ratio	Cardboard recycling rate > 80%
Packaging Material	Cardboard

Product Data

Order product name	YHP657 PL-EMB 3500 60 RAL
Full product name	YHP657 PL-EMB 3500 60 RAL
Full product code	871869938356500
Order code	912401451708
Material Nr. (12NC)	912401451708
Numerator - Quantity Per Pack	1
EAN/UPC - Product/Case	8718699383565
Numerator - Packs per outer box	1
EAN/UPC - Case	8718699383565

Dimensional drawing

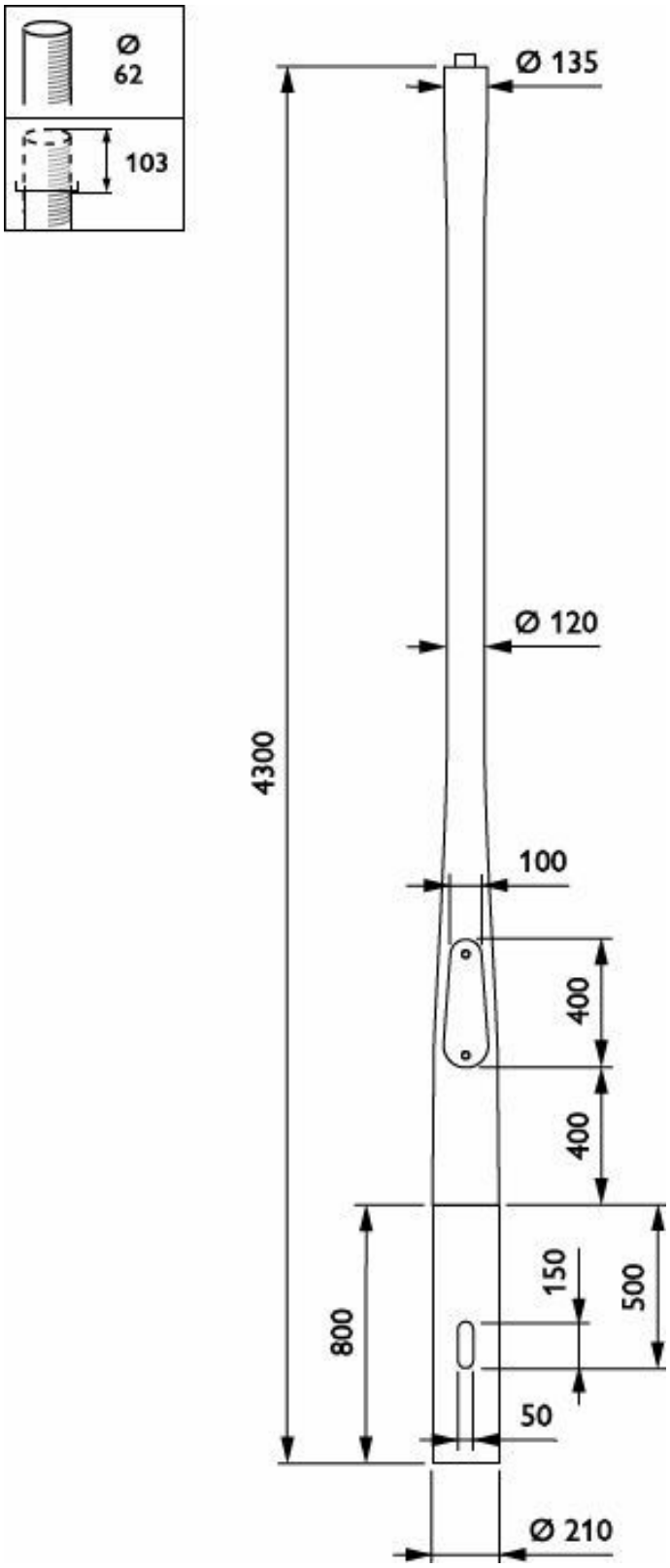

© 2026 Signify Holding. All rights reserved. The information provided herein is subject to change, without notice. Signify does not give any representation or warranty as to the accuracy or completeness of the information included herein and shall not be liable for any action in reliance thereon. The information presented in this document is not intended as any commercial offer and does not form part of any quotation or contract, unless otherwise agreed by Signify. All trademarks are owned by Signify Holding or their respective owners.